SONY

DIGITAL VIDEO SWITCHER

DVS-6000/6000C

SWITCHER CONTROL PANEL

BKDS-6010

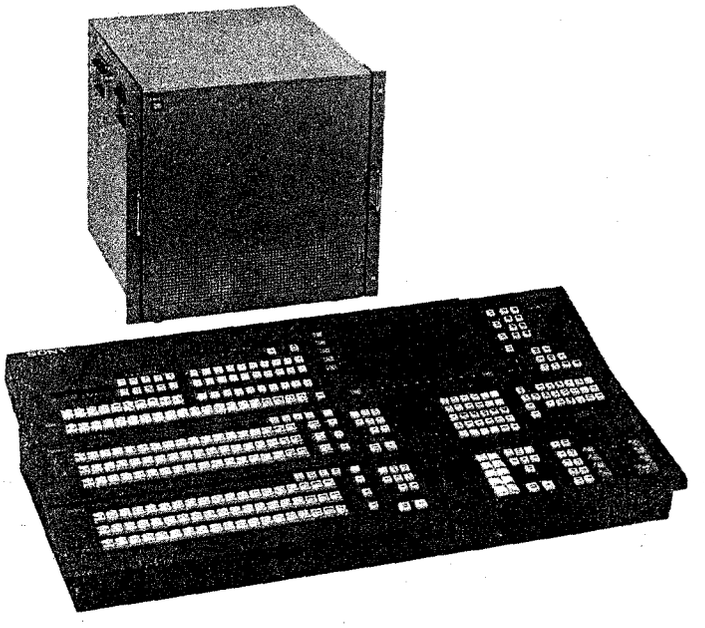

BKDS-6050 BKDS-6060 BKDS-6061 BKDS-6062
BKDS-6063 BKDS-6064 BKDS-6070 BKDS-6071
BKDS-6072 BKDS-6090 BKDS-8022

INSTALLATION AND MAINTENANCE MANUAL Part 2
1st Edition
Serial No. 10001 and Higher

For customers in the U.S.A.

WARNING

This equipment has been tested and found to comply with the limits for a Class A digital device, pursuant to Part 15 of the FCC Rules. These limits are designed to provide reasonable protection against harmful interference when the equipment is operated in a commercial environment. This equipment generates, uses, and can radiate radio frequency energy and, if not installed and used in accordance with the instruction manual, may cause harmful interference to radio communications. Operation of this equipment in a residential area is likely to cause harmful interference in which case the user will be required to correct the interference at his own expense.

You are cautioned that any changes or modifications not expressly approved in this manual could void your authority to operate this equipment.

The shielded interface cable recommended in this manual must be used with this equipment in order to comply with the limits for a digital device pursuant to Subpart B of Part 15 of FCC rules.

This symbol is intended to alert the user to the presence of important operating and maintenance (servicing) instructions in the literature accompanying the appliance.

WARNING
For the customers in the U.S.A.

Changing the voltage selector may require the use of a different line cord or attachment plug, or both. To reduce the risk of fire or electric shock, refer servicing to qualified service personnel.

For the customers in Canada
This apparatus complies with the Class A limits for radio noise emissions set out in radio interference regulations.

Pour les utilisateurs au Canada
Cet appareil est conforme aux normes Classe A, pour bruits radioélectriques. Tel que spécifiér dans le reglement sur le brouillage radioélectrique.

Bescheinigung des Herstellers
Hiermit wird bescheinigt, daß die Digital-Video-Schalteinheit DVS-6000C in Übereinstimmung mit den Bestimmungen der BMPT-Amtsblatt Vfg 243/1991 und Vfg 46/1992 funkenstört ist. Der vorschriftsmäßige Betrieb mancher Geräte (z.B.Meßsender) kann allerdings gewissen Einschränkungen unterliegen. Beachten Sie deshalb die Hinweise in der Bedienungsanleitung. Dem Bundesamt für Zulassungen in der Telekommunikation wurde das inverkehrbringen dieses Gerätes angezeigt und die Berechtigung zur Überprüfung der Serie auf Einhaltung der Bestmmungen eingeräumt.

Sony Deutschland GmbH
Hugo Eckener Str 20
D-5000 Köin 30

Hinweis
Gemäß der Amtsblätter des BMPT Nm. 61/1991 und 6/1992 wird der Betreiber darauf aufmerksam gemacht, daß die von ihm mit diesem Gerät zusammengestellte Anlage auch den technischen Bestimmungen dieser Amtsblätter genügen muß.

SAFETY CHECK-OUT

After correcting the original service problem, perform the following safety checks before releasing the set to the customer:

Check the metal trim, "metallized" knobs, screws, and all other exposed metal parts for AC leakage. Check leakage as described below.

LEAKAGE TEST

The AC leakage from any exposed metal part to earth ground and from all exposed metal parts to any exposed metal part having a return to chassis, must not exceed 3.5mA. Leakage current can be measured by any one of three methods.

1. A commercial leakage tester, such as the Simpson 229 or RCA WT-540A. Follow the manufacturers' instructions to use these instruments.
2. A battery-operated AC milliammeter. The Data Precision 245 digital multimeter is suitable for this job.
3. Measuring the voltage drop across a resistor by means of a VOM or battery-operated AC voltmeter. The "limit" indication is 5.25V so analog meters must have an accurate low-voltage scale. The Simpson 250 and Sanwa SH-63Trd are examples of a passive VOM that is suitable. Nearly all battery operated digital multimeters that have a 20V AC range are suitable. (See Fig. A)

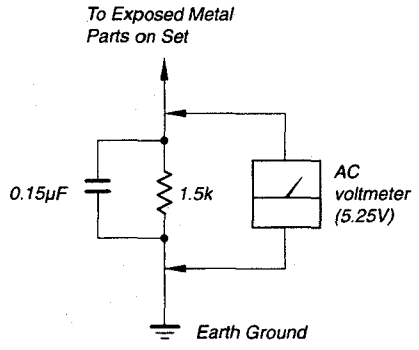

Fig. A. Using an AC voltmeter to check AC leakage.

このマニュアルに記載されている事柄の著作権は当社にあり、説明内容は機器購入者の使用を目的としています。
従って、当社の許可なしに無断で複写したり、説明内容(操作、保守等)と異なる目的で本マニュアルを使用することを禁止します。

The material contained in this manual consists of information that is the property of Sony Corporation and is intended solely for use by the purchasers of the equipment described in this manual.
Sony Corporation expressly prohibits the duplication of any portion of this manual or the use thereof for any purpose other than the operation or maintenance of the equipment described in this manual without the express written permission of Sony Corporation.

Le matériel contenu dans ce manuel consiste en informations qui sont la propriété de Sony Corporation et sont destinées exclusivement à l'usage des acquéreurs de l'équipement décrit dans ce manuel.
Sony Corporation interdit formellement la copie de quelque partie que ce soit de ce manuel ou son emploi pour tout autre but que des opérations ou entretiens de l'équipement à moins d'une permission écrite de Sony Corporation.

Das in dieser Anleitung enthaltene Material besteht aus Informationen, die Eigentum der Sony Corporation sind, und ausschließlich zum Gebrauch durch den Käufer der in dieser Anleitung beschriebenen Ausrüstung bestimmt sind.
Die Sony Corporation untersagt ausdrücklich die Vervielfältigung jeglicher Teile dieser Anleitung oder den Gebrauch derselben für irgendeinen anderen Zweck als die Bedienung oder Wartung der in dieser Anleitung beschriebenen Ausrüstung ohne ausdrückliche schriftliche Erlaubnis der Sony Corporation.

このマニュアルについて

本書の目的

本書はデジタルビデオスイッチャDVS-6000/6000Cとその別売アクセサリのBKDS-6010などのインストレーション・アンド・メンテナンスマニュアル　パート2です。
本書はサービスエンジニアの方々にご使用していただくことを想定し、本機の部品レベルまでのサービスを前提とした情報(調整要項、回路図、マウント図、詳細パーツリスト等)を記載しています。

構成

本書の構成を把握していただくために、全章の概略を以下に説明します。

インストレーション・アンド・メンテナンスマニュアル　パート2
第1章／SEC. 1　電気調整／ELECTRICAL ALIGNMENT
プリント基板内の部品交換をした場合などで、基板を調整する必要が生じた場合に、パーソナルコンピュータを使用した調整方法を説明しています。
SEC. 2　BLOCK DIAGRAMS(DVS-6000/6000C)
本機全体および、プリント基板ごとの機能構成をまとめて掲載しています。
SEC. 3　SCHEMATIC DIAGRAMS(DVS-6000/6000C)
全プリント基板の回路図を概ね、スロットの順番で掲載しています。マザー基板とフレーム回路図は、本章の最後の部分にあります。
SEC. 4 BOARD LAYOUTS(DVS-6000/6000C)
全プリント基板のパターンとシンボル図を、回路図と概ね同じ順で掲載しています。
SEC. 5　BLOCK DIAGRAM(BKDS-6010)
プリント基板ごとの機能構成をまとめて掲載しています。
SEC. 6 SCHEMATIC DIAGRAMS(BKDS-6010)
全プリント基板の回路図をアルファベット順で掲載しています。フレーム回路図は、本章の最後の部分にあります。
SEC.7 BOARD LAYOUTS(BKDS-6010)
全プリント基板のパターンとシンボル図を、回路図と概ね同じ順で掲載しています。
SEC. 8 SEMICONDUCTOR PIN ASSIGNMENTS
使用半導体の外形、およびＩＣについては概略の機能ブロックや、ピン名称を掲載しています。
SEC.9 SPARE PARTS AND FIXTURES
使用部品のうち、サービス対象に指定されている部品や、必要な工具類などを掲載しています。

インストレーション・アンド・メンテナンスマニュアル　パート1
第1章　取り扱い操作
第2章　設置
第3章　サービスインフォメーション
第4章　主要部品の交換(BKDS-6010)
第5章　トラブルシューティング(BKDS-6010)
第6章　SPARE PARTS AND FIXTURES FOR USERS

関連マニュアル

本機にはこの「インストレーション・アンド・メンテナンスマニュアル　パート2」の他に下記のマニュアルが用意されています。

- ユーザーガイド(BZS-6010に付属しています。)
  本機を実際に運用および操作するのに必要なマニュアルです。
- インストレーション・アンド・メンテナンスマニュアル　パート1(本機に付属しています。)
  本機の納入設定時に必要な項目、点検および保守に関する情報、主なブロックおよび基板交換によるサービスを前提とした情報を記載したマニュアルです。

Introducing this manual;

Purpose of this manual

This manual is the Installation and Maintenance Manual Part2 of the digital video switcher model DVS-6000/6000C and the optional accessory model BKDS-6010 and so on.
This manual is intended for service engineers and contains the information(alignment, schematic diagrams, board layouts and parts list) required for servicing by component(s).

Contents:

Installation and Maintenance Manual Part2

Section 1. ELECTRICAL ALIGNMENT
Describes the alignment procedure using personal computer, of circuit board needed in such a case when replacing component(s) of a printed circuit board.*This section is going to be published as supplement shortly.
Section 2. BLOCK DIAGRAMS(DVS-6000/6000C)
Describes functions of entire machine and of each circuit board in the form of block diagrams.
Section 3. SCHEMATIC DIAGRAMS(DVS-6000/6000C)
Describes schematic diagrams of all printed circuit board in the order of slot numbers. Mother board and frame schematic diagrams are shown in the end of this section.
Section 4. BOARD LAYOUTS(DVS-6000/6000C)
Printed circuit pattern of all circuit boards and their printed symbols are shown in the almost same order of schematic diagrams.
Section 5. BLOCK DIAGRAMS(BKDS-6010)
Describes functions of each circuit board in the form of block diagrams.
Section 6. SCHEMATIC DIAGRAMS(BKDS-6010)
Describes schematic diagrams of all printed circuit board in the alphabetical order. Frame schematic diagram is shown in the end of this section.
Section 7. BOARD LAYOUTS(BKDS-6010)
Printed circuit pattern of all circuits boards and their printed symbols are shown in the almost same order of schematic diagrams.

Installation and Maintenance Manual Part1

Section 1. OPERATION
Section 2. INSTALLATION
Section 3. SERVICE INFORMATION
Section 4. REPLACEMENT OF MAIN PARTS(BKDS-6010)
Section 5. TROUBLE SHOOTING(BKDS-6010)
Section 6. SPARE PARTS AND FIXTURES FOR USERS

Related manuals

In addition to this Installation and Maintenance Manual Part2, a Guide and a Manual are provided.

- User's Guide (which is packed together with BZS-6020.)
  This Guide explains how to operate this equipment.
- Installation and Maintenance Manual Part1 (which is packed together with the unit.)
  This Manual contains the information required for initial installation, for check and maintenance and for servicing by block replacement and/or circuit board replacement.

目次
TABLE OF CONTENTS

1. 電気調整
(近日発行)

1. ELECTRICAL ALIGNMENT
(Section 1 will be available)

DVS-6000/6000C
2. BLOCK DIAGRAMS
OVERALL Block (DVS-6000) 2-1
OVERALL Block (DVS-6000C) 2-2
CPU-147 Block 2-3
CPU
SG-210 Block 2-4
D-2 Sync Generator: DVS-6000 Only
SG-211 Block 2-5
D-1 Sync Generator: DVS-6000C Only
SD-30 Block 2-6
Digital Edit PVW/REF Output (BKDS-6060)
DA-71 Block 2-7
Analog Edit PVW/REF Output (BKDS-6061)
: DVS-6000 Only
DA-72 Block 2-8
Analog Edit PVW/REF Output (BKDS-6062)
: DVS-6000C Only
WKG-10 Block 2-9
Wipe Generator
WP-37 Block 2-9
Enhanced Wipe Generator (BKDS-6070)
KPC-5 Block 2-10
Key Processor
BD-22 Block 2-10
Key Border Generator (BKDS-6071)
MIX-8/8A Block 2-11
Mixer
DSK-9/9A Block 2-12
DSK
OUT-3 Block 2-13
Output Processor
SD-31 Block 2-14
Digital Edit PVW/REF Output (BKDS-6063)
DA-73 Block 2-15
Analog Output (BKDS-6064): DVS-6000 Only
MAT-4 Block 2-16
Matte Generator
MT-9 Block 2-16
BKGD Color Mix Generator (BKDS-6072)
XPT-3 Block 2-17
Digital Input (BKDS-8022)
RE-96 Block 2-18
Power Supply AC-DC

3. SCHEMATIC DIAGRAMS
CPU-147 Board 3-3
CPU
SG-210 Board 3-9
D-2 Sync Generator: DVS-6000 Only
SG-211 Board 3-13
D-1 Sync Generator: DVS-6000C Only
LE-118 Board 3-17
LED
SD-30 Board 3-19
Digital Edit PVW/REF Output (BKDS-6060)
DA-71 Board 3-23
Analog Edit PVW/REF Output (BKDS-6061)
: DVS-6000 Only
DA-72 Board 3-27
Analog Edit PVW/REF Output (BKDS-6062)
: DVS-6000C Only
WKG-10 Board 3-31
Wipe Generator
WP-37 BOARD 3-39
Enhanced Wipe Generator (BKDS-6070)
KPC-5 Board 3-45
Key Processor
BD-22 Board 3-51
Key Border Generator (BKDS-6071)
MIX-8 Board 3-53
Mixer
DSK-9 Board 3-59
DSK
OUT-3 Board 3-67
Output Processor
SD-31 Board 3-71
Digital Edit PVW/REF Output (BKDS-6063)
DA-73 Board 3-73
Analog Output (BKDS-6064): DVS-6000 Only
MAT-4 Board 3-75
Matte Generator
MT-90 Board 3-77
BKGD Color Mix Generator (BKDS-6072)
XPT-3 Board 3-79
Digital Input (BKDS-8022)
CN-311 Board 3-83
Output Connector
CN-503 Board 3-83
Chroma Key Input Connector: DVS-6000 Only
CN-312 (A, B) Board 3-85
Primary Input Connector
CN-843 Board 3-87
Control Connector
MB-482 Board 3-89
Mother
RE-96 Board 3-97
Power Supply AC-DC
FRAME 3-99
LE-76
Power LED

4. BOARD LAYOUTS
CPU-147 Board 4-2
CPU
SG-210 Board 4-4
D-2 Sync Generator: DVS-6000 Only
SG-211 Board 4-6
D-1 Sync Generator: DVS-6000C Only
LE-118 Board 4-9
LED

SD-30 Board 4-10
Digital Edit PVW/REF OUTPUT (BKDS-6060)
DA-71 Board 4-12
Analog Edit PVW/REF OUTPUT (BKDS-6061)
: DVS-6000 Only
DA-72 Board 4-14
Analog Edit PVW/REF OUTPUT (BKDS-6062)
: DVS-6000C Only
WKG-10 Board 4-16
Wipe Generator
WP-37 BOARD 4-18
Enhanced Wipe Generator (BKDS-6070)
KPC-5 Board 4-20
Key Processor
BD-22 Board 4-23
Key Border Generator (BKDS-6071)
MIX-8 Board 4-24
Mixer
DSK-9 Board 4-26
DSK
OUT-3 Board 4-28
Output Processor
DA-73 Board 4-31
Analog Output (BKDS-6064): DVS-6000 Only
MAT-4 Board 4-32
Matte Generator
MT-90 Board 4-35
BKGD Color Mix Generator (BKDS-6072)
XPT-3 Board 4-36
Digital Input (BKDS-8022)
CN-311 Board 4-38
Output Connector
CN-503 Board 4-39
Chroma Key Input Connector: DVS-6000 Only
CN-312 Board 4-40
Primary Input Connector
CN-843 Board 4-41
Control Connector
MB-482 Board 4-42
Mother
LE-76 Board 4-44
Power LED
RE-96 Board 4-44
Power Supply AC-DC

BKDS-6010

5. BLOCK DIAGRAM

CPU-131 Block 5-1
System Control
IF-403 (A, B) Block 5-4
Switch Interface (for KY-239)
KY-238 Block 5-4
Switch
KY-239 (A, B) Block 5-4
Switch
IF-404 (A, B) Block 5-5
Switch Interface (for KY-243)
KY-243 Block 5-5
Switch
KY-244 Block 5-5
Switch (for BKDS-6050)
KY-245 Block 5-5
Switch
KY-246 Block 5-5
Switch
KY-240 Block 5-6
Switch
KY-241 Block 5-6
Switch
KY-242 Block 5-6
Switch

6. SCHEMATIC DIAGRAMS

CPU-131 Board 6-3
System Control
IF-403 (A, B) Board 6-9
Switch Interface (for KY-239)
IF-404 (A, B) Board 6-12
Switch Interface (for KY-243)
IF-418 Board 6-15
Interface (BKDS-6050)
KY-238 Board 6-17
Switch
KY-239 (A, B) Board 6-19
Switch
KY-240 Board 6-21
Switch
KY-243 Board 6-25
Switch
LE-113 Board 6-25
LED
LE-114 Board 6-25
LED
KY-244 Board 6-27
Switch (for BKDS-6050)
LE-115 Board 6-27
LED
KY-245 Board 6-29
Switch
KY-246 Board 6-29
Switch
FRAME 6-31
CN-789
Connector
CN-790
Connector
KY-241
Switch
KY-242
Switch
LE-111
LED
LE-112
LED

7. BOARD LAYOUTS

CPU-131 Board 7-2
System Control
IF-403 (A, B) Board 7-4
Switch Interface (for KY-239)
IF-404 (A, B) Board 7-6
Switch Interface (for KY-243)
IF-418 Board 7-9
Interface (BKDS-6050)
KY-238 Board 7-10
Switch
KY-239 (A, B) Board 7-12
Switch
KY-240 Board 7-14
Switch
KY-241 Board 7-16
Switch
KY-242 Board 7-17
Switch
KY-243 Board 7-18
Switch
KY-244 Board 7-21
Switch (for BKDS-6050)
KY-245 Board 7-22
Switch
KY-246 Board 7-24
Switch
LE-111 Board 7-25
LED
LE-112 Board 7-25
LED
LE-113 Board 7-25
LED
LE-114 Board 7-26
LED
LE-115 Board 7-26
LED
CN-789 Board 7-27
LED
CN-790 Board 7-28
LED

8. SEMICONDUCTOR PIN ASSIGNMENTS

9. SPARE PARTS

9-1. NOTES ON SPARE PARTS 9-1
9-2. EXPLODED VIEW AND PARTS
(DVS-6000/6000C) 9-2
CHASSIS 1 9-2
CHASSIS 2 9-4
POWER UNIT 9-6
REAR PANEL 9-8
9-3. EXPLODED VIEW AND PARTS (BKDS-6010) 9-10
CHASSIS, POWER UNIT & REAR PANEL 9-10
OPERATION UNIT 1 9-12
OPERATION UNIT 2 9-14
OPERATION UNIT 3 9-16
OPERATION UNIT 4 9-18
OPERATION UNIT 5 (BKDS-6050) 9-20
9-4. ELECTRICAL PARTS LIST 9-23
9-5. PACKING MATERIALS &
SUPPLIED ACCESSORIES 9-66
(For DVS-6000/6000C)
9-6. PACKING MATERIALS &
SUPPLIED ACCESSORIES 9-67
(For BKDS-6010)
9-7. OPTIONAL FIXTURE 9-67

DVS-6000/6000C

BKDS-6060(OPTION)
BKDS-6061(OPTION)
BKDS-6062(OPTION)
BKDS-6063(OPTION)
BKDS-6064(OPTION)
BKDS-6070(OPTION)
BKDS-6071(OPTION)
BKDS-6072(OPTION)
BKDS-6090(OPTION)
BKDS-8022(OPTION)

SECTION 2. BLOCK DIAGRAMS
SECTION 3. SCHEMATIC DIAGRAMS
SECTION 4. BOARD LAYOUTS

BKDS-6010

BKDS-6050(OPTION)

SECTION 5. BLOCK DIAGRAMS
SECTION 6. SCHEMATIC DIAGRAMS
SECTION 7. BOARD LAYOUTS

DVS-6000/6000C

BKDS-6010(OPTION)
BKDS-6050(OPTION)
BKDS-6060(OPTION)
BKDS-6061(OPTION)
BKDS-6062(OPTION)
BKDS-6063(OPTION)
BKDS-6064(OPTION)
BKDS-6070(OPTION)
BKDS-6071(OPTION)
BKDS-6090(OPTION)
BKDS-8022(OPTION)

SECTION 8. SEMICONDUCTOR PIN ASSIGNMENTS
SECTION 9. SPEAR PARTS

SECTION 2
BLOCK DIAGRAMS

OVERALL (DVS-6000)

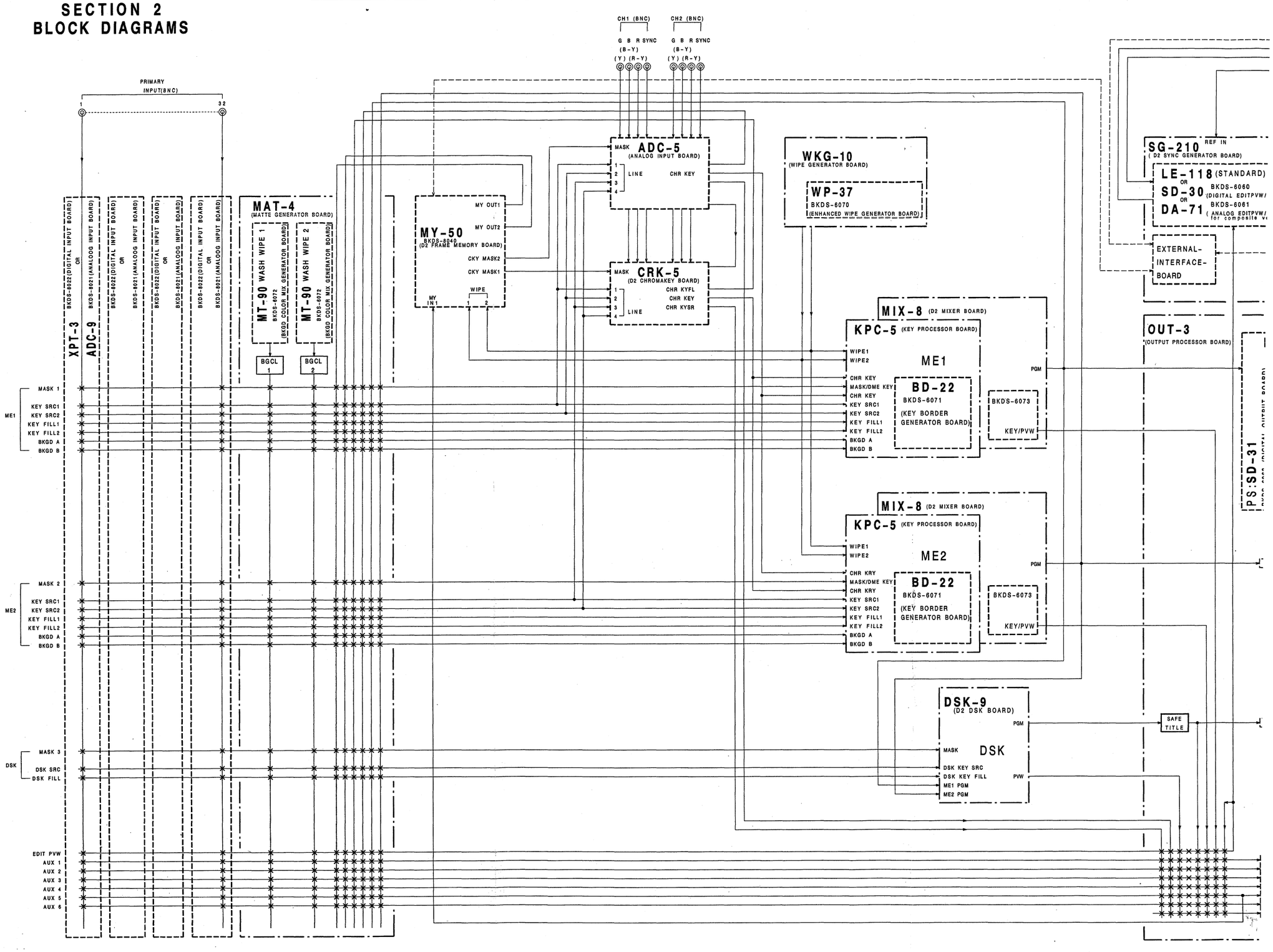

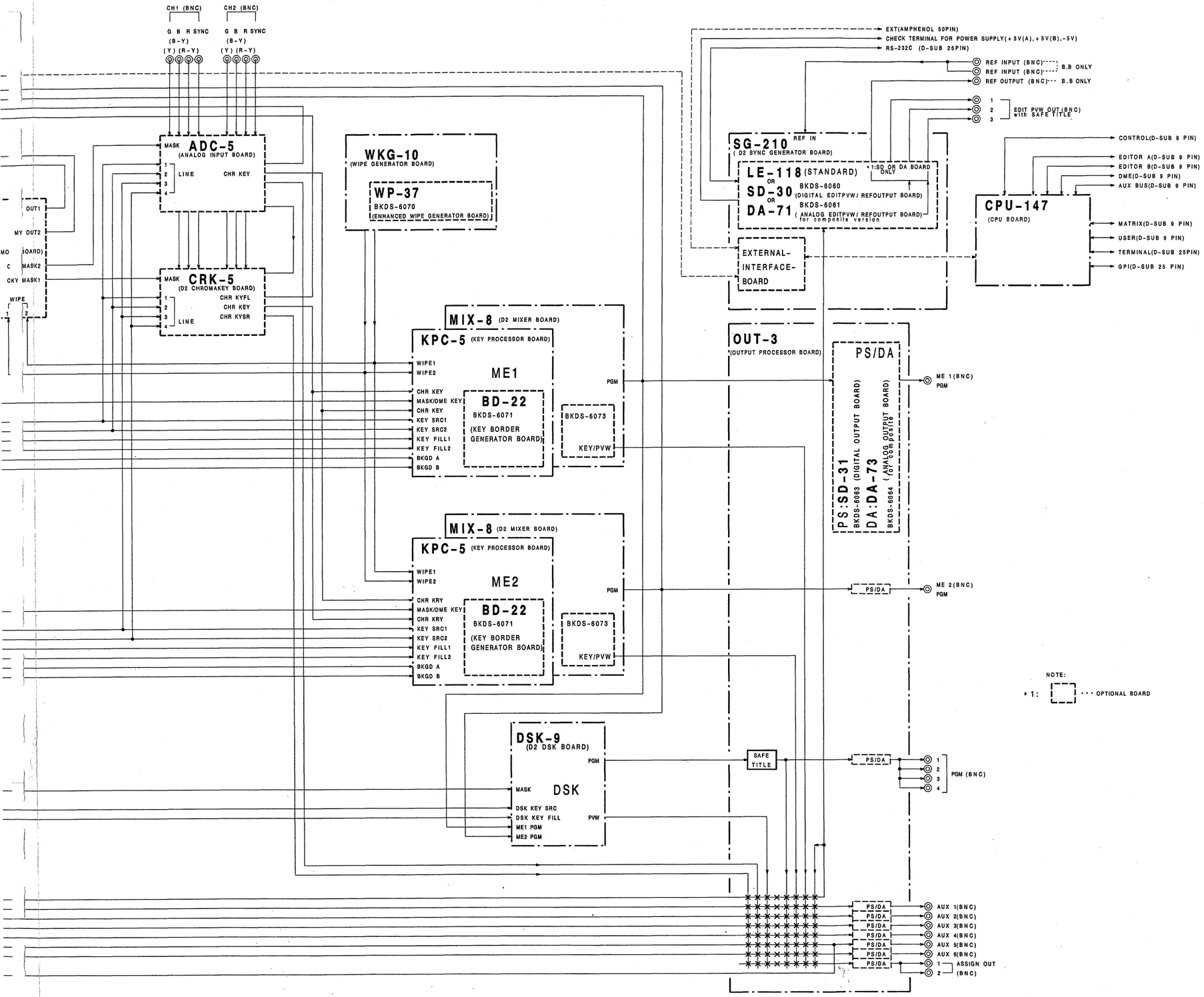

OVERALL
DVS-6000

OVERALL (DVS-6000C)

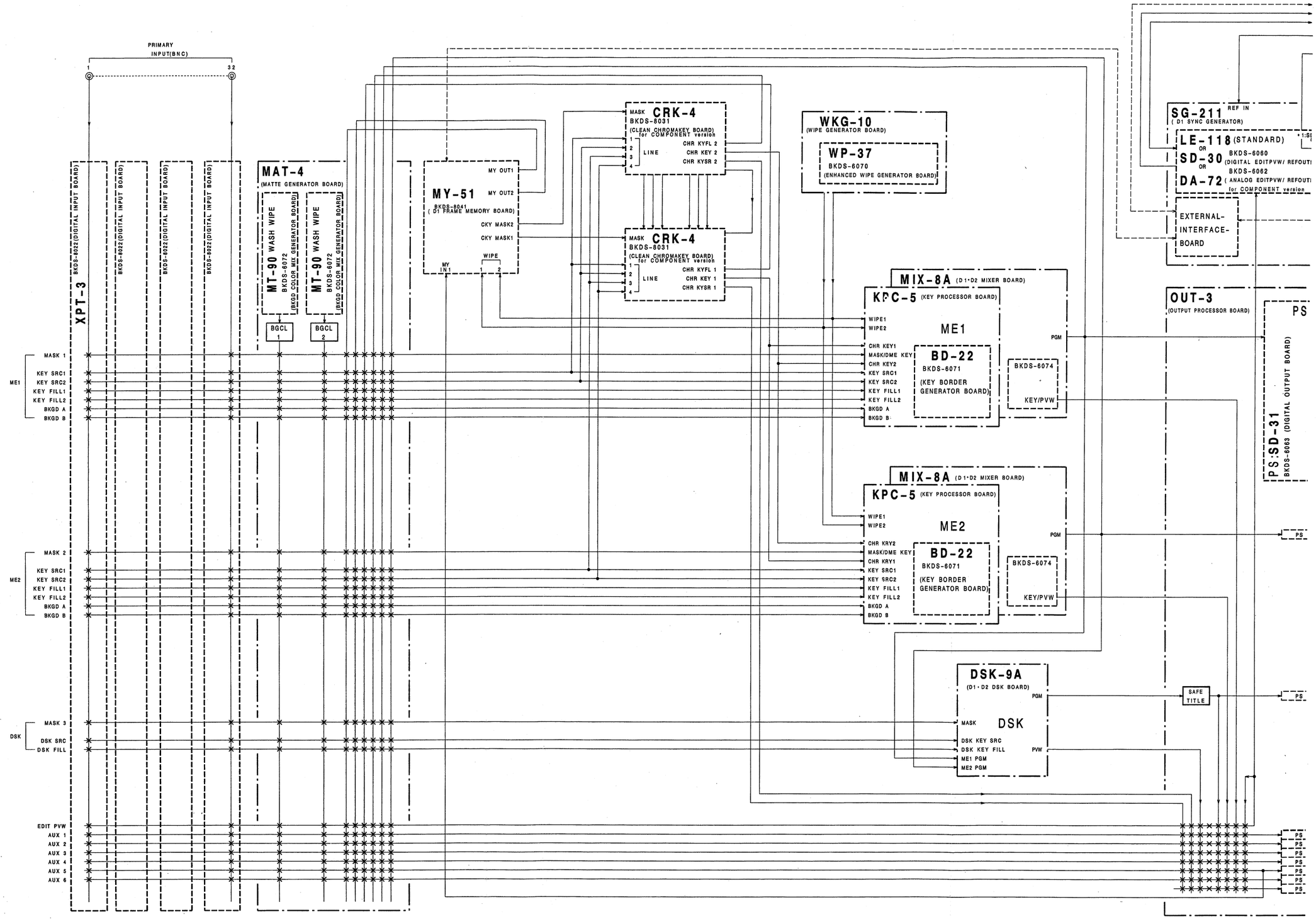

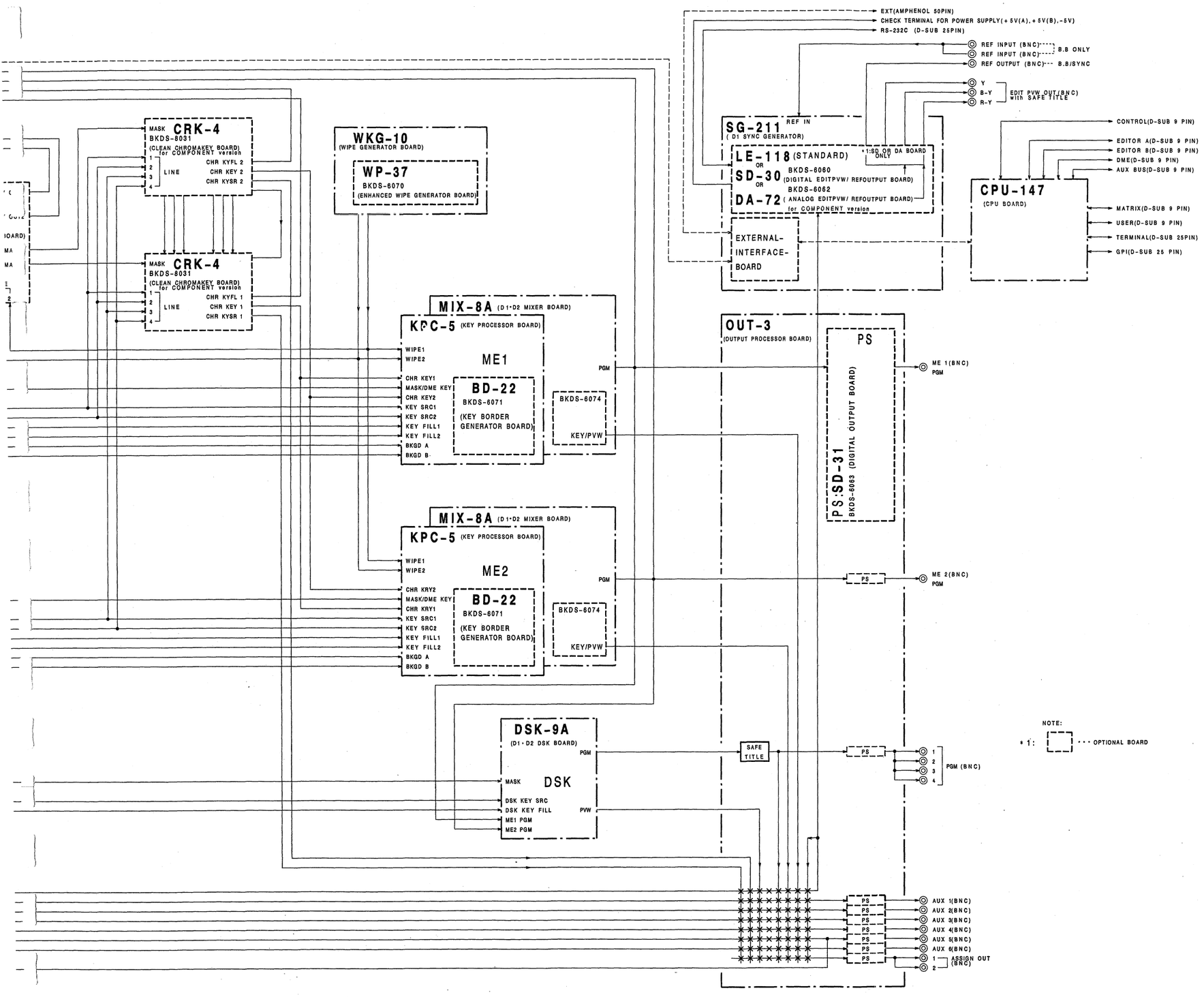

OVERALL
DVS-6000C

CPU-147 ; CPU BOARD

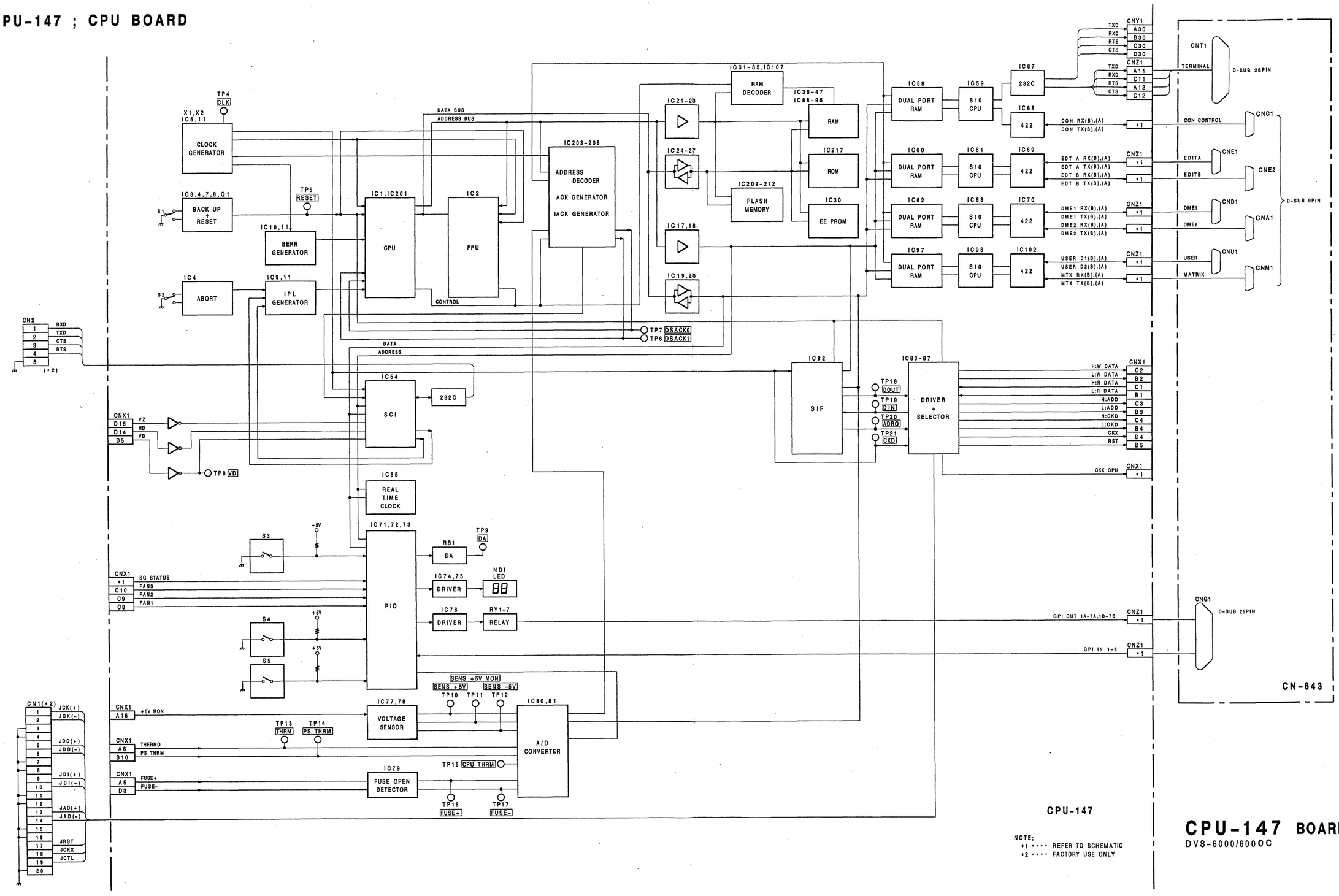

CPU-147

NOTE;
*1 .... REFER TO SCHEMATIC
*2 .... FACTORY USE ONLY

CPU-147 BOARD
DVS-6000/6000C

SG-210 ; D-2 SYNC GENERATOR BOARD

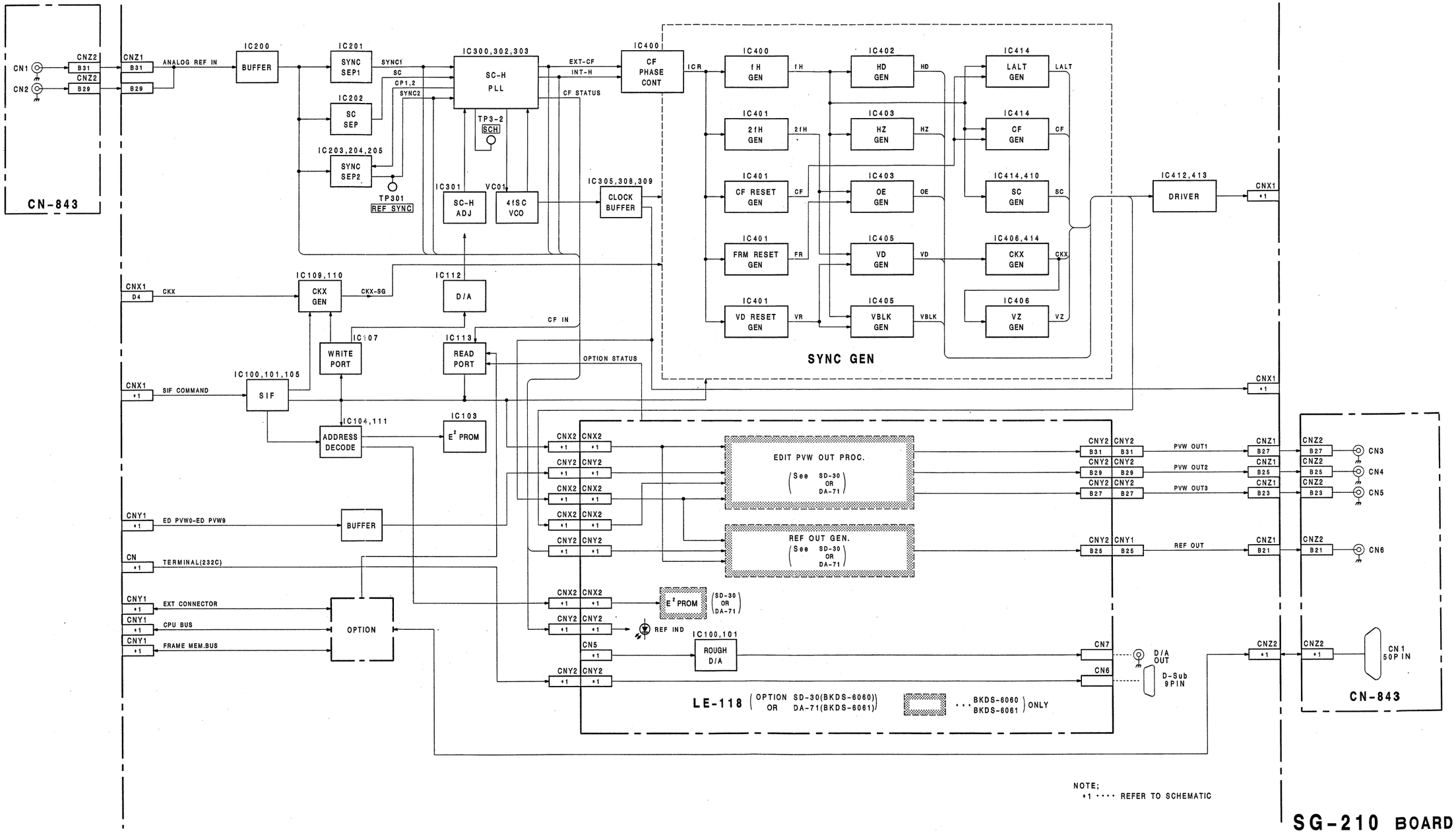

SG-210 BOARD
DVS-6000

2-4

SG-211 ; D-1 SYNC GENERATOR BOARD

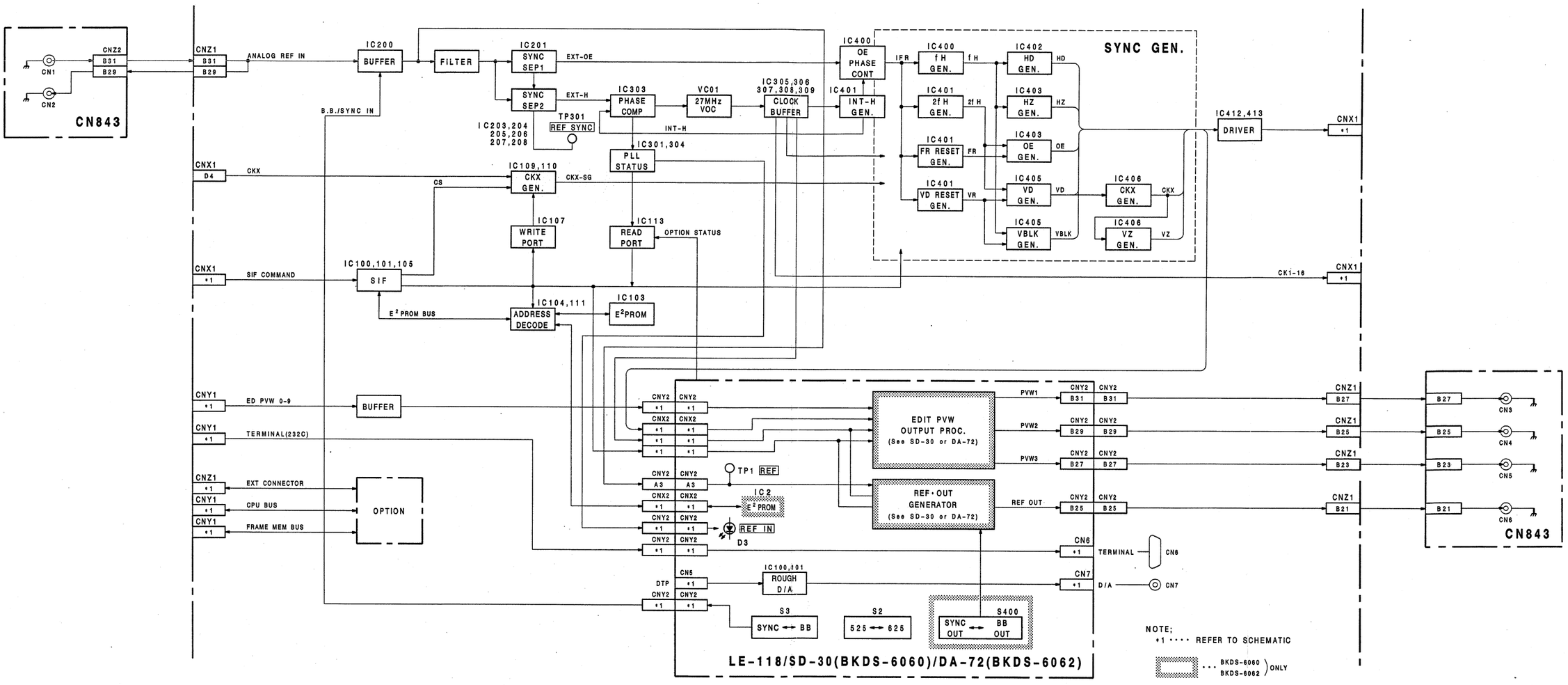

SG-211 BOARD
DVS-6000C

2-5

SD-30(BKDS-6060) ; DIGITAL EDIT PVW/REF OUTPUT BOARD

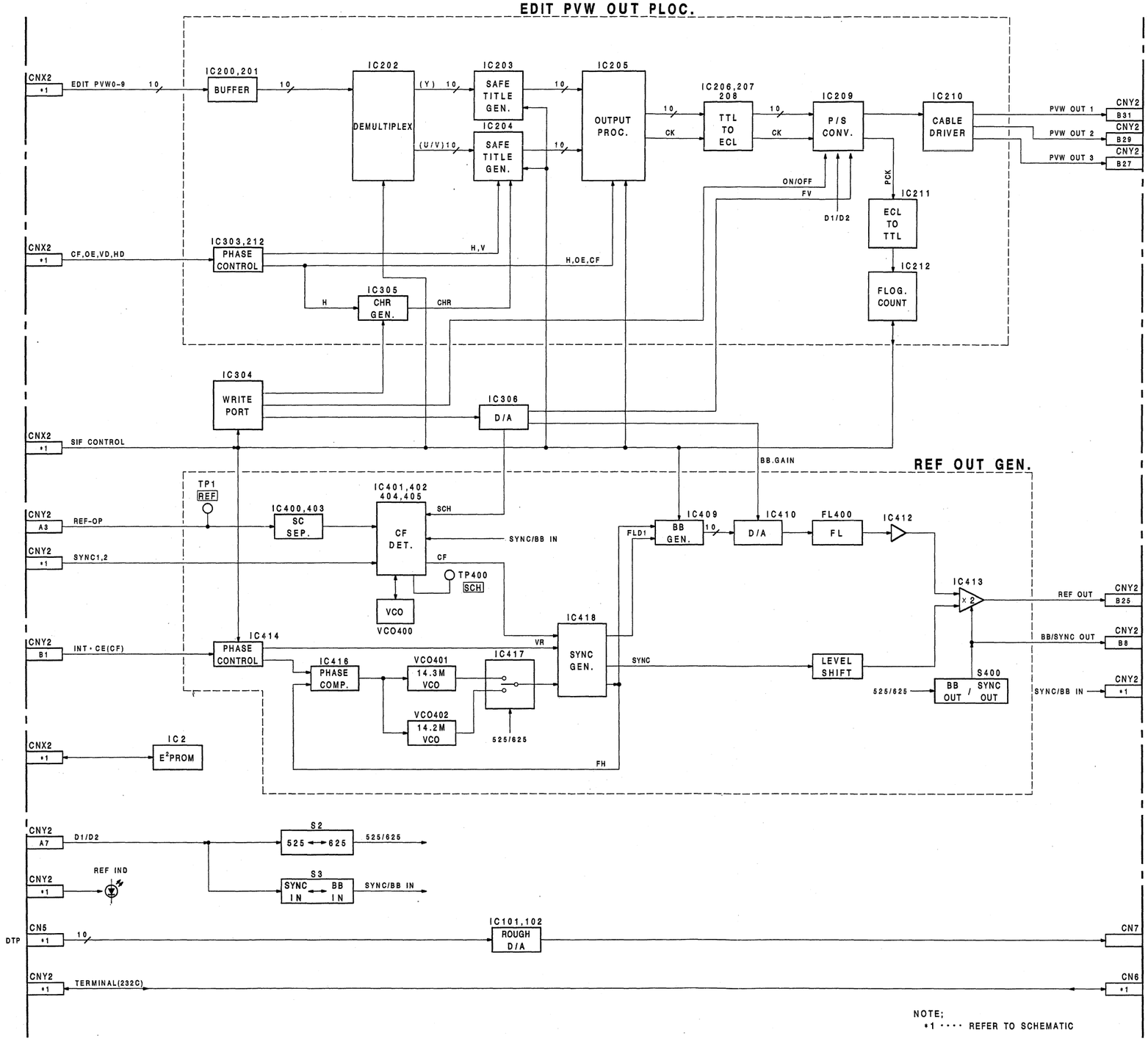

SD-30 BOARD
BKDS-6060

2-6

DA-71(BKDS-6061) ; ANALOG EDIT PVW/REF OUTPUT BOARD : DVS-6000 ONLY

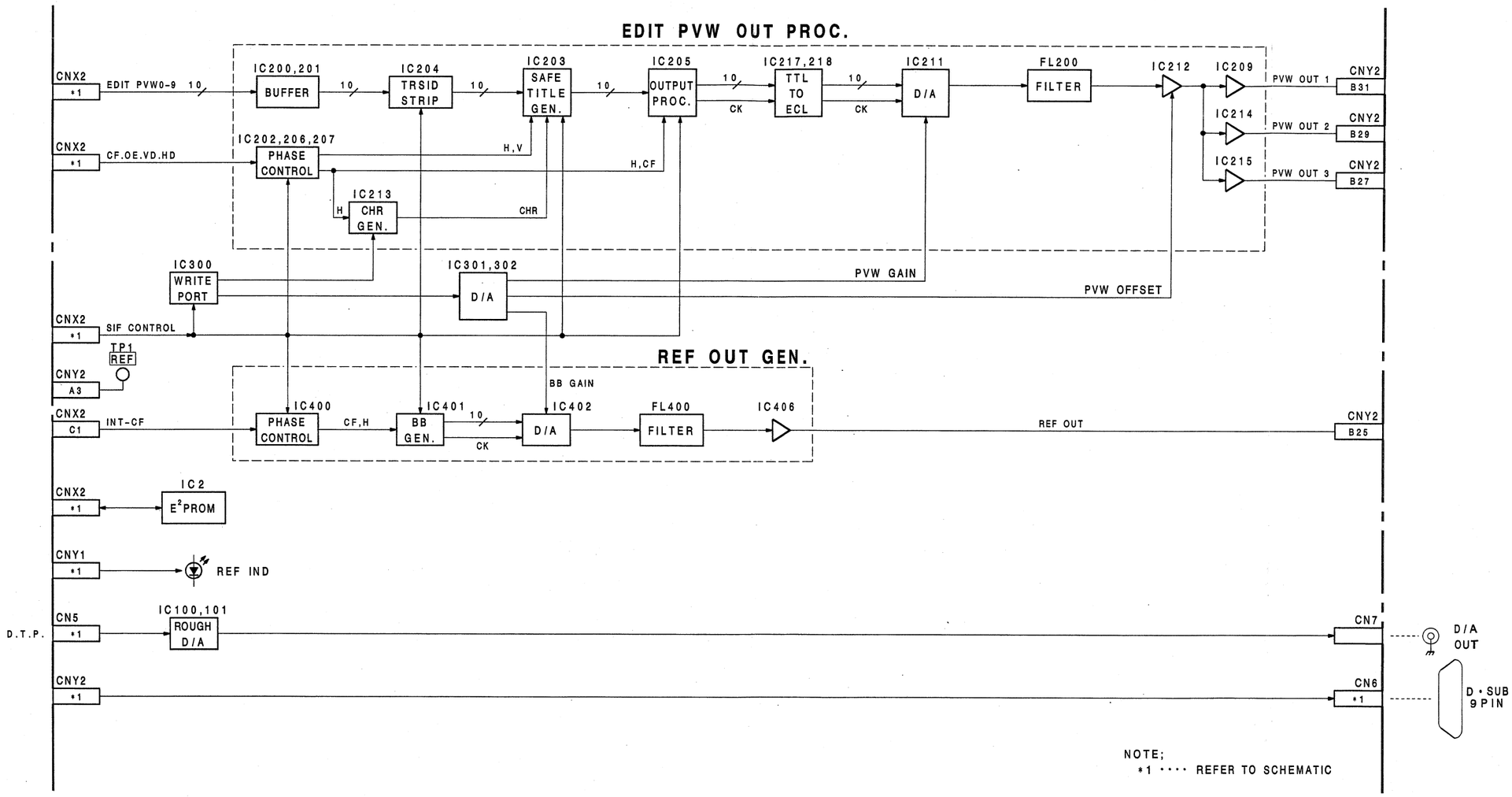

DA-71 BOARD
BKDS-6061

2-7

DA-72(BKDS-6062); ANALOG EDIT PVW/REF OUTPUT BOARD): DVS-6000C ONLY

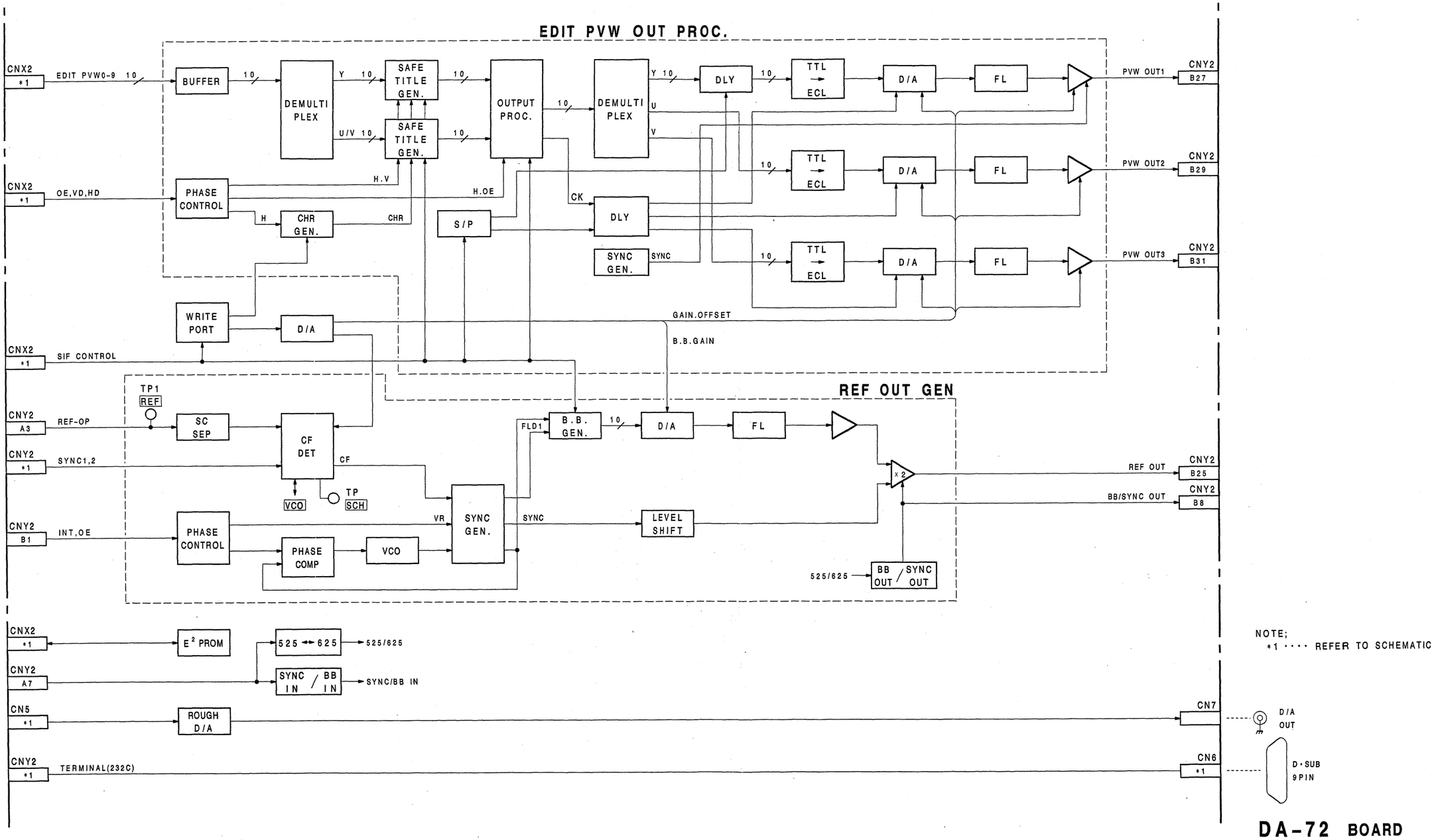

2-8

WKG-10 ; WIPE GENERATOR BOARD
WP-37(BKDS-6070) ; ENHANCED WIPE GENERATOR BOARD

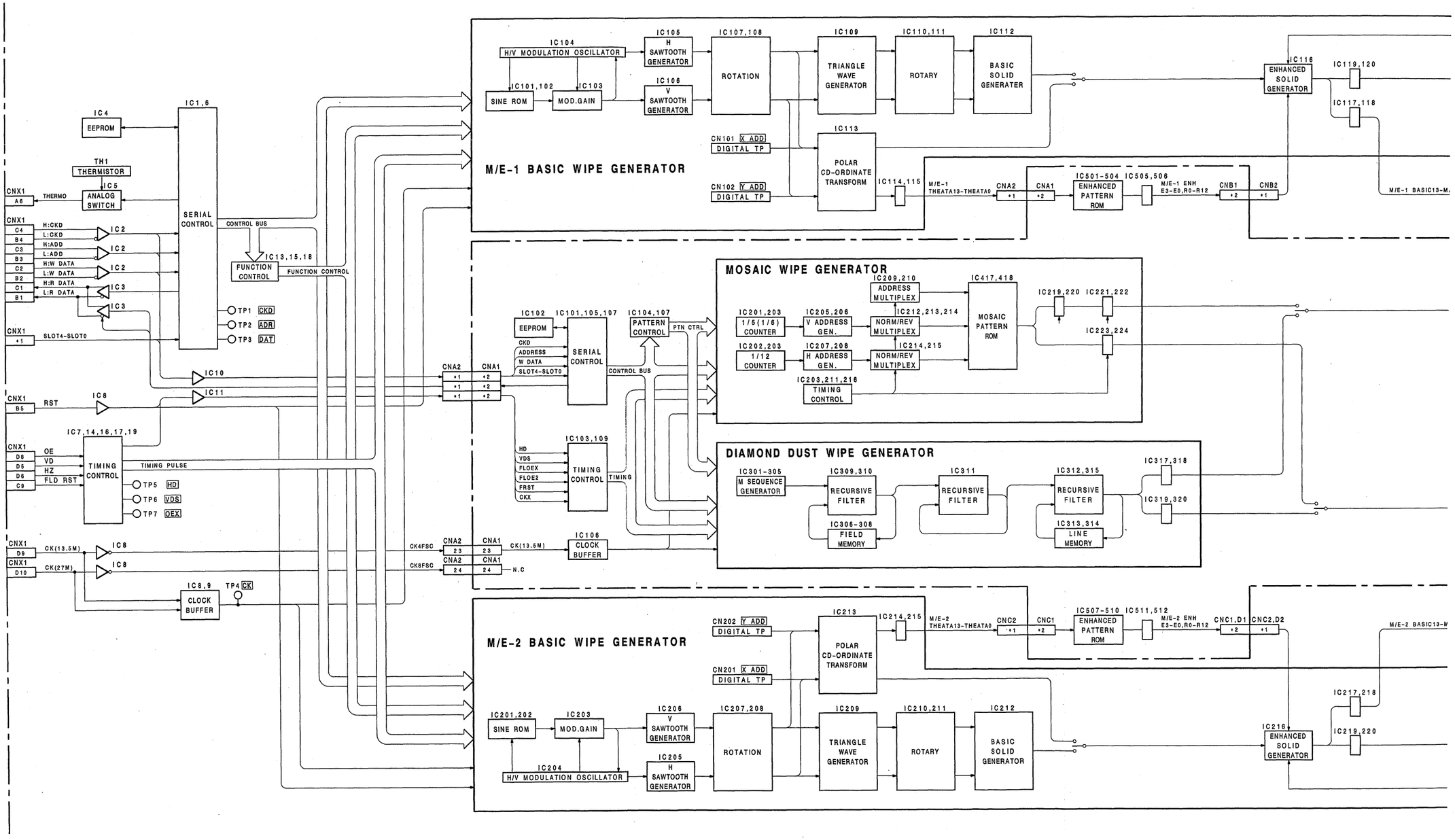

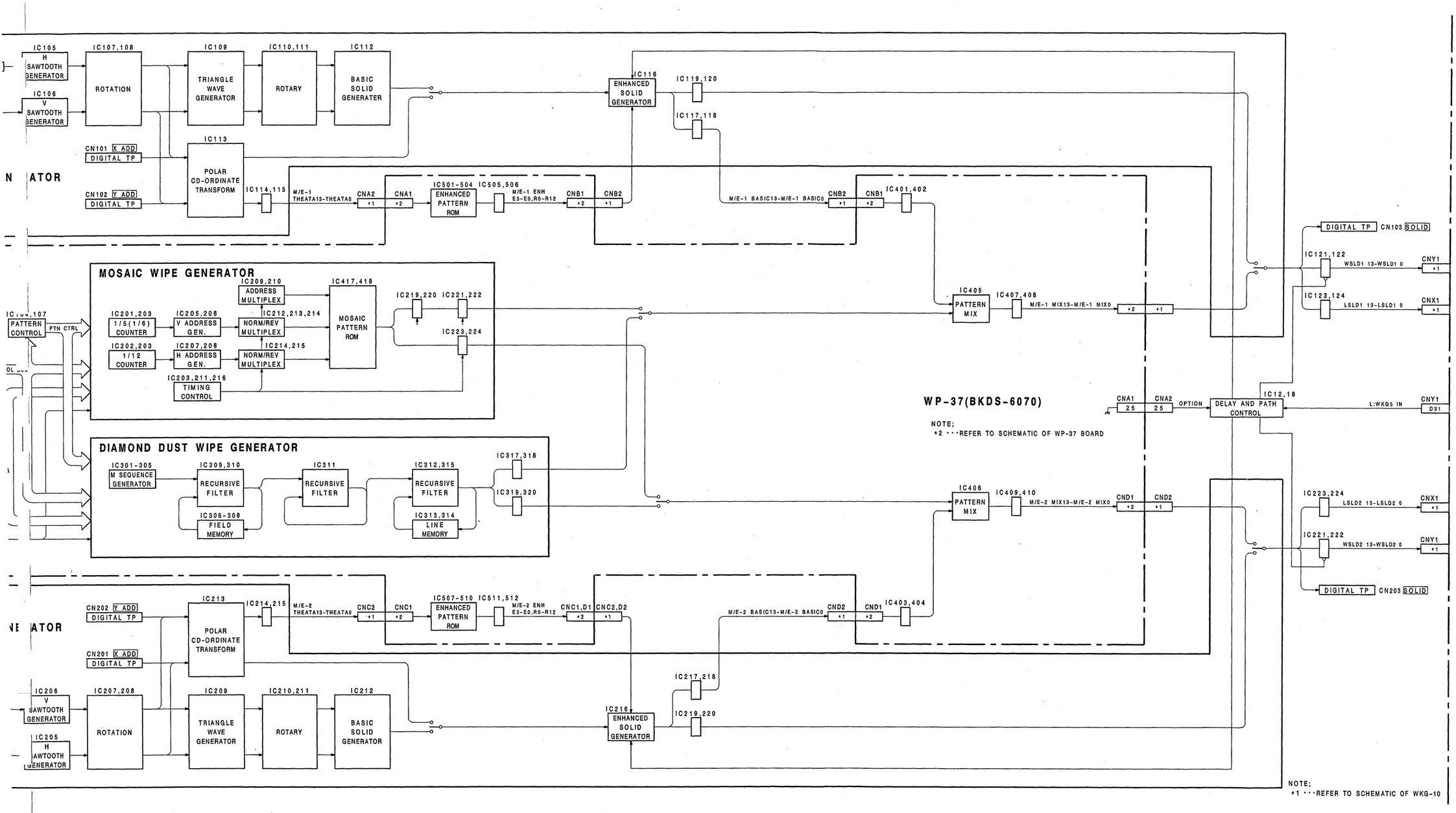

WKG-10 BOARD
DVS-6000/6000C

WP-37 BOARD
BKDS-6070

KPC-5 ; KEY PROCESSOR BOARD
BD-22(BKDS-6071) ; KEY BORDER GENERATOR BOARD

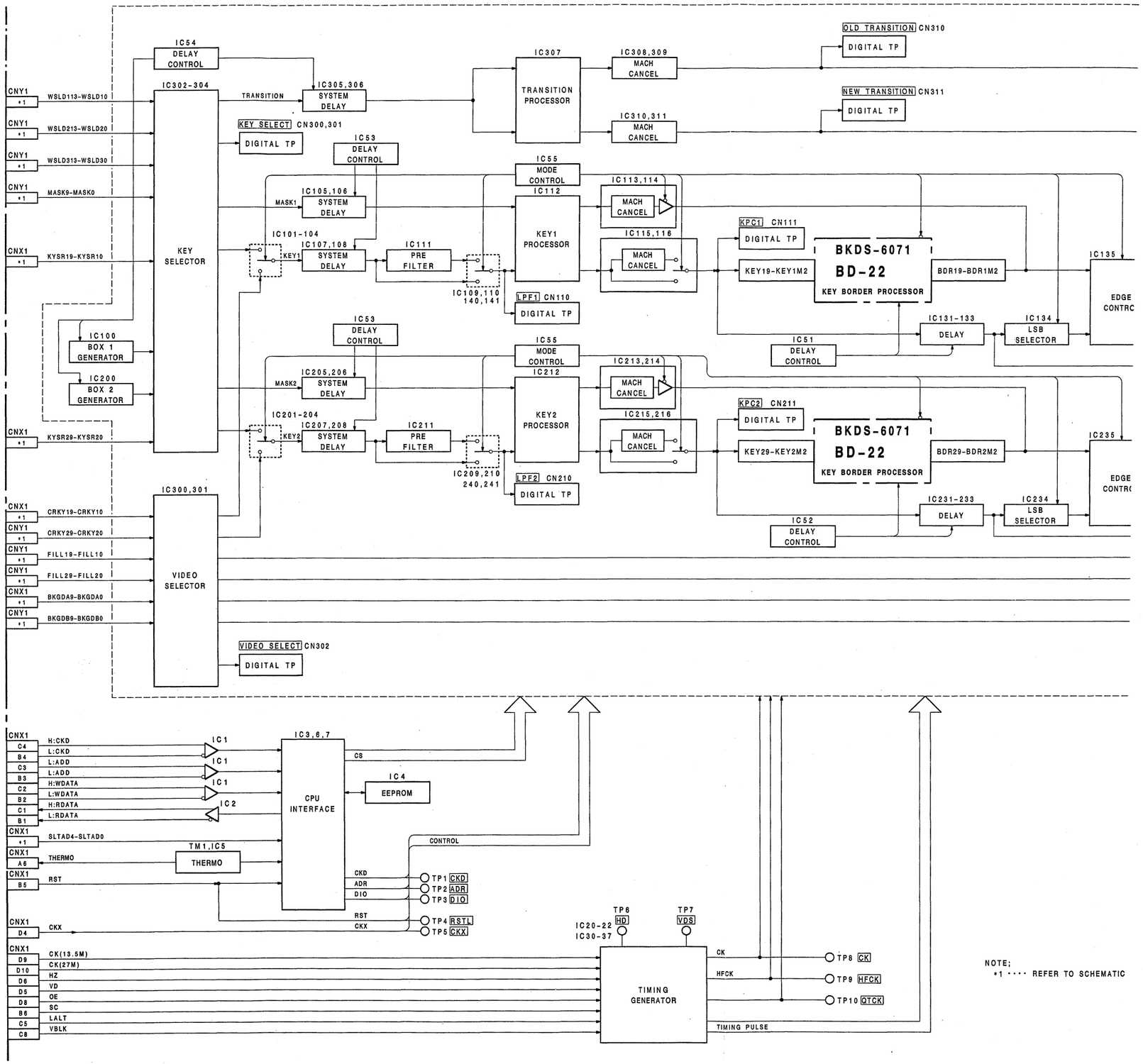

NOTE;
*1 ···· REFER TO SCHEMATIC

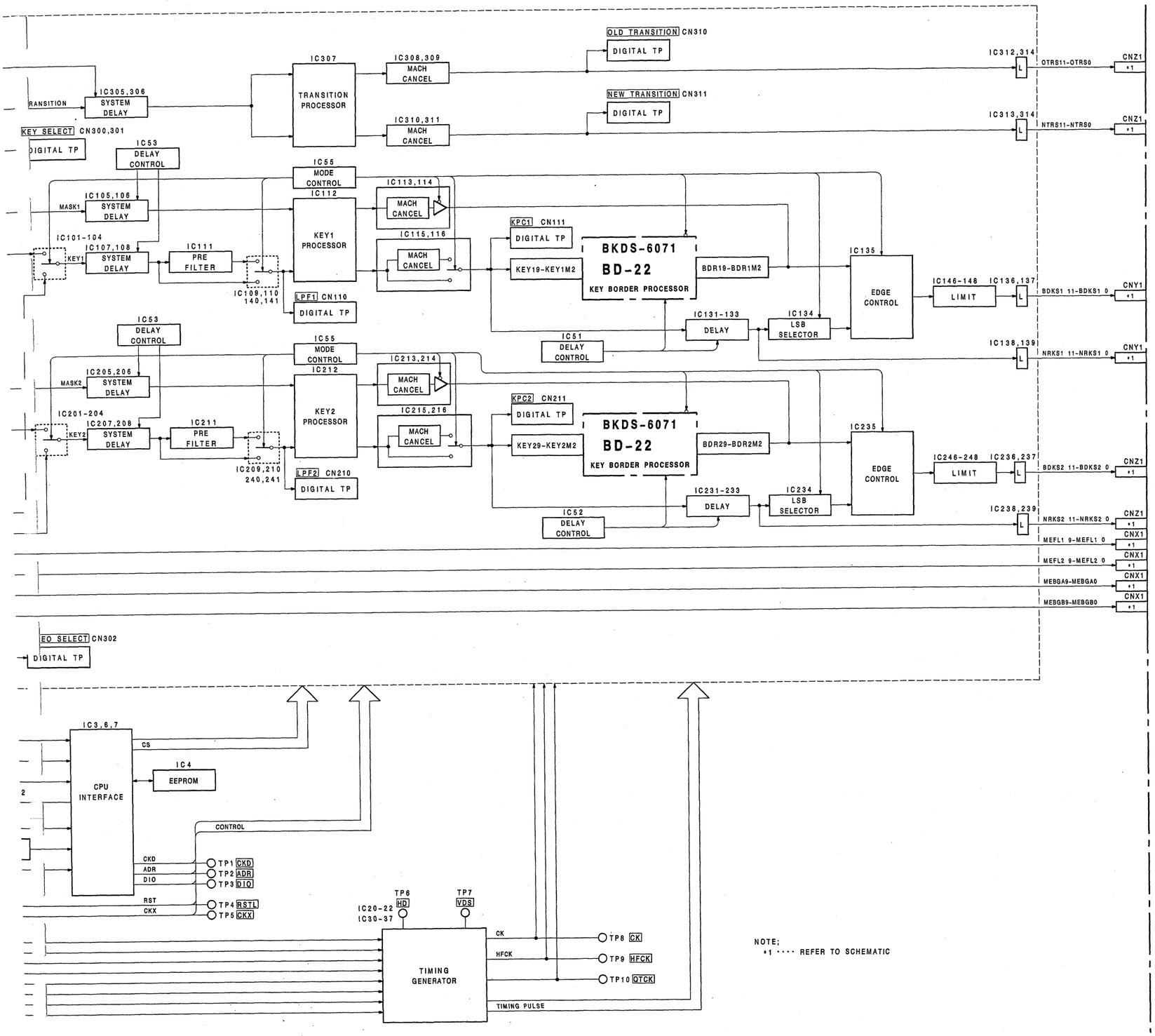

NOTE;
*1 ···· REFER TO SCHEMATIC

KPC-5 BOARD
DVS-6000/6000C

BD-22 BOARD
BKDS-6071
BKDS-6071

MIX-8/8A ; MIXER BOARD

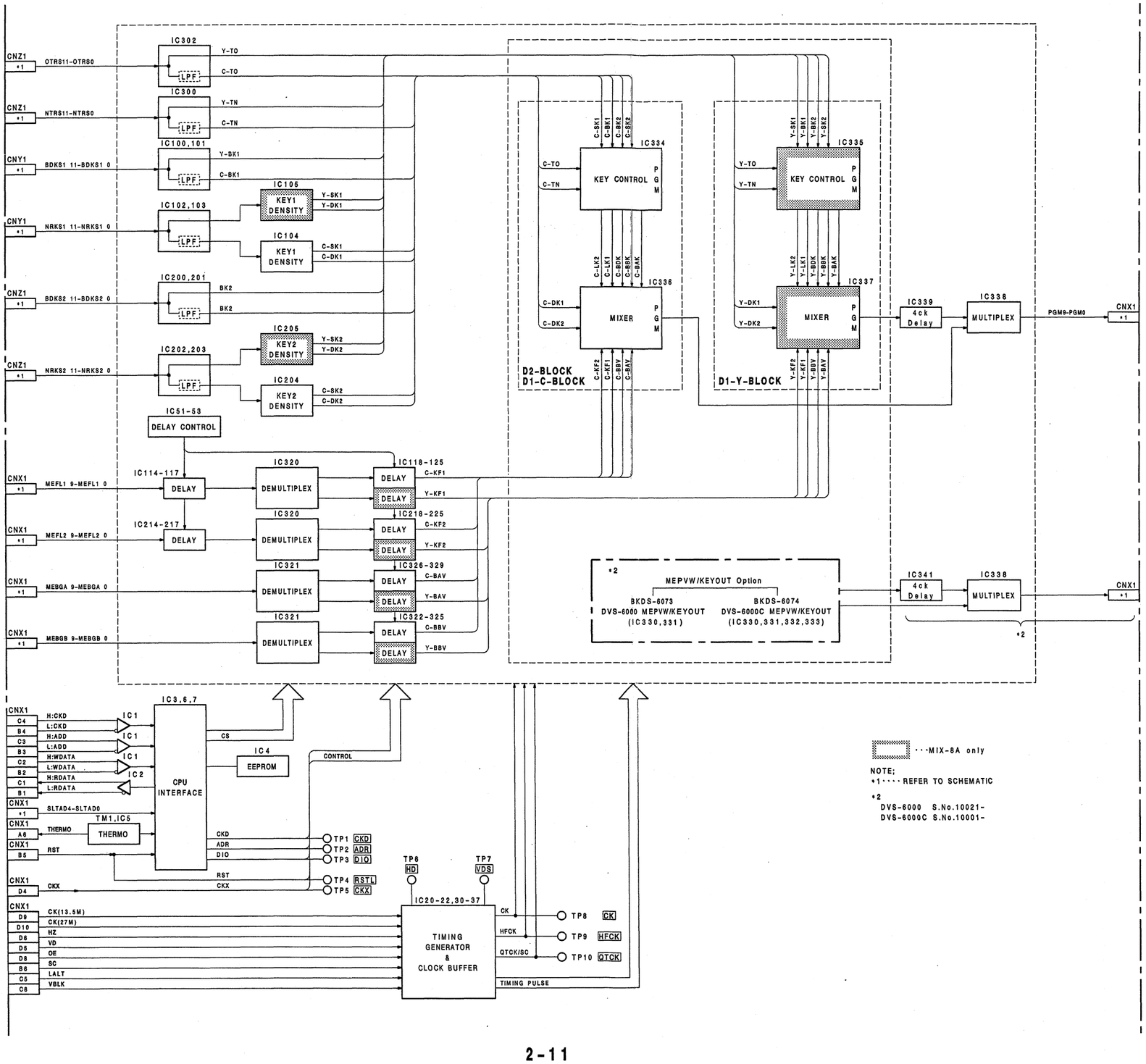

···MIX-8A only

NOTE;
*1···· REFER TO SCHEMATIC

*2
DVS-6000 S.No.10021-
DVS-6000C S.No.10001-

MIX-8/8A BOARD
DVS-6000/6000C

2-11

DSK-9/9A ; DSK BOARD

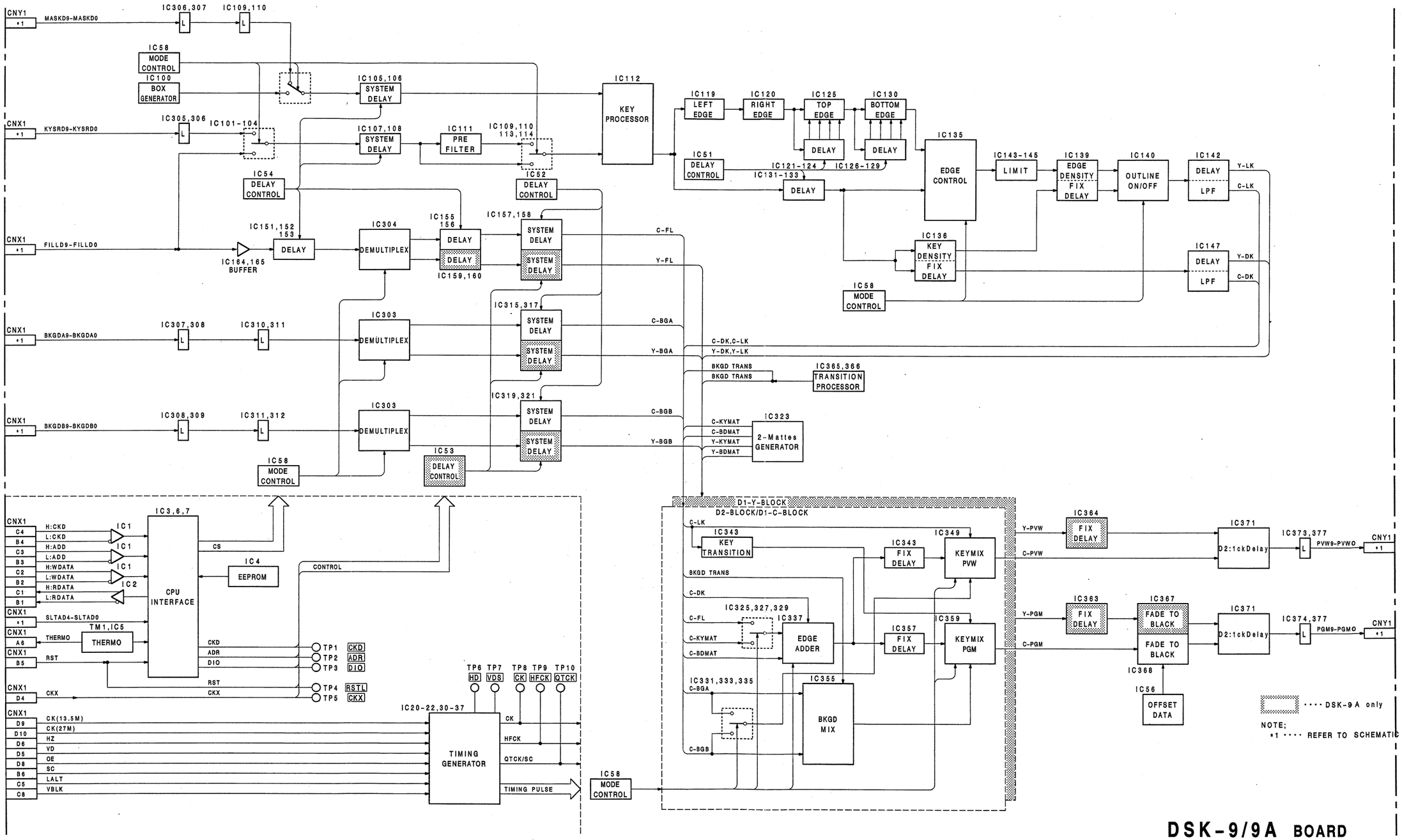

DSK-9/9A BOARD
DVS-6000/6000C

2-12

OUT-3 ; OUTPUT PROCESSOR BOARD

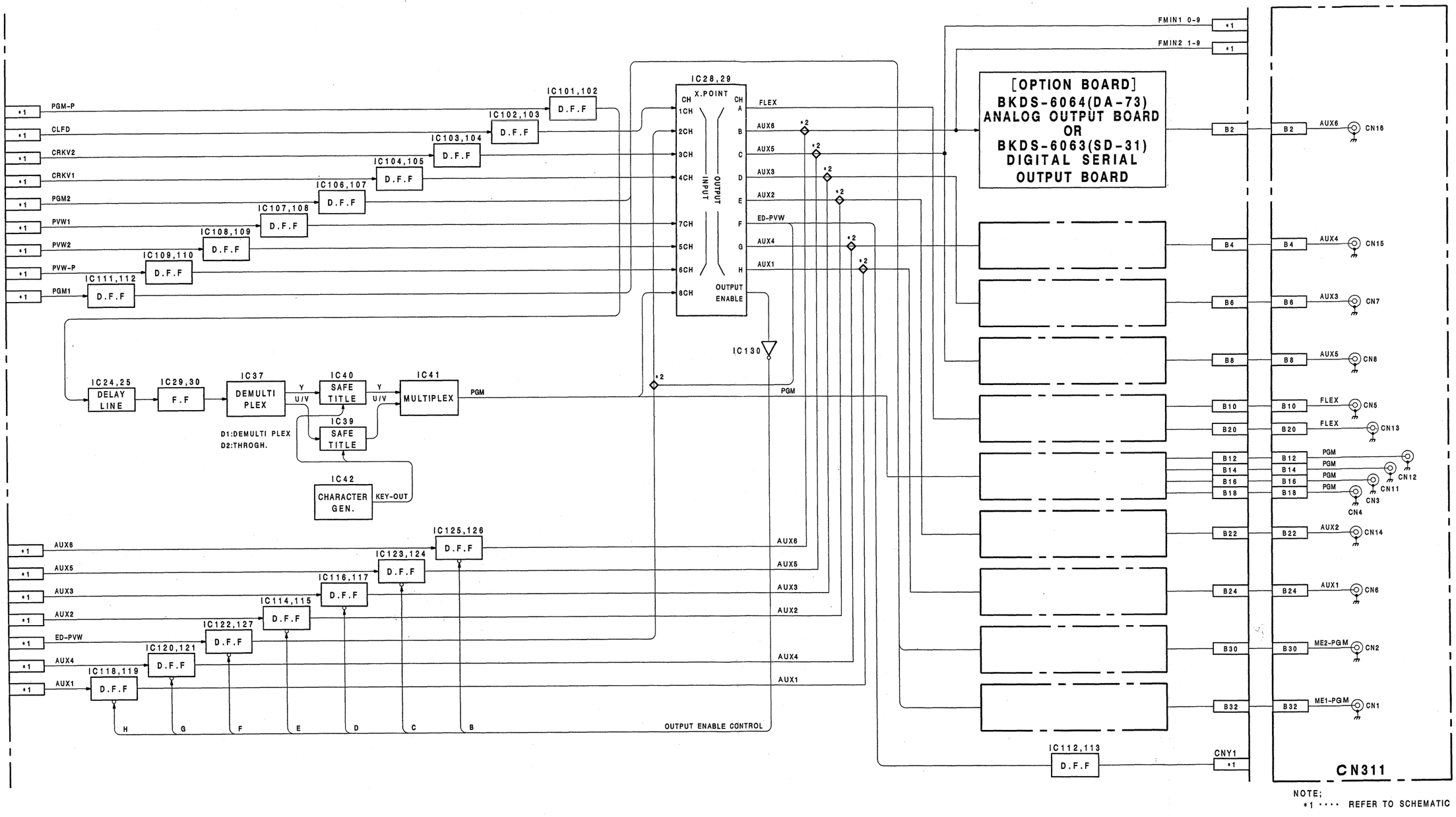

NOTE;
*1 ···· REFER TO SCHEMATIC

OUT-3 BOARD
DVS-6000/6000C

2-13

SD-31(BKDS-6063) ; DIGITAL EDIT PVW/REF OUTPUT BOARD

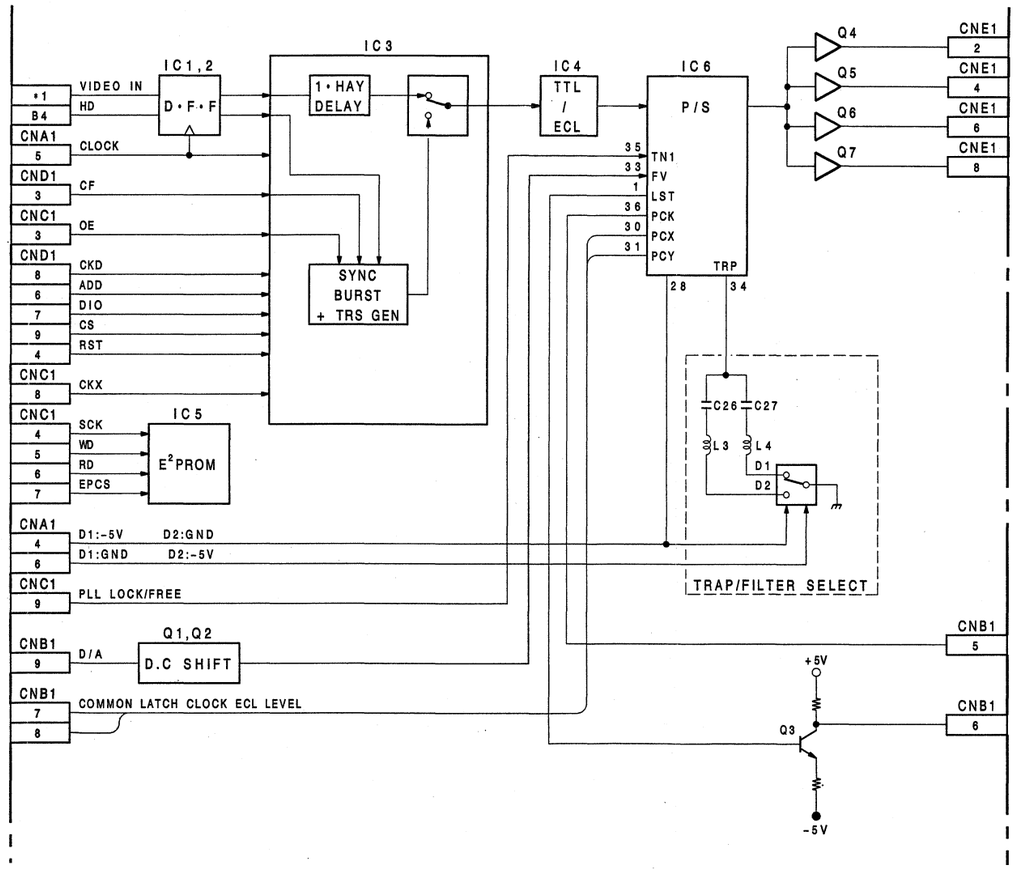

NOTE;
*1 ···· REFER TO SCHEMATIC

SD-31 BOARD
BKDS-6063

DA-73(BKDS-6064) ; ANALOG OUTPUT BOARD : DVS-6000 ONLY

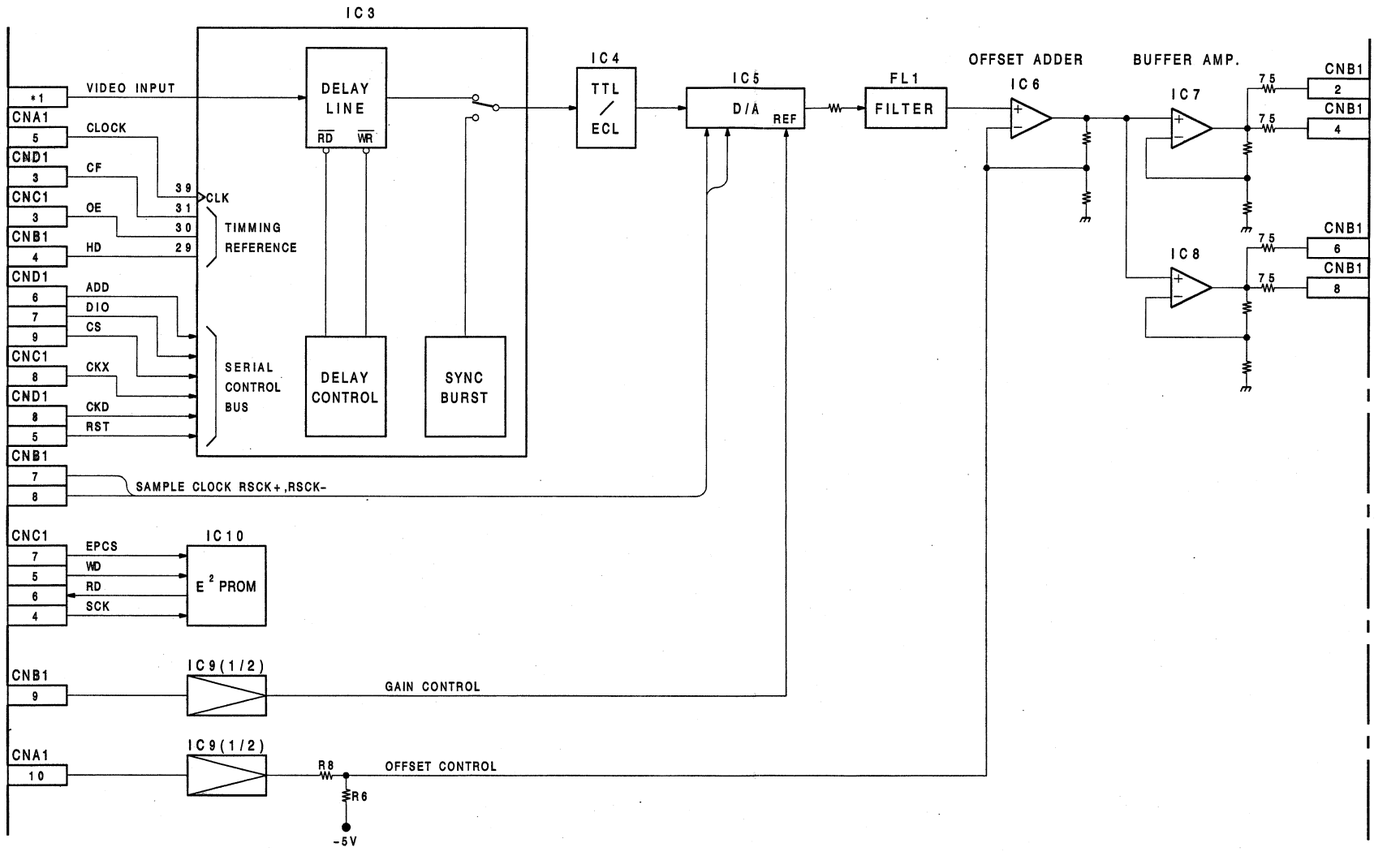

NOTE;
*1 ·· = REFER TO SCHEMATIC

DA-73 BOARD
BKDS-6064

2-15

MAT-4 ; MATTE GENERATOR BOARD

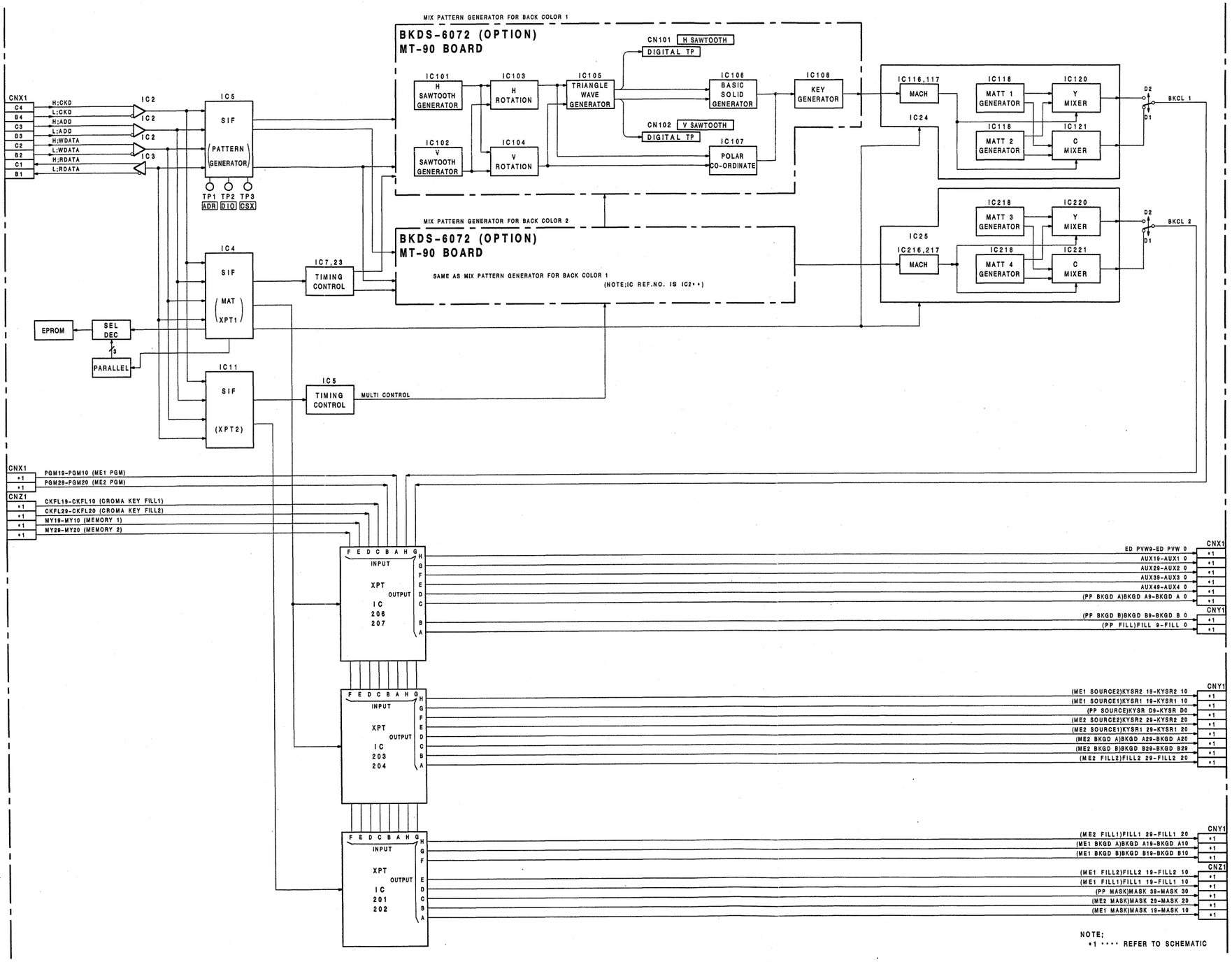

MAT-4 BOARD
DVS-6000/6000C

2-16

XPT-3(BKDS-8022) ; DIGITAL INPUT BOARD

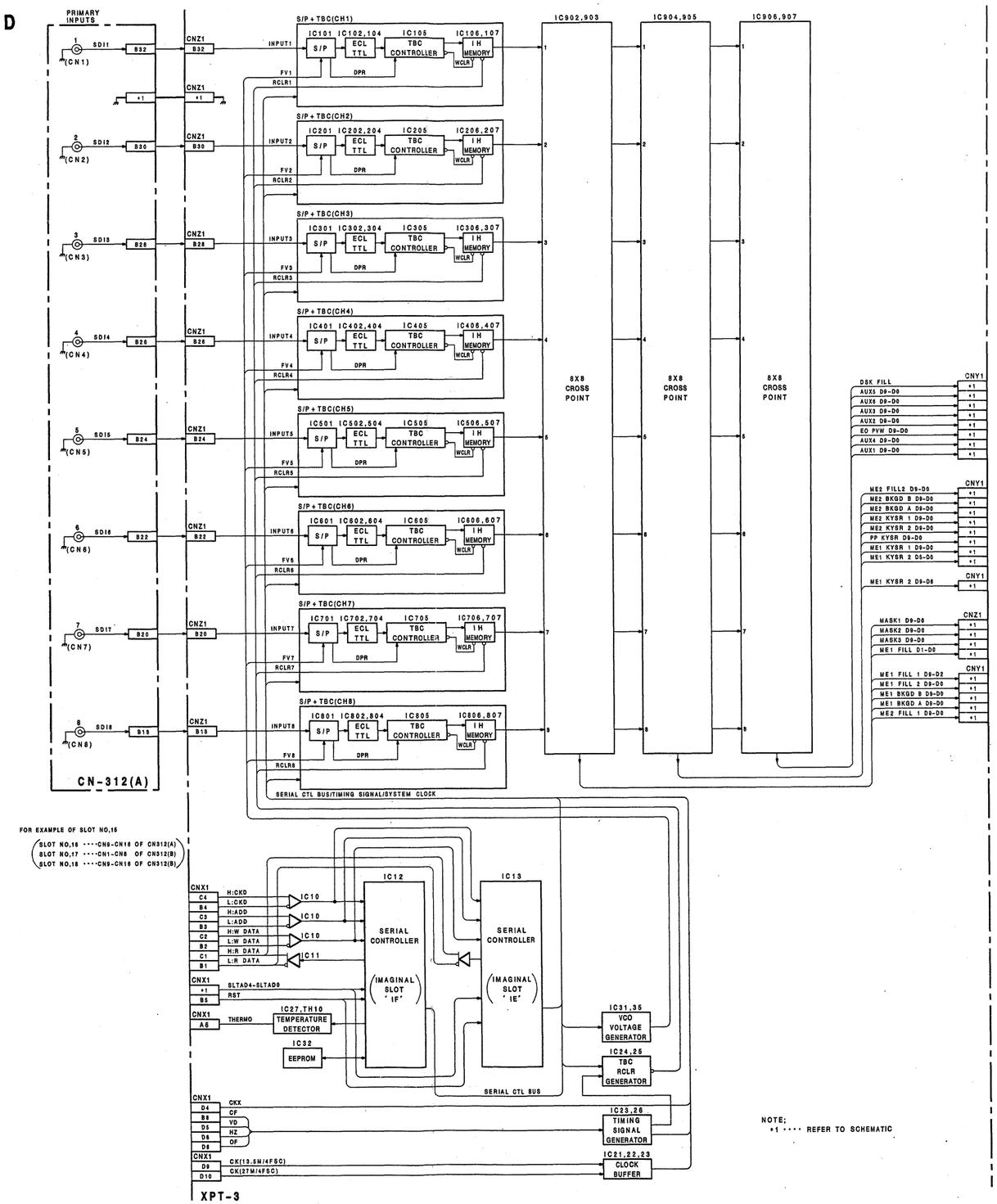

XPT-3 BOARD
BKDS-8022

2-17

RE-96 ; POWER SUPPLY AC-DC BOARD

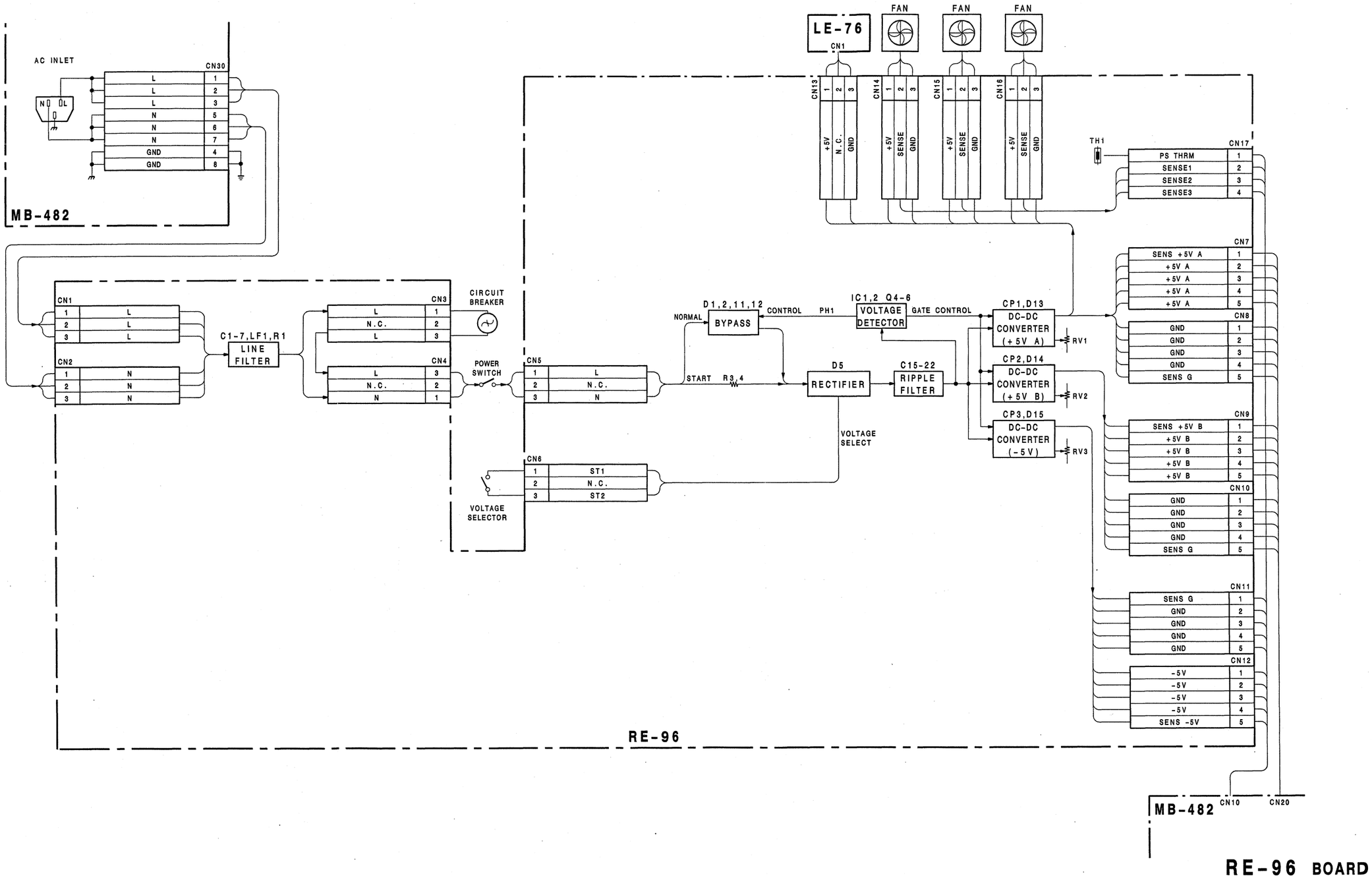

RE-96 BOARD
DVS-6000/6000C

SONY

DIGITAL VIDEO SWITCHER

DVS-6000/6000C

SWITCHER CONTROL PANEL

BKDS-6010

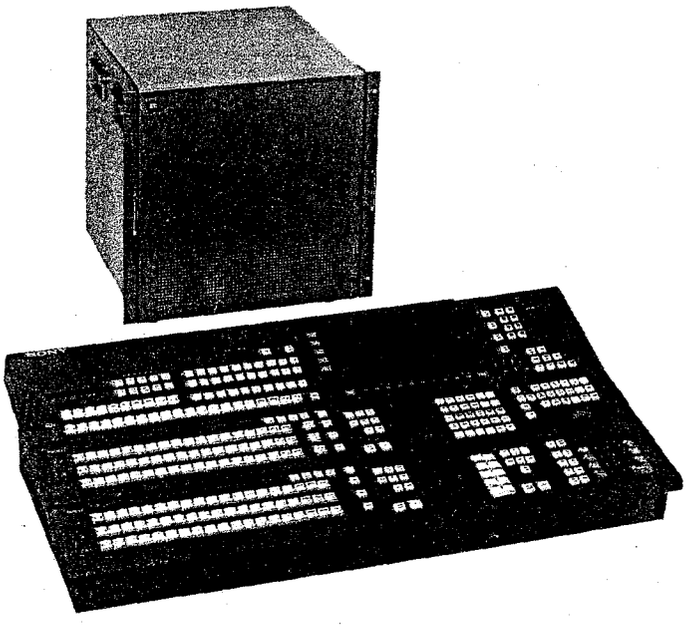

BKDS-6050 BKDS-6060 BKDS-6061 BKDS-6062
BKDS-6063 BKDS-6064 BKDS-6070 BKDS-6071
BKDS-6072 BKDS-6090 BKDS-8022

INSTALLATION AND MAINTENANCE MANUAL Part 2
1st Edition
Serial No. 10001 and Higher

For customers in the U.S.A.

WARNING

This equipment has been tested and found to comply with the limits for a Class A digital device, pursuant to Part 15 of the FCC Rules. These limits are designed to provide reasonable protection against harmful interference when the equipment is operated in a commercial environment. This equipment generates, uses, and can radiate radio frequency energy and, if not installed and used in accordance with the instruction manual, may cause harmful interference to radio communications. Operation of this equipment in a residential area is likely to cause harmful interference in which case the user will be required to correct the interference at his own expense.

You are cautioned that any changes or modifications not expressly approved in this manual could void your authority to operate this equipment.

The shielded interface cable recommended in this manual must be used with this equipment in order to comply with the limits for a digital device pursuant to Subpart B of Part 15 of FCC rules.

This symbol is intended to alert the user to the presence of important operating and maintenance (servicing) instructions in the literature accompanying the appliance.

WARNING
For the customers in the U.S.A.

Changing the voltage selector may require the use of a different line cord or attachment plug, or both. To reduce the risk of fire or electric shock, refer servicing to qualified service personnel.

For the customers in Canada
This apparatus complies with the Class A limits for radio noise emissions set out in radio interference regulations.

Pour les utilisateurs au Canada
Cet appareil est conforme aux normes Classe A, pour bruits radioélectriques. Tel que spécifiér dans le reglement sur le brouillage radioélectrique.

Bescheinigung des Herstellers
Hiermit wird bescheinigt, daß die Digital-Video-Schalteinheit DVS-6000C in Übereinstimmung mit den Bestimmungen der BMPT-Amtsblatt Vfg 243/1991 und Vfg 46/1992 funkenstört ist. Der vorschriftsmäßige Betrieb mancher Geräte (z.B.Meßsender) kann allerdings gewissen Einschränkungen unterliegen. Beachten Sie deshalb die Hinweise in der Bedienungsanleitung. Dem Bundesamt für Zulassungen in der Telekommunikation wurde das inverkehrbringen dieses Gerätes angezeigt und die Berechtigung zur Überprüfung der Serie auf Einhaltung der Bestmmungen eingeräumt.

Sony Deutschland GmbH
Hugo Eckener Str 20
D-5000 Köin 30

Hinweis
Gemäß der Amtsblätter des BMPT Nm. 61/1991 und 6/1992 wird der Betreiber darauf aufmerksam gemacht, daß die von ihm mit diesem Gerät zusammengestellte Anlage auch den technischen Bestimmungen dieser Amtsblätter genügen muß.

SECTION 3
SCHEMATIC DIAGRAMS

The circuit informations are provided below

Circuit Board	Circuit Function
ADC-5	ANALOG INPUT (BKDS-8030):DVS-6000 ONLY
ADC-9	ANALOG INPUT (BKDS-8021):DVS-6000 ONLY
BD-22	KEY BORDER GENERATOR (BKDS-6071)
CN-311	OUTPUT CONNECTOR
CN-312(A,B)	PRIMARY INPUT CONNECTOR
CN-503	CHROMA KEY INPUT CONNECTOR:DVS-6000 ONLY
CN-843	CONTROL CONNECTOR
CPU-147	CPU
CRK-4	CLEAN CHROMAKEY (BKDS-8031):DVS-6000C ONLY
CRK-5	D-2 CHROMAKEY (BKDS-8030):DVS-6000 ONLY
DA-71	ANALOG EDIT PVW/REF OUTPUT (BKDS-6061):DVS-6000 ONLY
DA-72	ANALOG EDIT PVW/REF OUTPUT (BKDS-6062):DVS-6000C ONLY
DA-73	ANALOG OUTPUT (BKDS-6064):DVS-6000 ONLY
DSK-9	DSK
KPC-5	KEY PROCESSOR
LE-76	POWER LED
LE-118	LED
MAT-4	MATTE GENERATOR
MB-482	MOTHER
MIX-8	MIXER
MT-90	BKGD COLOR MIX GENERATOR (BKDS-6072)
MY-50	D-2 FRAME MEMORY (BKDS-8040):DVS-6000 ONLY
MY-51	D-1 FRAME MEMORY (BKDS-8041):DVS-6000C ONLY
OUT-3	OUTPUT PROCESSOR
RE-96	POWER SUPPLY AC-DC
SD-30	DIGITAL EDIT PVW/REF OUTPUT (BKDS-6060)
SD-31	DIGITAL EDIT PVW/REF OUTPUT (BKDS-6063)
SG-210	D-2 SYNC GENERATOR:DVS-6000 ONLY
SG-211	D-1 SYNC GENERATOR:DVS-6000C ONLY
WKG-10	WIPE GENERATOR
WP-37	ENHANCED WIPE GENERATOR (BKDS-6070)
XPT-3	DIGITAL INPUT (BKDS-8022)

回路図において、REF. NOの近傍に下記記号が記載されていますが、これは生産時の部品データです。

In the schematic diagrams,the following marks are described nearby reference number. These are parts data at factory.

CAPACITOR (C)

- AL, AS } ELECTROLYTIC
- TA } TANTALUM
- CA, CC, CCS, CM, CS } CERAMIC
- MPS, PP, PT } MYLAR
- MD } DIPPED MICA
- MS } MICA

RESISTOR (R)
VARIABLE RESISTOR

- RC, RD } CARBON
- RF } FUSE
- RN, RS } METAL
- RW } WIERWOUND

Board configuration of DVS-6000/6000C

Slots	DVS-6000	DVS-6000C
1	CPU-147	CPU-147
2	SG-210 & LE-118 or SD-30(BKDS-6060) or DA-71(BKDS-6061)	SG-211 & LE-118 or SD-30(BKDS-6060) or DA-72(BKDS-6062)
3	NOT USED	NOT USED
4	WKG-10 & WP-37(BKDS-6070)	WKG-10 & WP-37(BKDS-6070)
5,7	KPC-5 & BD-22(BKDS-6071)	KPC-5 & BD-22(BKDS-6071)
6,8	MIX-8	MIX-8A
9	DSK-9	DSK-9A
10	OUT-3 & SD-31(BKDS-6063) or DA-73(BKDS-6064)	OUT-3 & SD-31(BKDS-6030)
11	CRK-5*(BKDS-8030)	CRK-4*(BKDS-8031)
12	ADC-5*(BKDS-8030)	CRK-4*(BKDS-8031)
13	MAT-4 & MT-90(BKDS-6072)	MAT-4 & MT-90(BKDS-6072)
14	MY-50*(BKDS-8040)	MY-51*(BKDS-8041)
15~18	ADC-9*(BKDS-8021) or XPT-3(BKDS-8022)	XPT-3*(BKDS-8022)

*:DVS-8000/8000Cと共通で使用しているオプション基板です。
( )内は機種名を意味します。これらオプション基板の詳細については、それぞれのオペレーション&メンテナンスマニュアルを御覧ください。

*:Optional board commonly used for DVS-8000/8000C.
The parenthesis signifies the model name.As for details of the optional board, refer to operation and maintenance manuals.

CPU-147(1/5);CPU BOARD

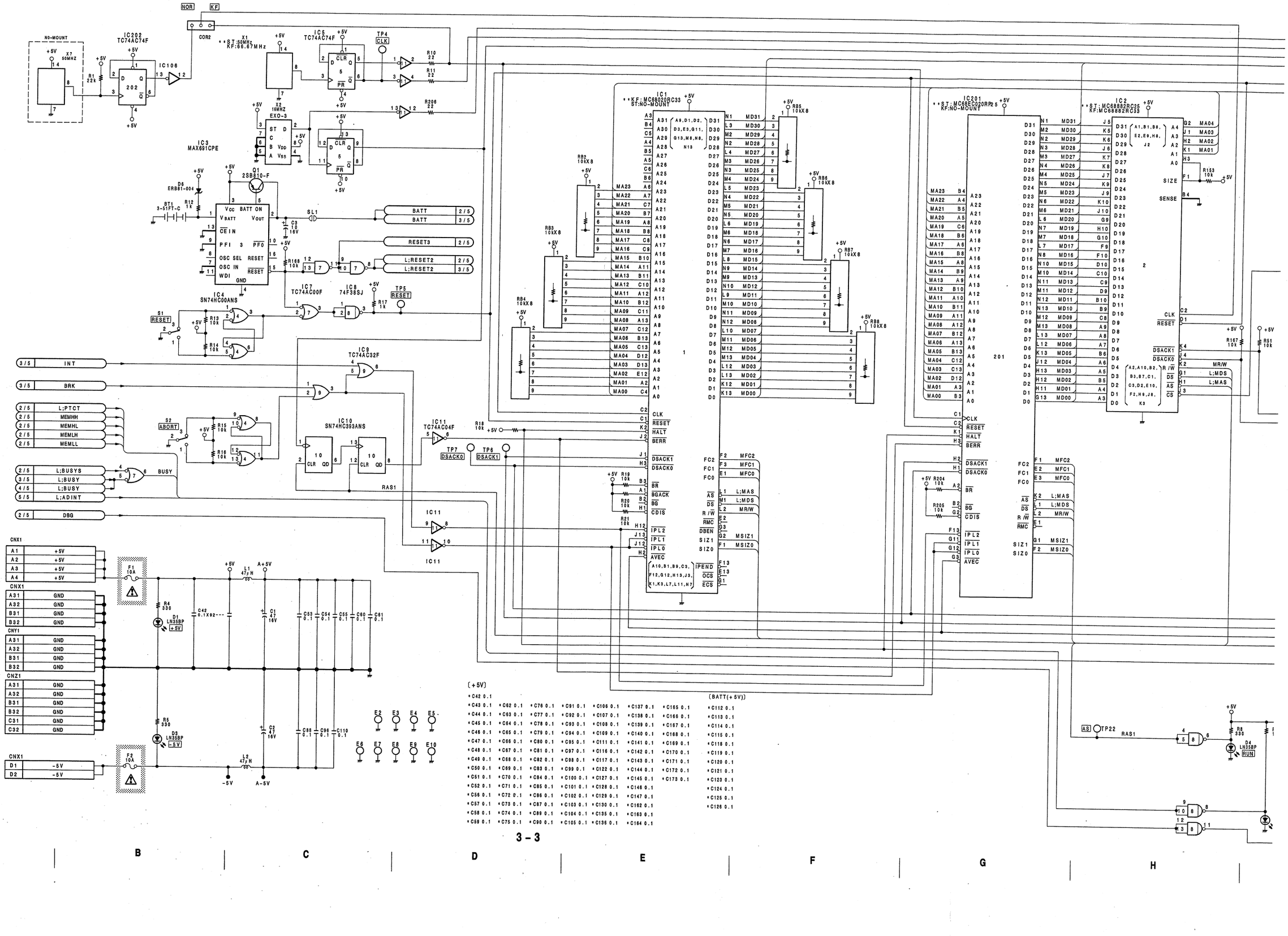

3-3

A B C D E F G H

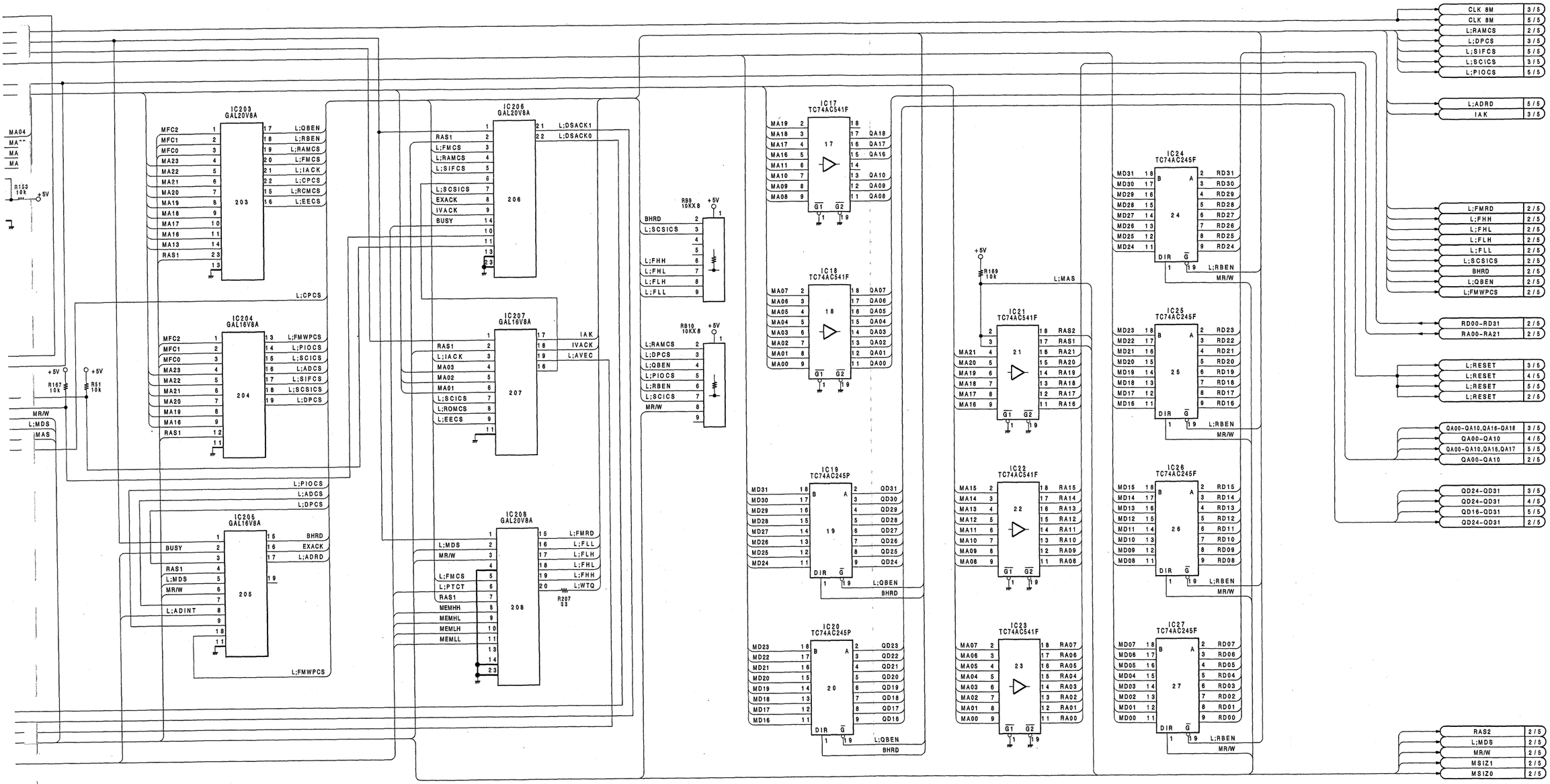

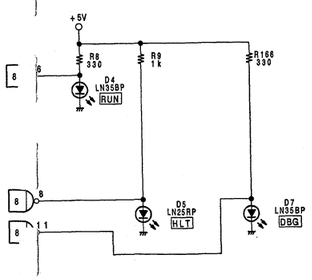

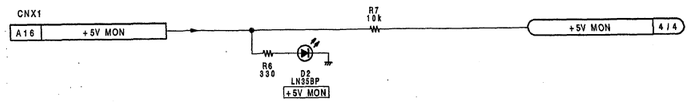

**: ST:STANDARD
KF:KEY FRAME OPTION

CPU-147 BOARD (1/5)

BOARD NO.1-646-022-11
DVS-6000/6000C

CPU-147(2/5);CPU BOARD

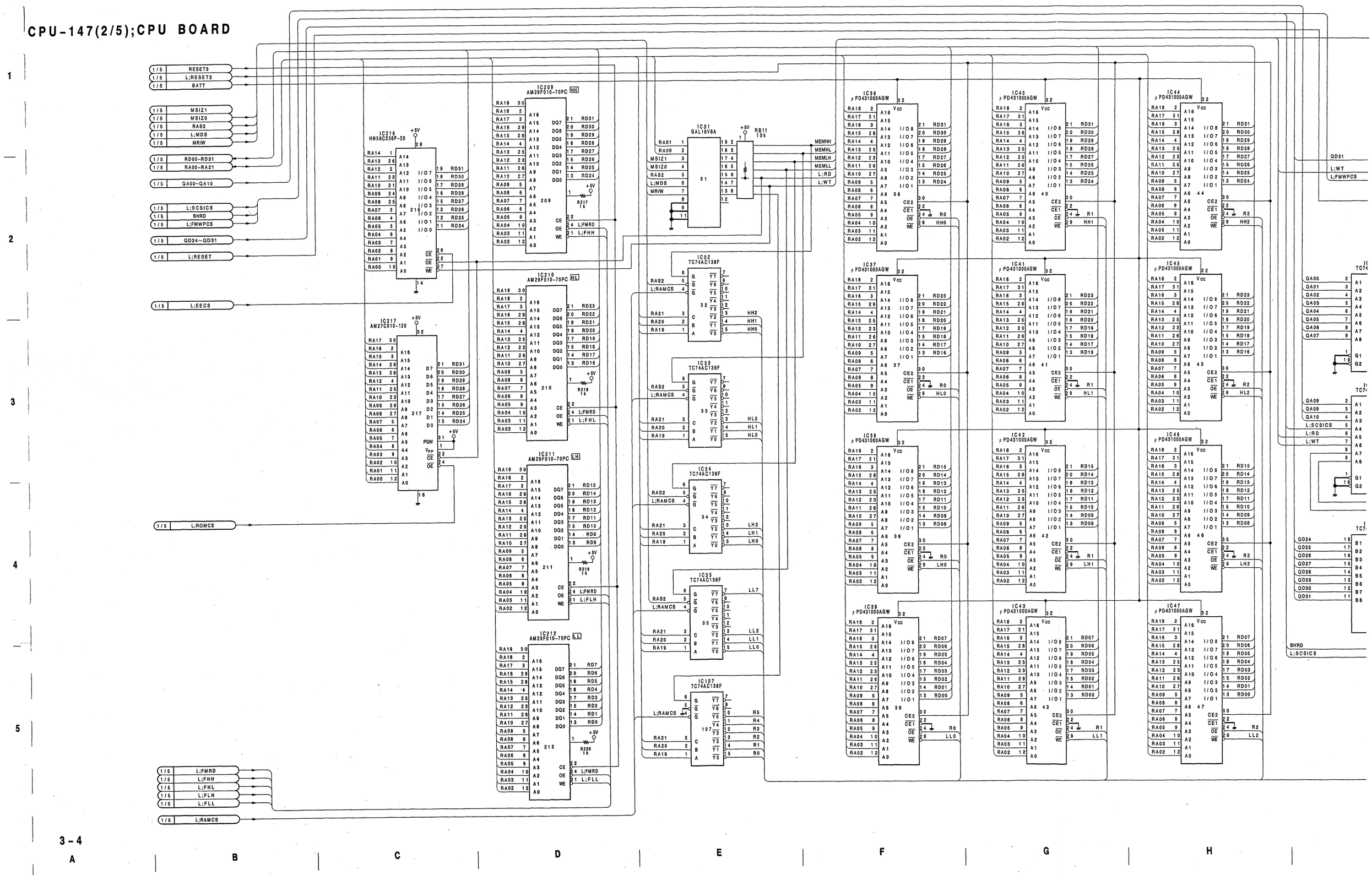

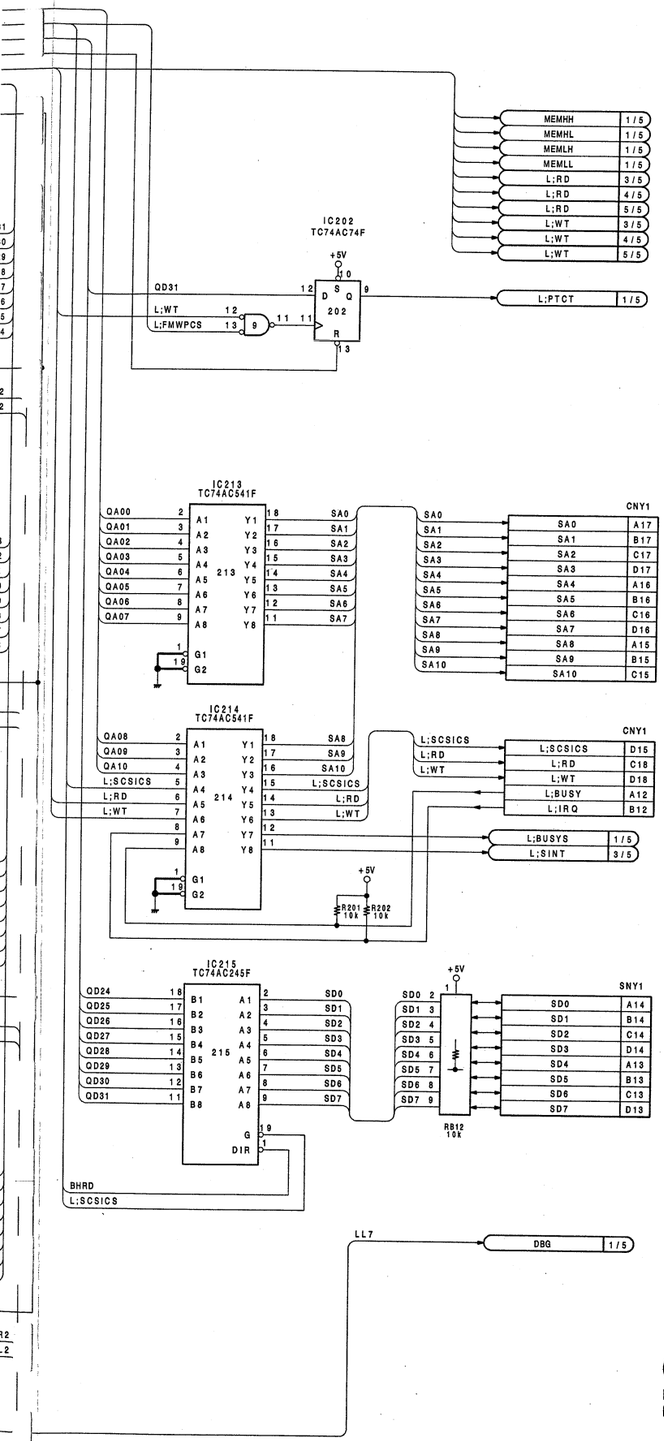

CPU-147 BOARD (2 / 5)

BOARD NO.1-646-022-11
DVS-6000/6000C

CPU-147(3/5);CPU BOARD

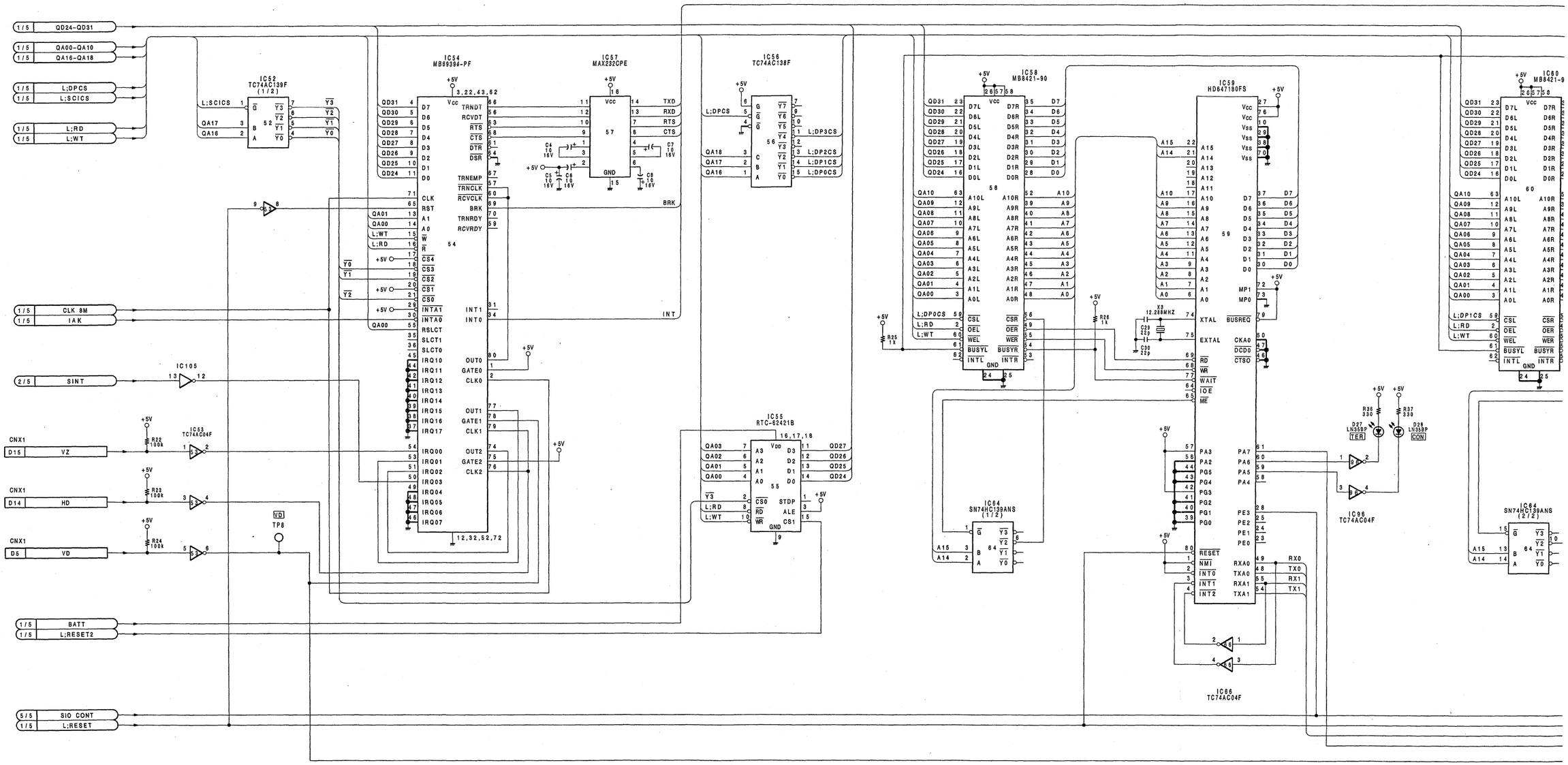

A | B | C | D | E | F | G | H

CPU-147(3/5)

IC56 TC74AC138F

IC55 RTC-62421B

IC58 MB8421-80

IC59 HD647180FS

IC60 MB8421-90

IC61 HD647180FS

IC64 SN74HC139ANS (1/2)

IC64 SN74HC139ANS (2/2)

IC66 TC74AC04F

IC86 TC74AC04F

IC67 MAX232CPE

IC68 MC34051P

IC69 MC34051P

FACTORY USE CONNECTOR CN2

RXD	1
TXD	2
CTS	3
RTS	4
GND	5

BRK	1/5
INT	1/5
L;DP2CS	4/5
L;DP3CS	4/5
L;BUSY	1/5

VD B	B13
VD A	B14

TXD	A30
RXD	B30
RTS	C30
CTS	D30

TXD	A11
RXD	C11
RTS	A12
CTS	C12

CON RXB	C13
CON RXA	C14

CON TXB	A13
CON TXA	A14

EDTA RXB	C17
EDTA RXA	C18

EDTA TXB	A17
EDTA TXA	A18

EDTB RXB	C19
EDTB RXA	C20

EDTB TXB	A19
EDTB TXA	A20

SIO1 STS	5/5
SIO0 STS	5/5

CPU-147 BOARD (3/5)

BOARD NO.1-646-022-11
DVS-6000/6000C

CPU-147(4/5);CPU BOARD

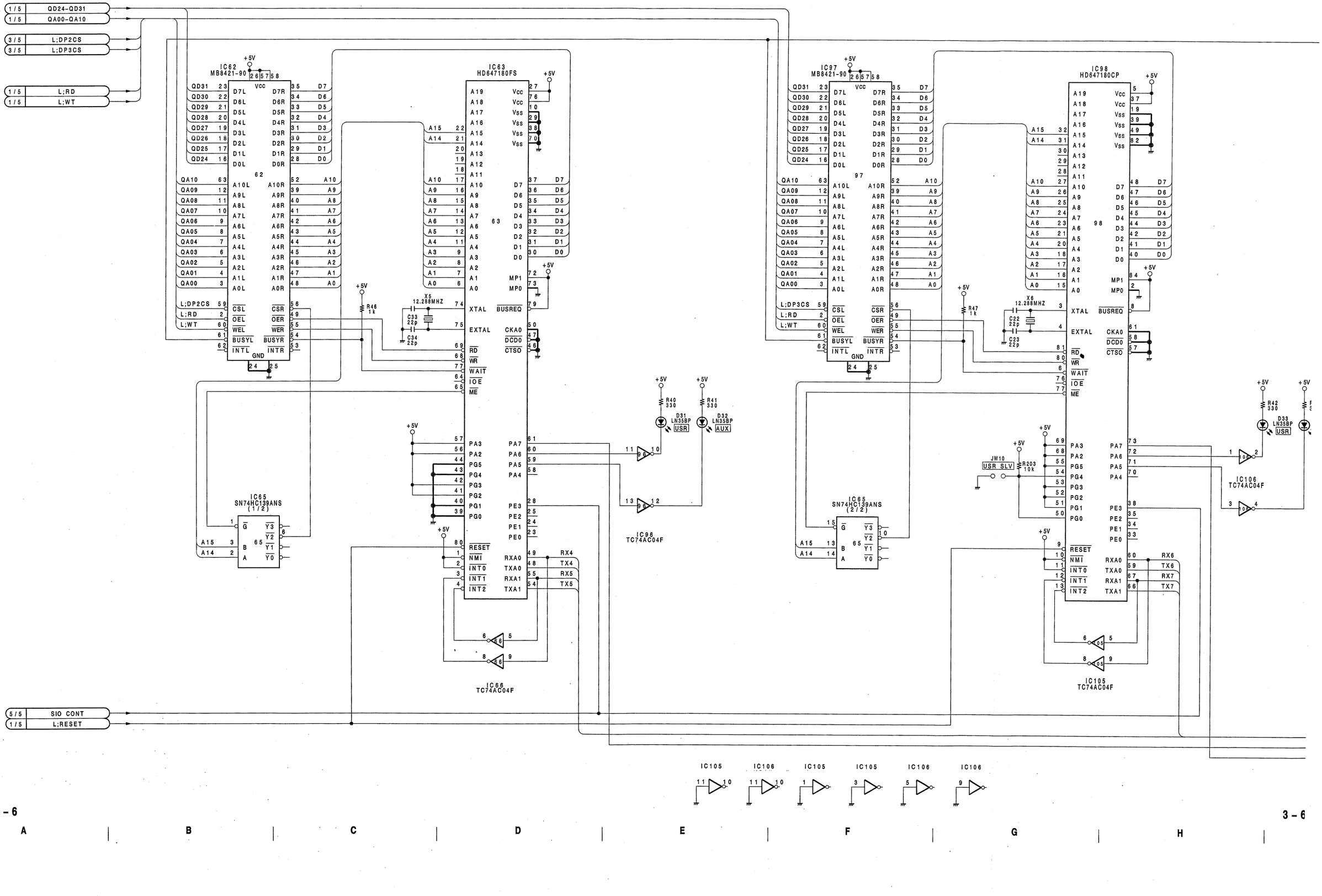

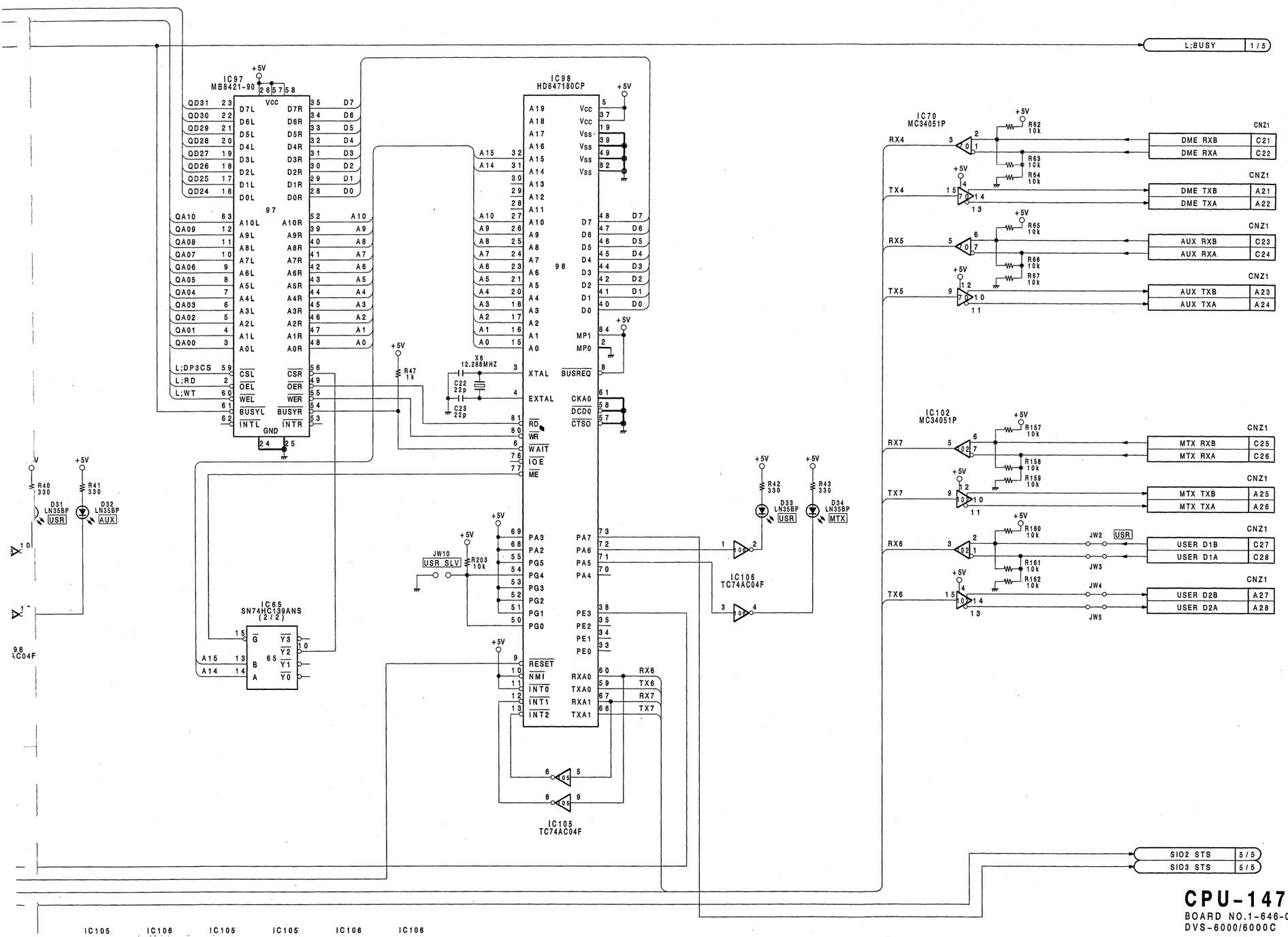

CPU-147 BOARD (4/5)

BOARD NO.1-646-022-11
DVS-6000/6000C

CPU-147(5/5);CPU BOARD

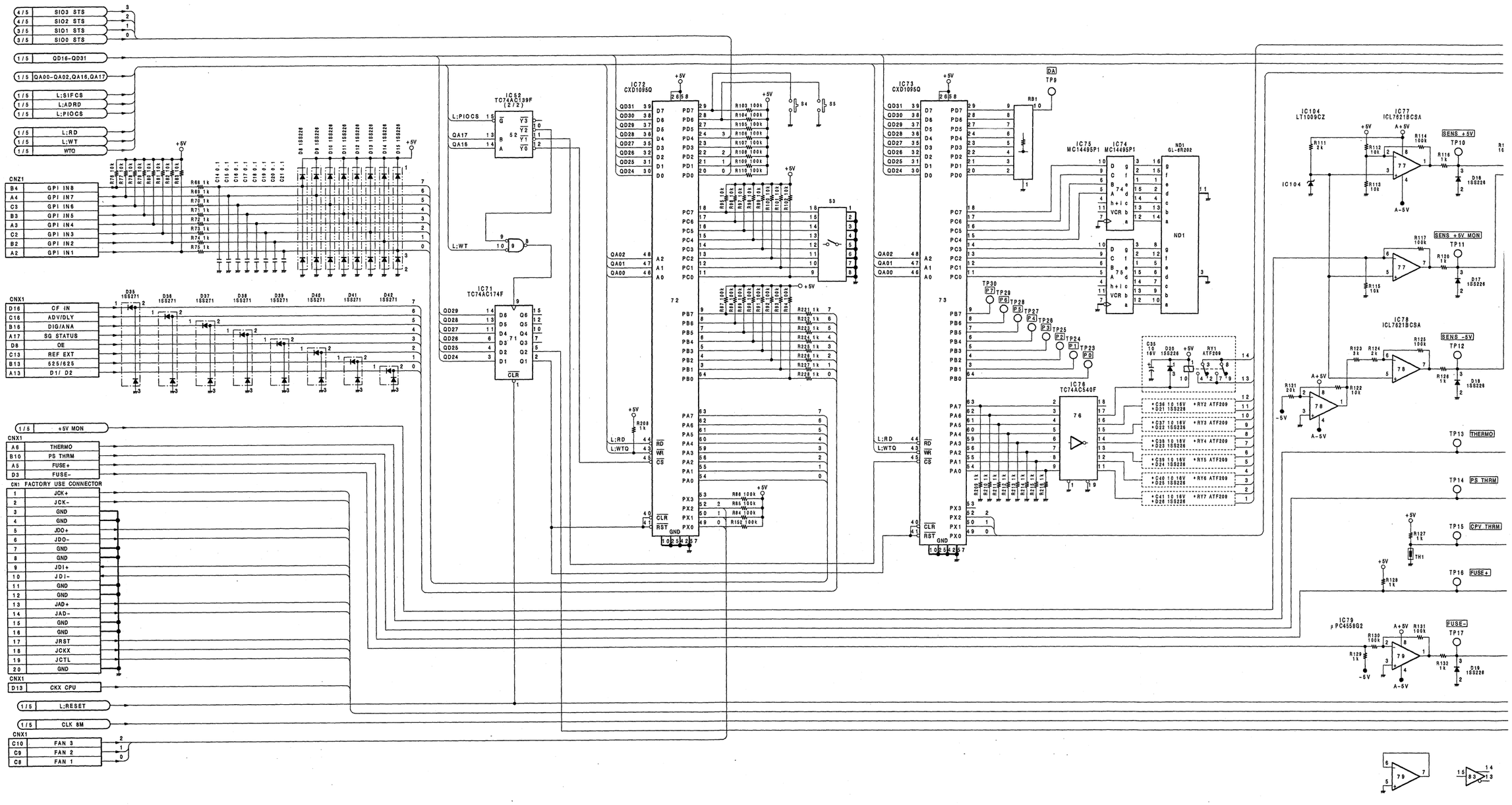

A | B | C | D | E | F | G | H

CPU-147(5/5)

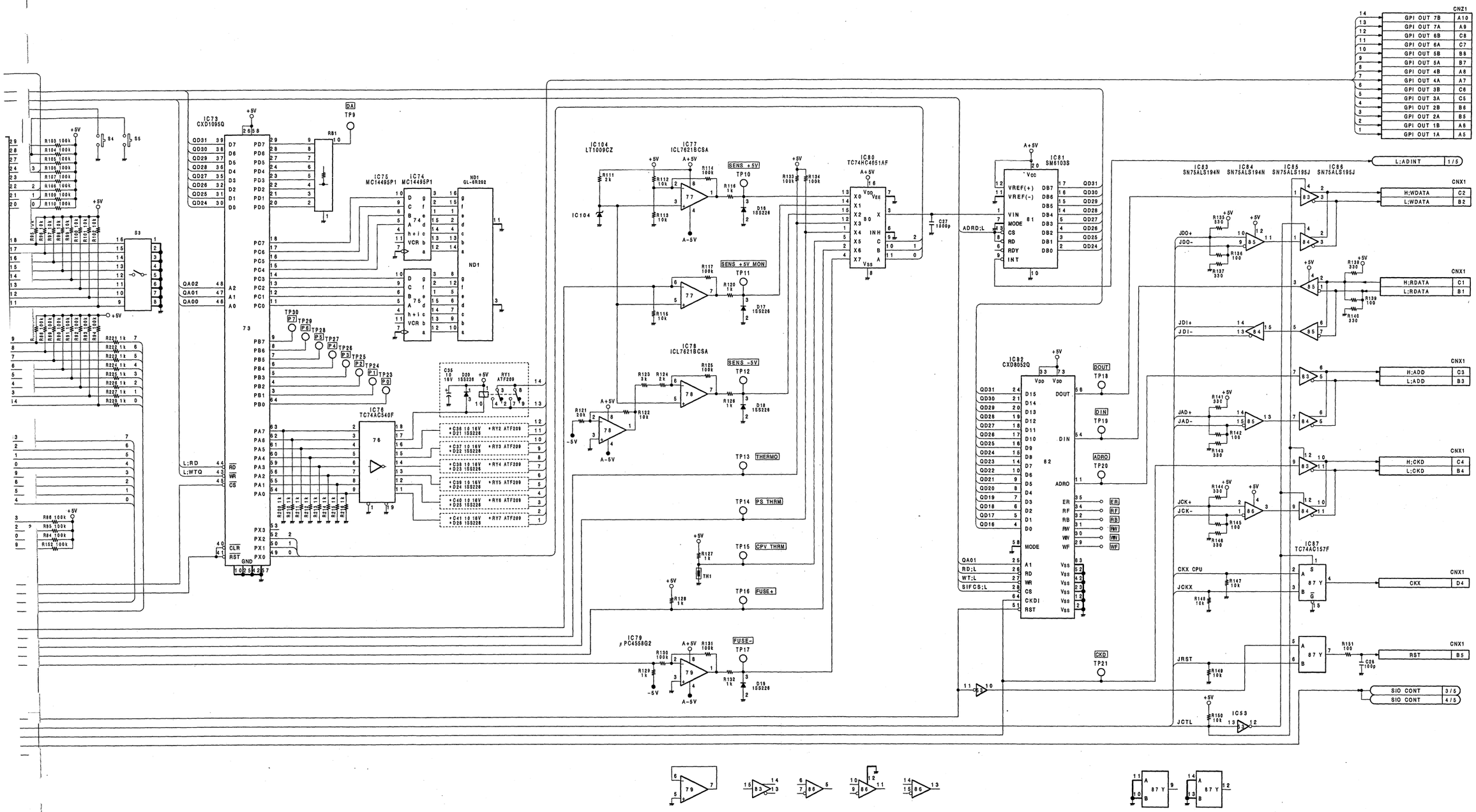

CPU-147 BOARD (5/5)

BOARD NO.1-646-022-11
DVS6000/6000C

SG-210(1/3);D-2 SYNC GENERATOR BOARD

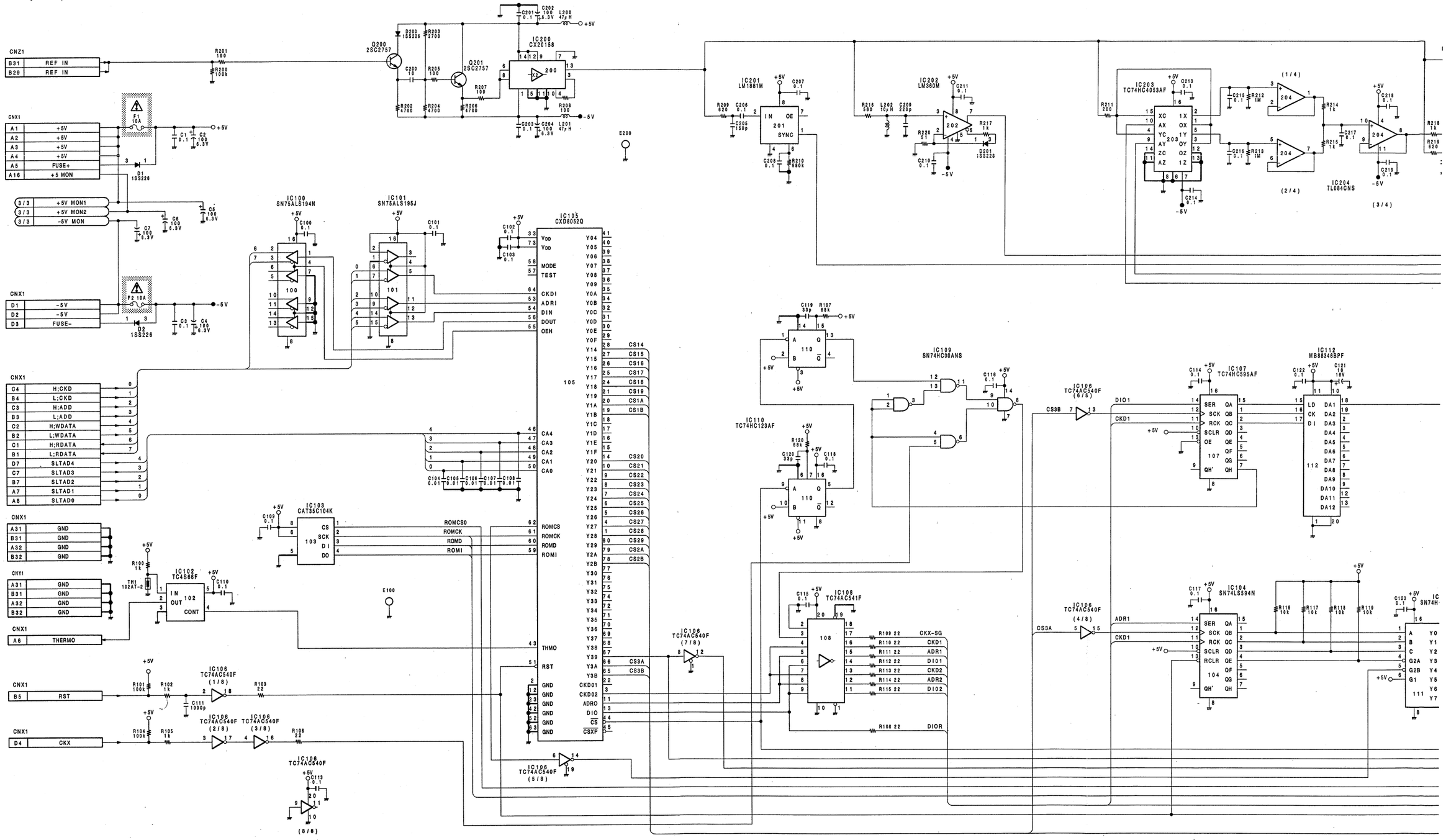

A | B | C | D | E | F | G | H

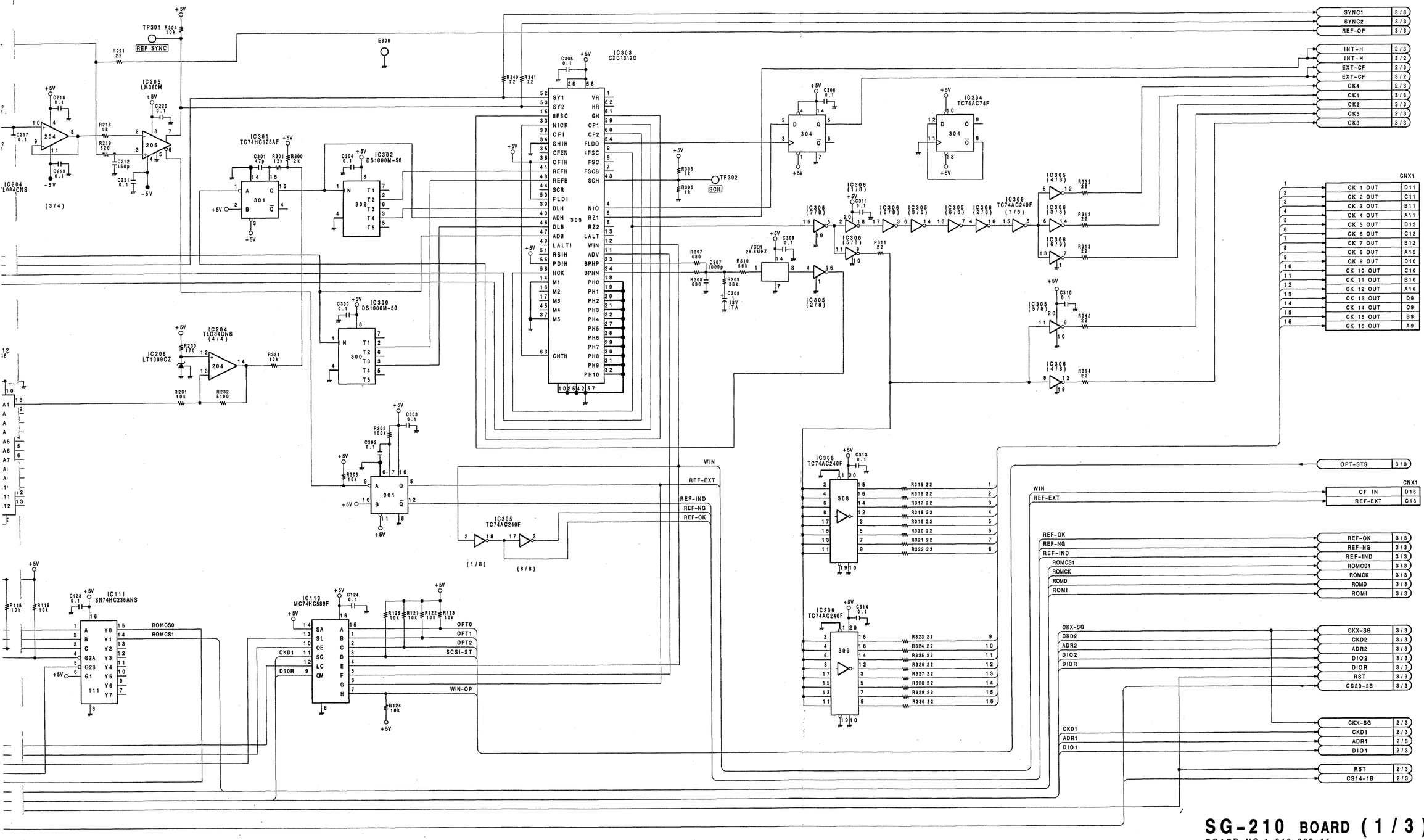

SG-210 BOARD (1/3)

BOARD NO.1-646-023-11
DVS-6000

SG-210(2/3);D-2 SYNC GENERATOR BOARD

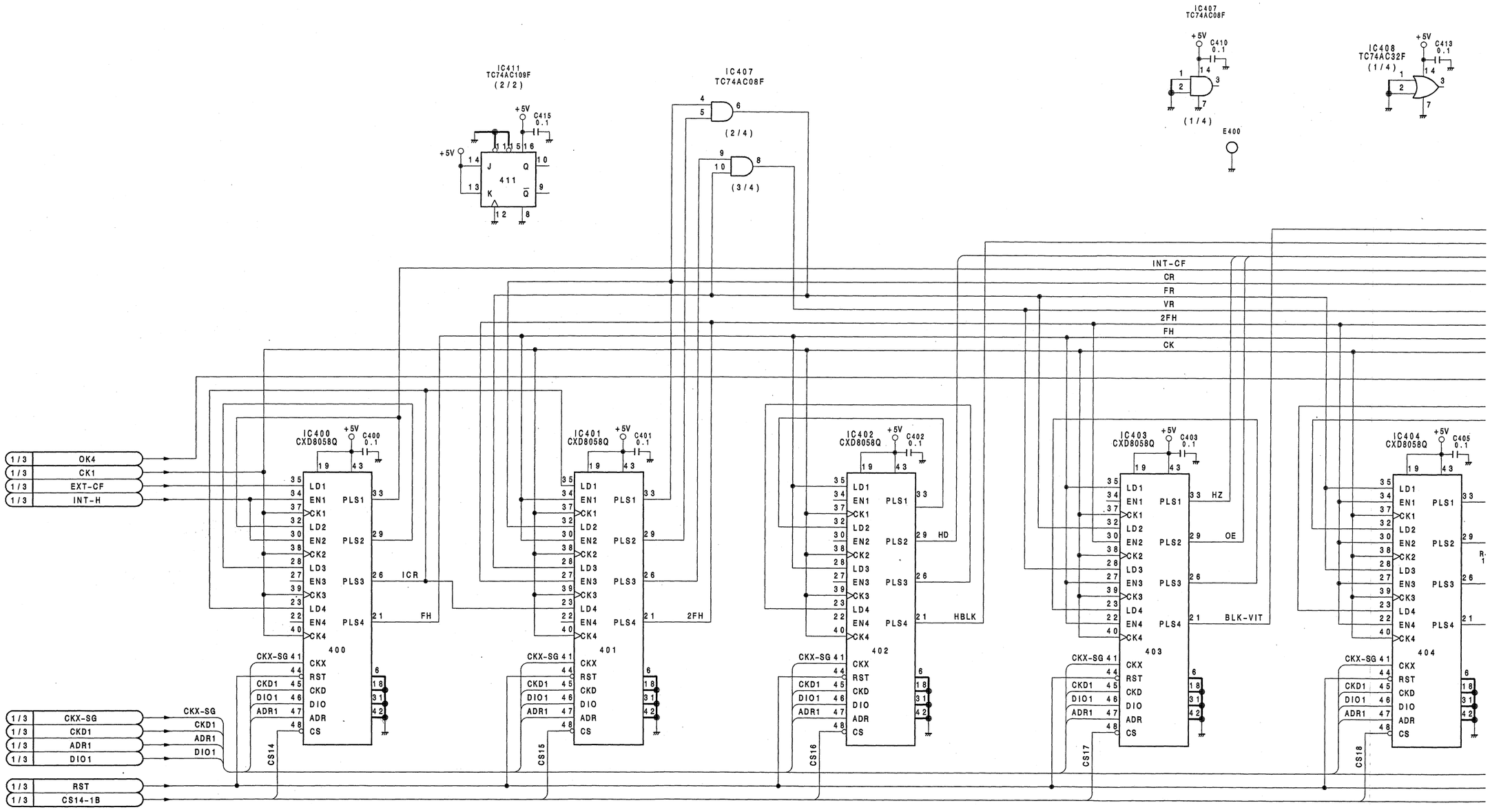

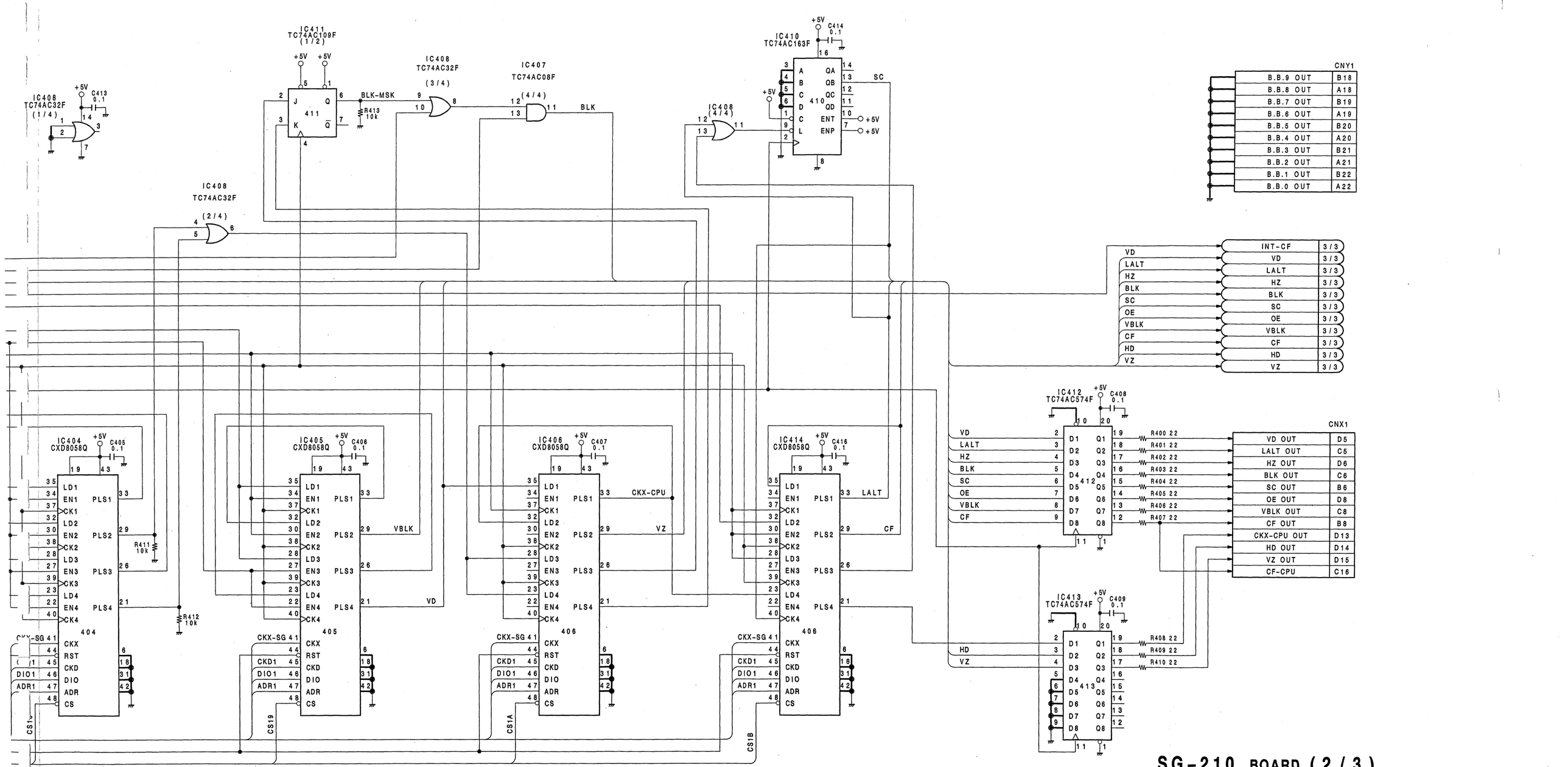

SG-210 BOARD (2/3)

BOARD NO.1-646-023-11
DVS-6000

SG-210(3/3);D-2 SYNC GENERATOR BOARD

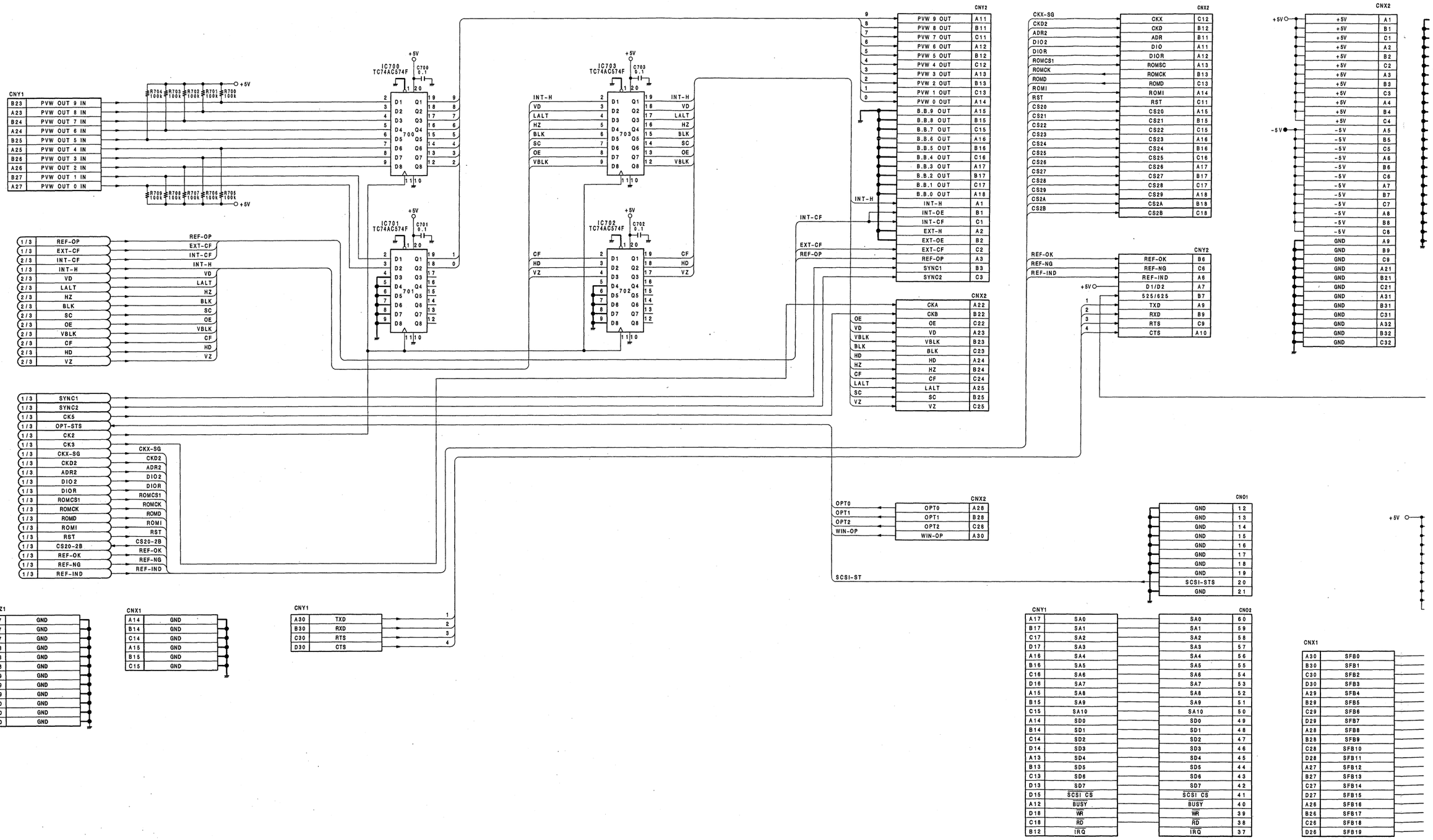

A | B | C | D | E | F | G | H

SG-210(3/3)

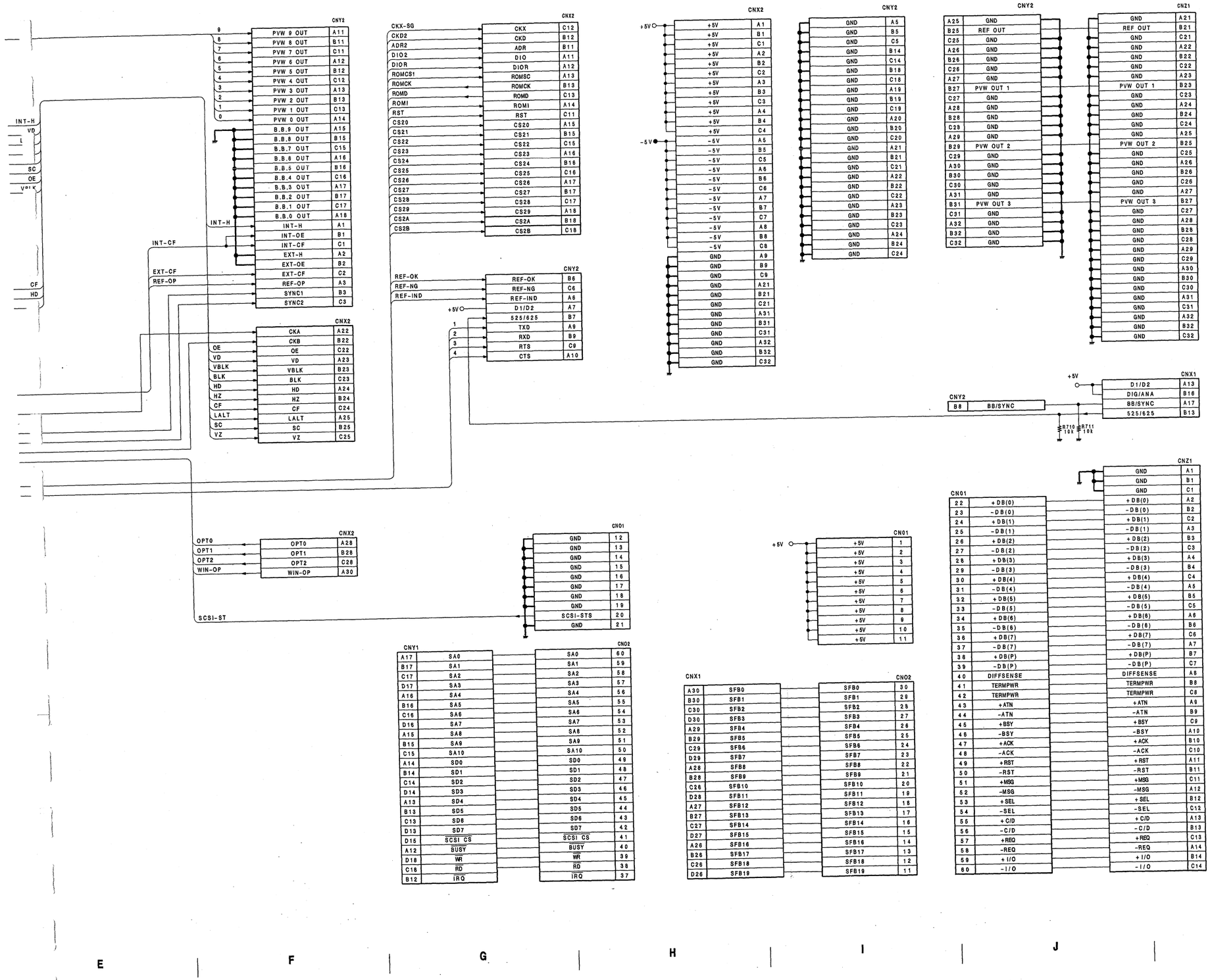

SG-210 BOARD (3/3)

BOARD NO.1-646-023-11
DVS-6000

SG-211(1/3);D-1 SYNC GENERATOR BOARD

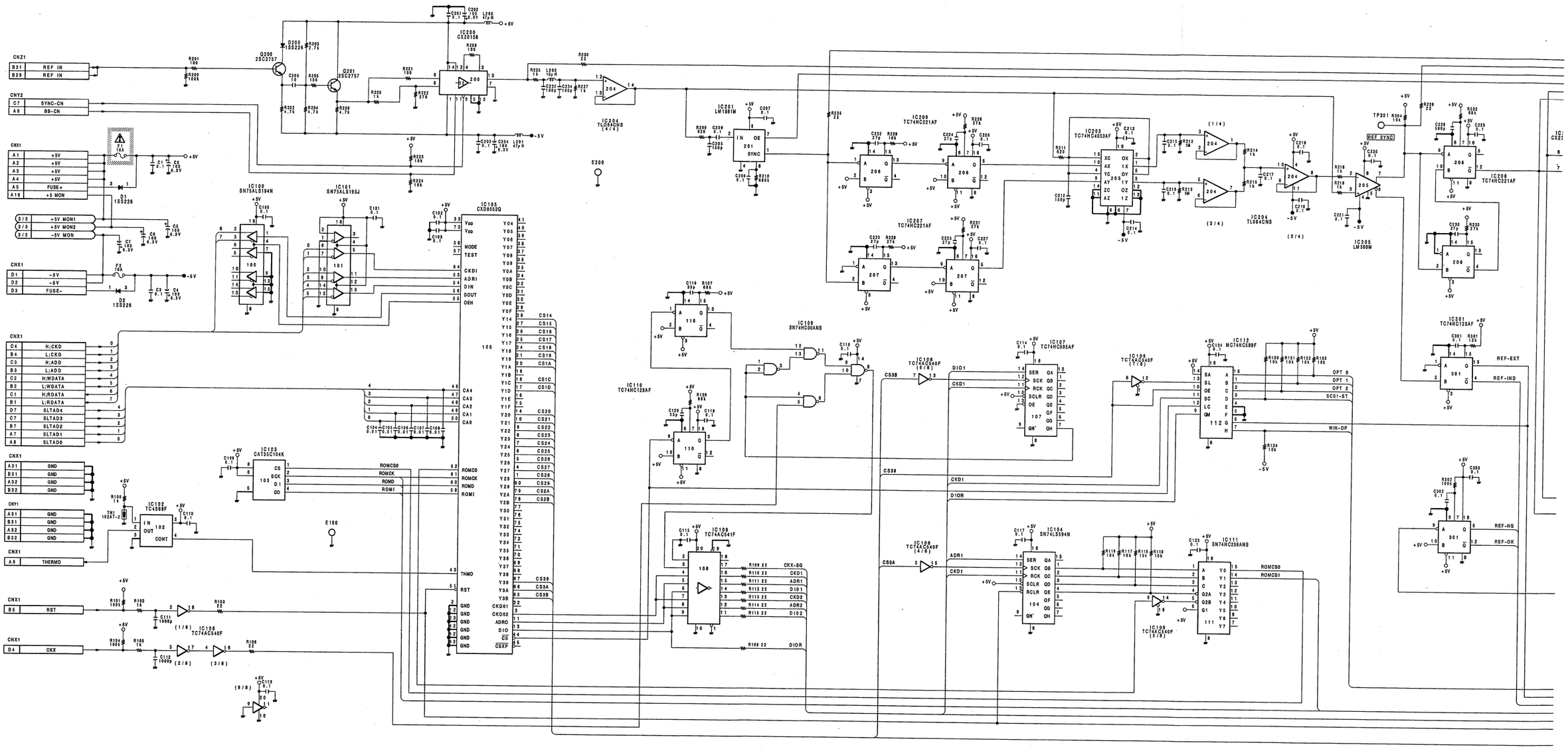

A | B | C | D | E | F | G | H

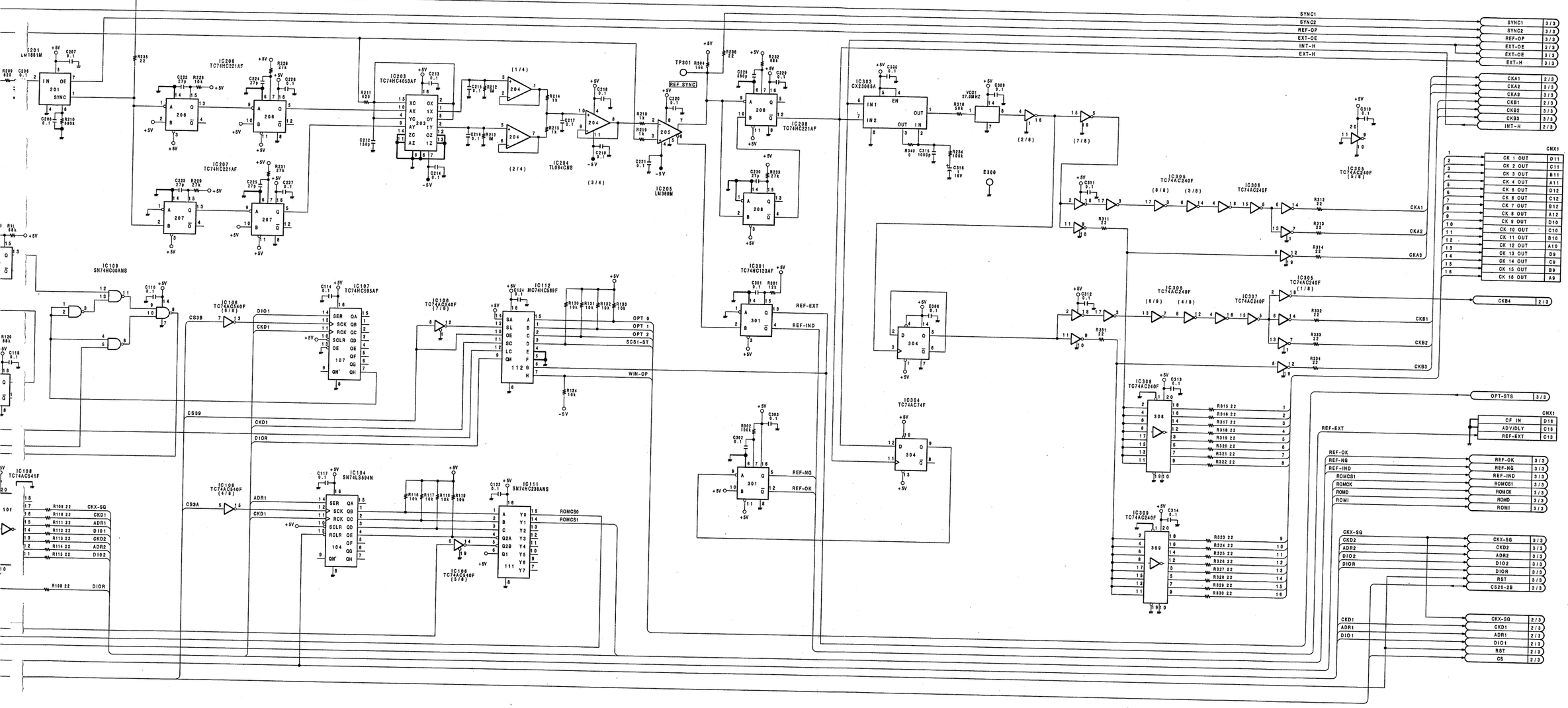

SG-211 BOARD (1/3)

BOARD NO.1-646-024-11
DVS-6000C

SG-211(2/3);D-1 SYNC GENERATOR BOARD

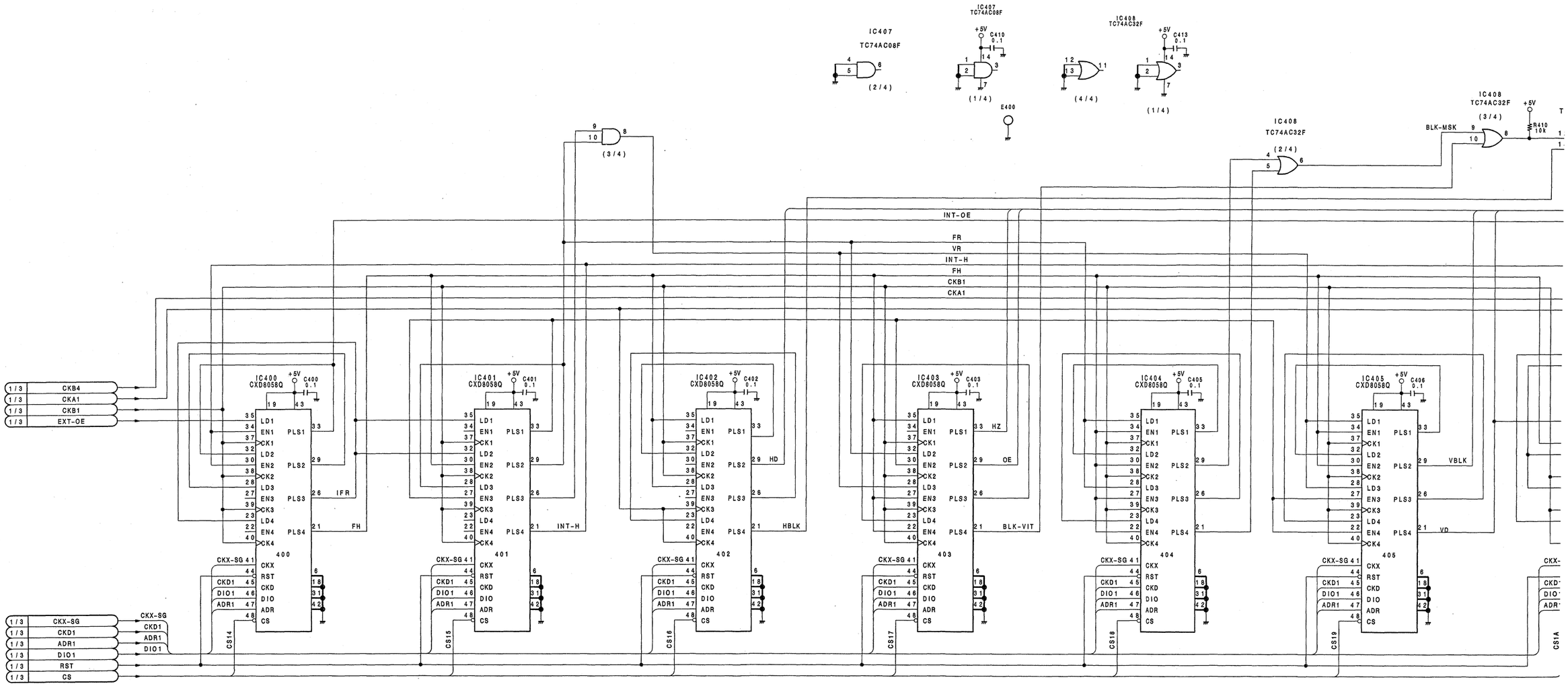

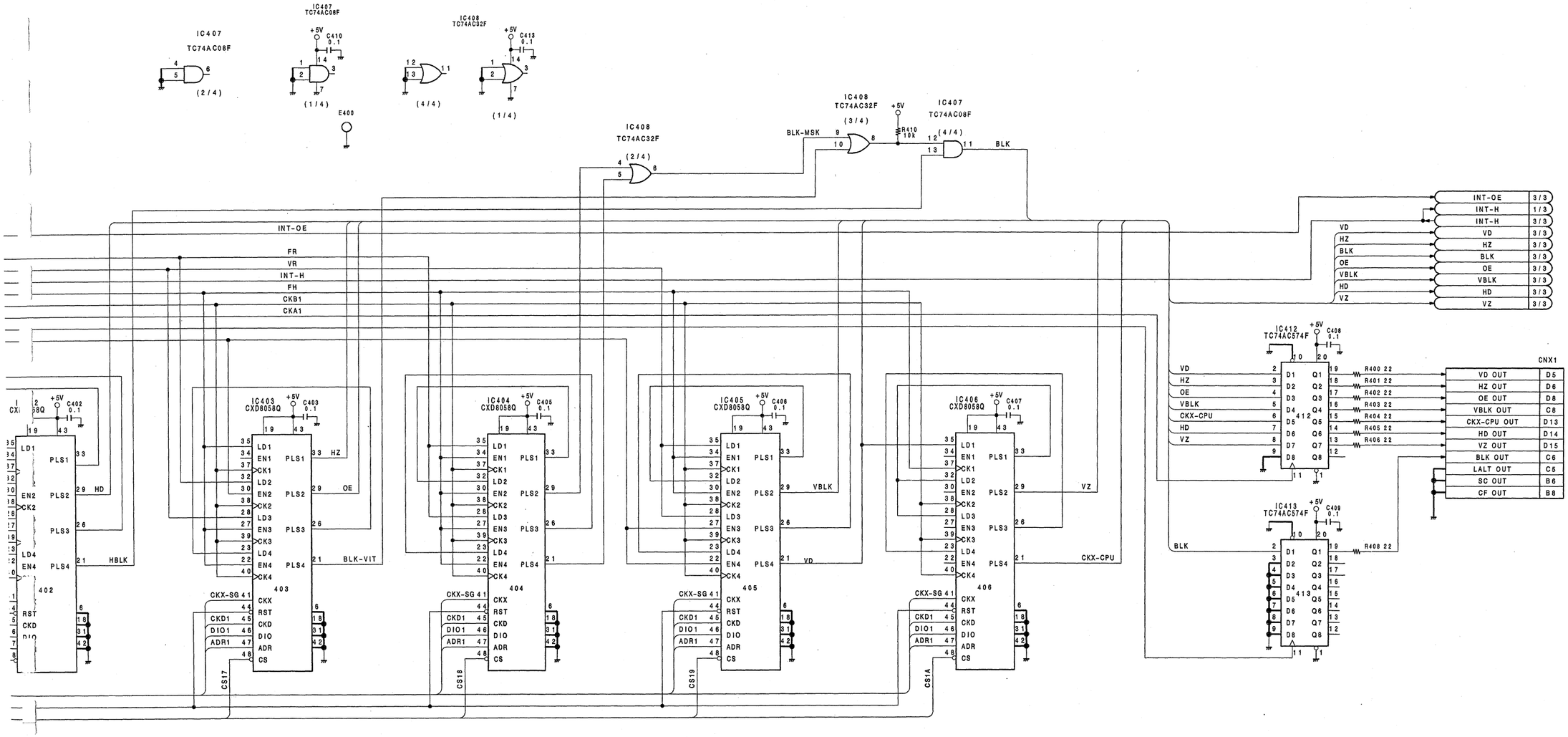

SG-211 BOARD (2/3)

BOARD NO.1-646-024-11
DVS-6000C

SG-211(3/3);D-1 SYNC GENERATOR BOARD

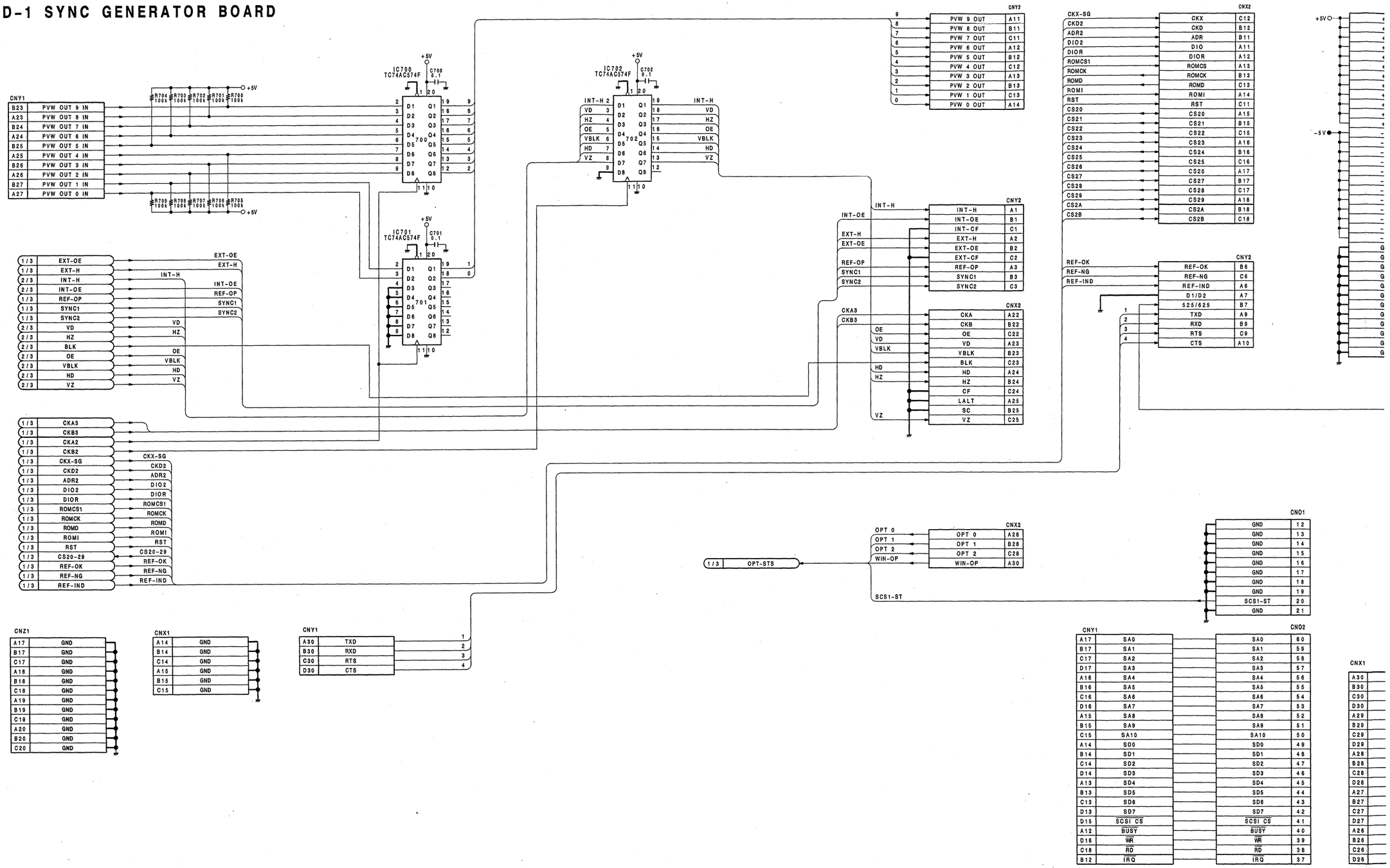

A B C D E F G H

SG-211(3/3)

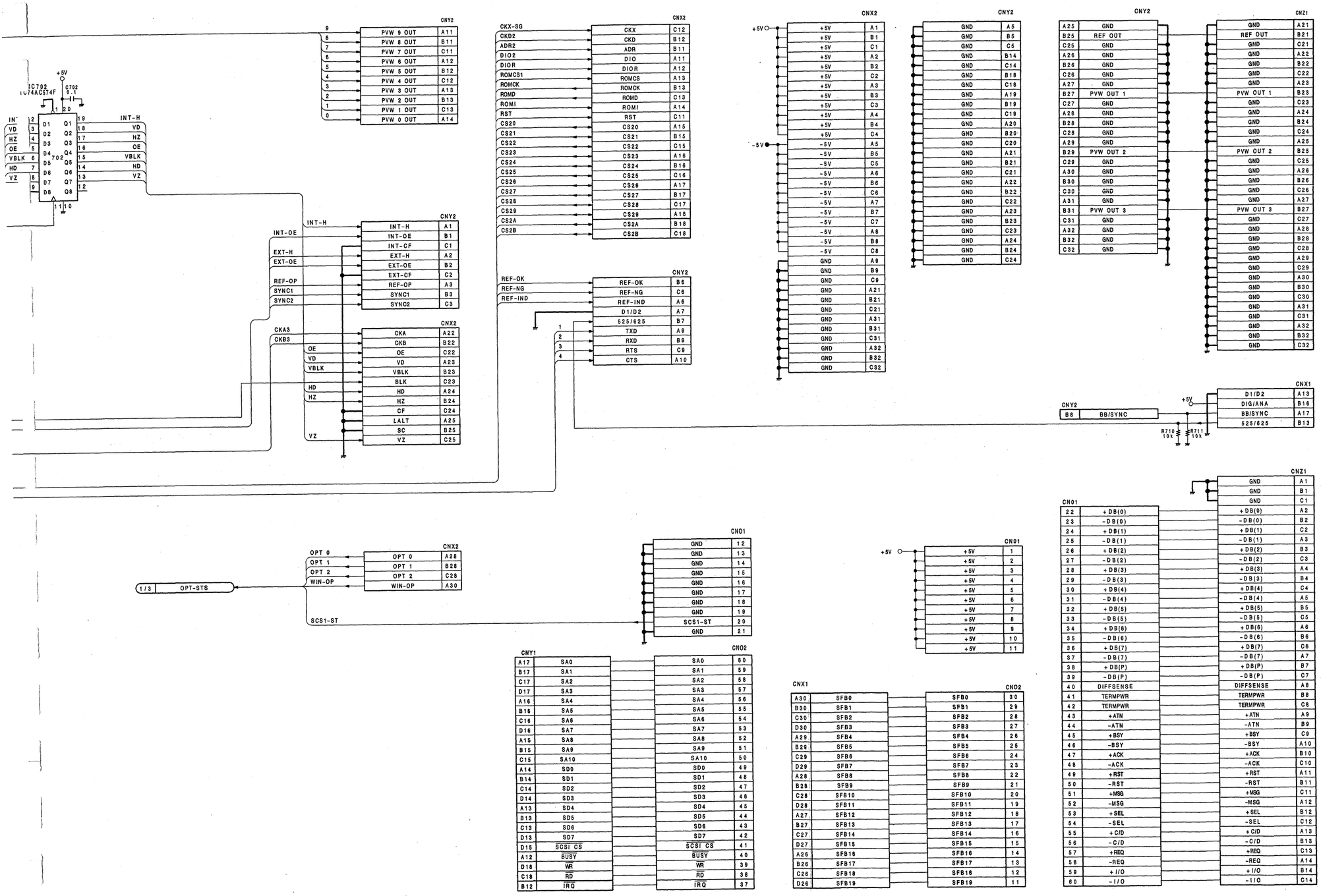

SG-211 BOARD (3 / 3)

BOARD NO.1-646-024-11
DVS-6000C

LE-118;LED BOARD

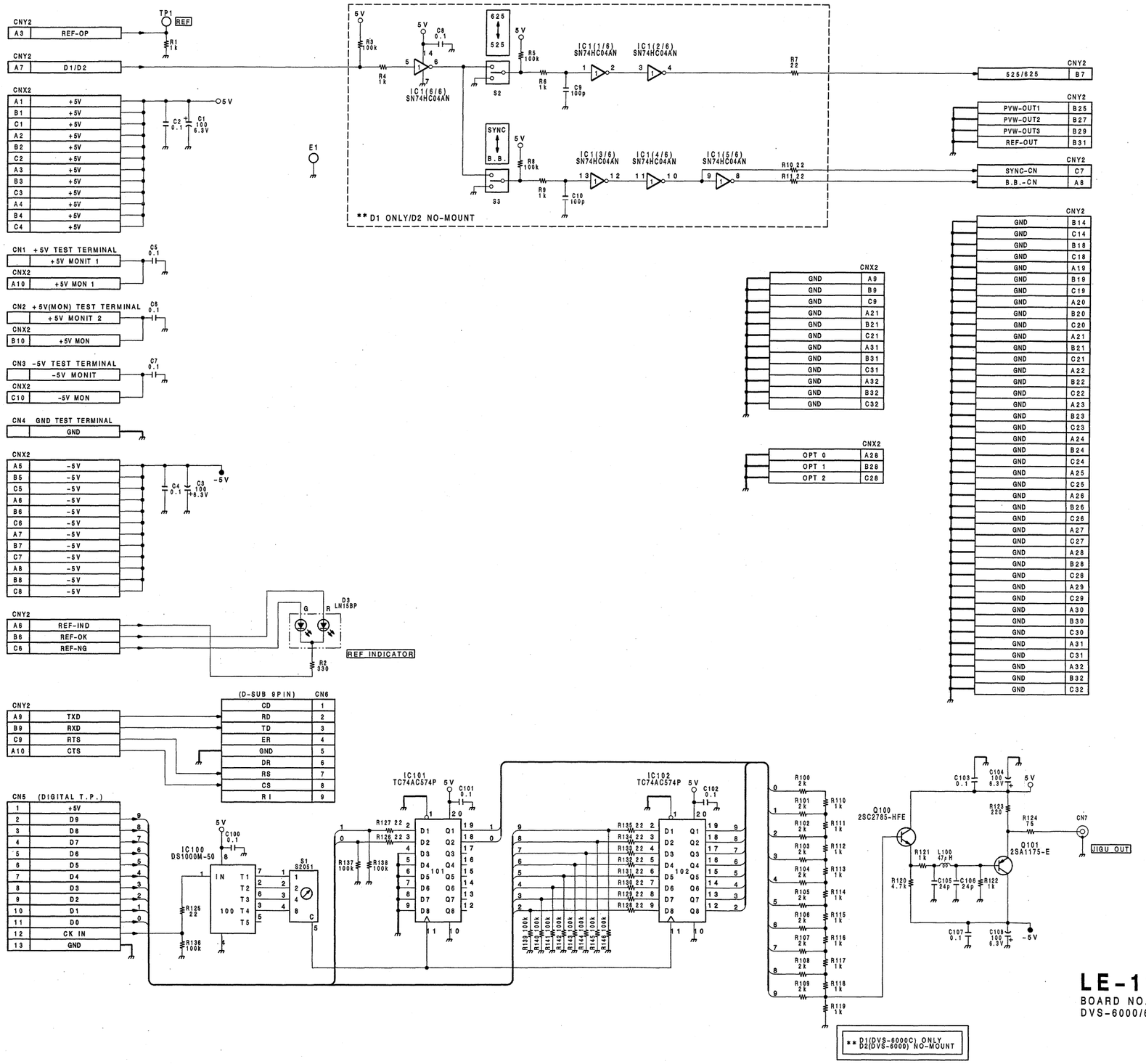

LE-118 BOARD
BOARD NO.1-646-034-11
DVS-6000/6000C

SD-30(1/3)(BKDS-6060);DIGITAL EDIT PVW/REF OUTPUT BOARD

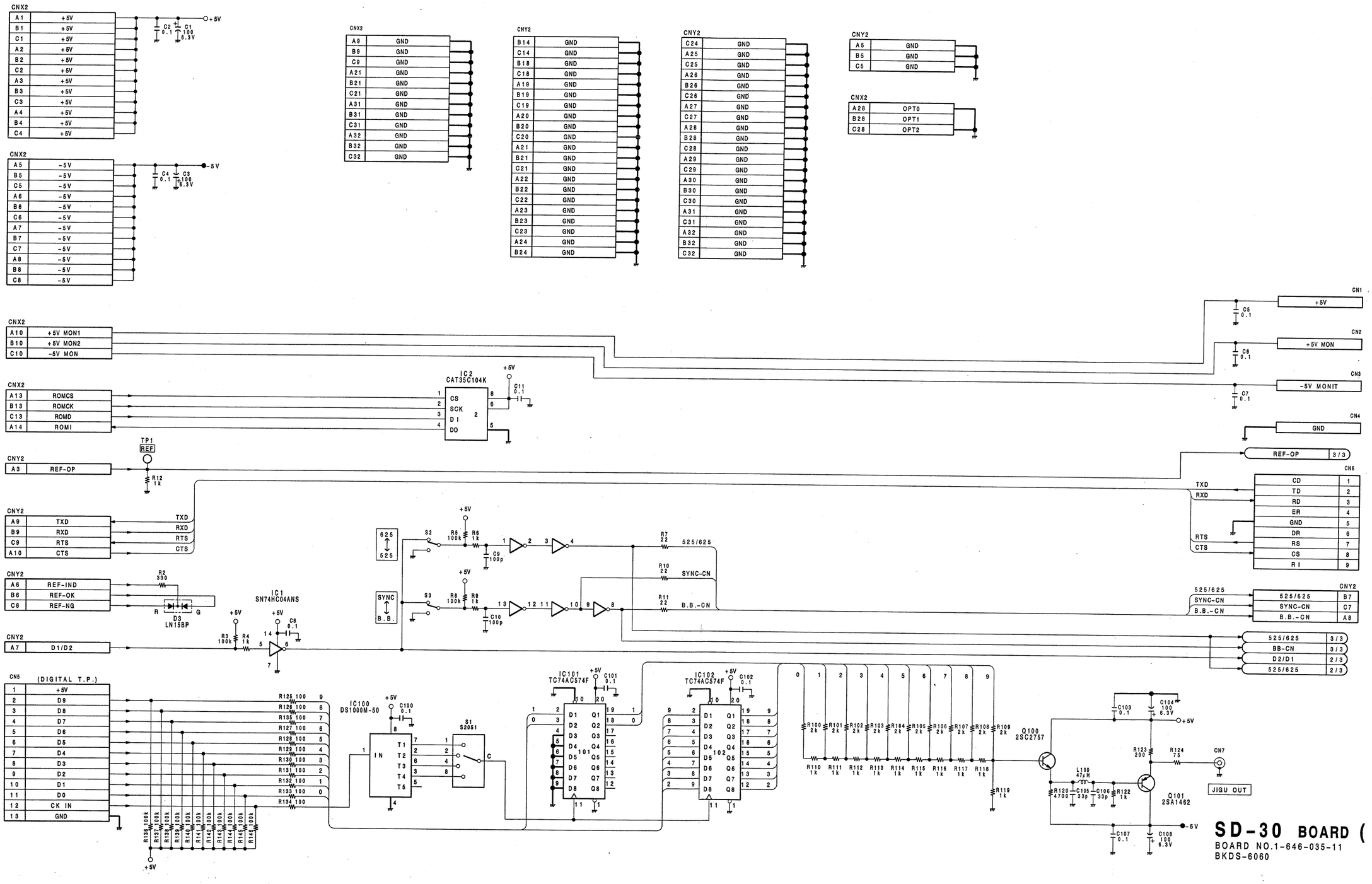

SD-30 BOARD (1/3)

BOARD NO.1-646-035-11
BKDS-6060

A B C D E F G H

1

2

3

4

5

D (1/3)

I J K L M N O P

SD-30(2/3)(BKDS-6060);DIGITAL EDIT PVW/REF OUTPUT BOARD

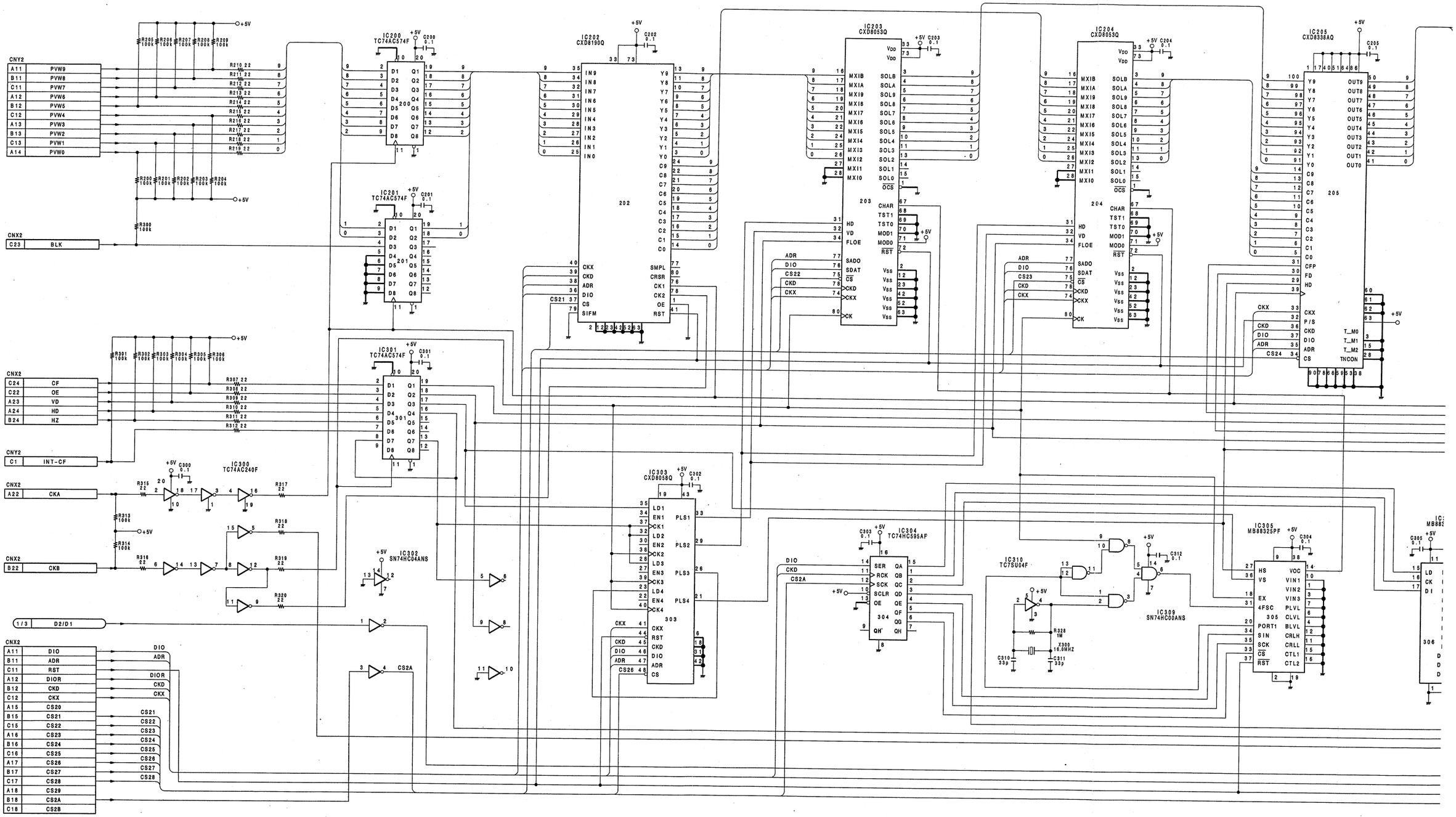

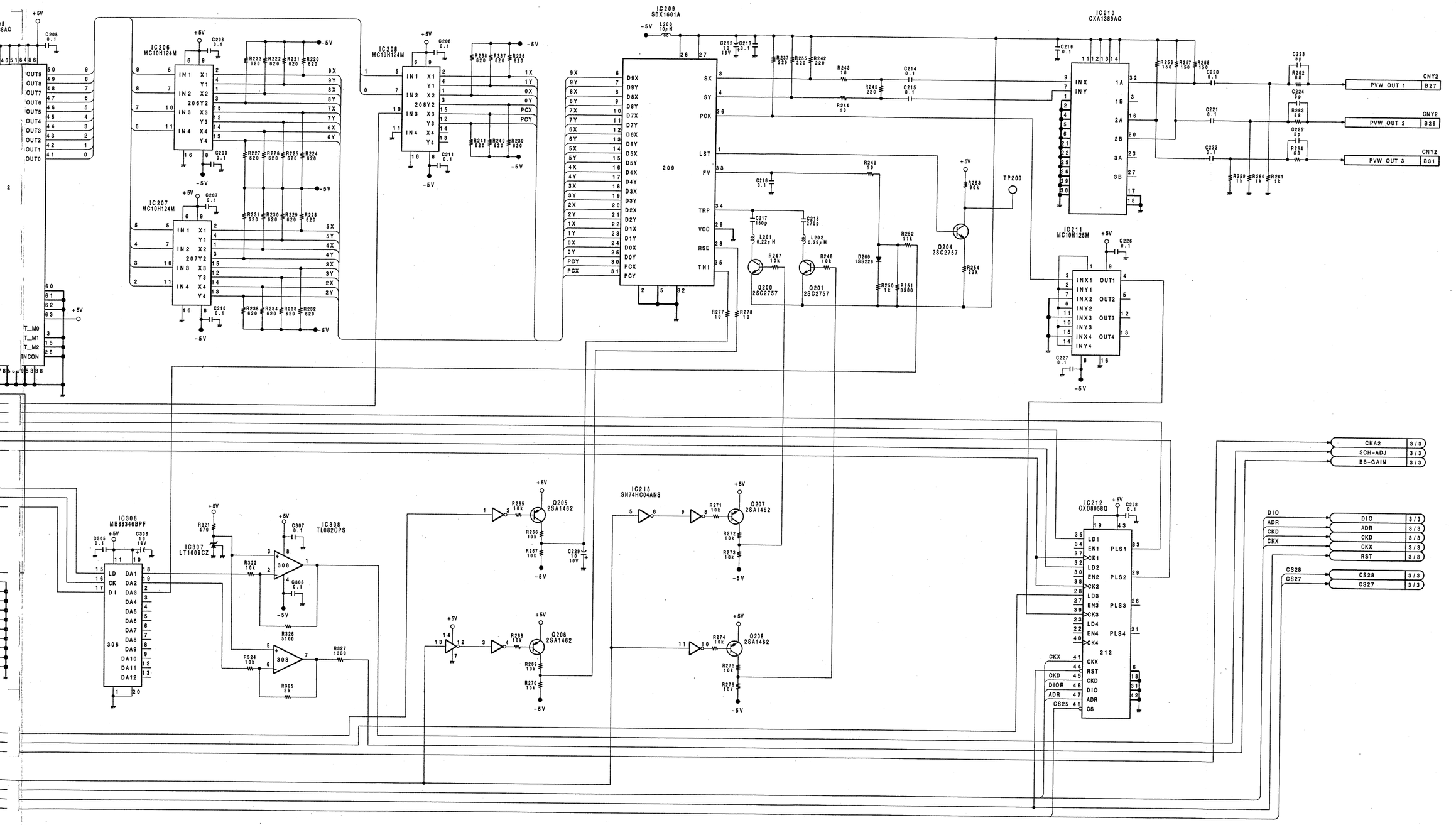

SD-30 BOARD (2/3)

BOARD NO.1-646-035-11
BKDS-6060

SD-30(3/3)(BKDS-6060);DIGITAL EDIT PVW/REF OUTPUT BOARD

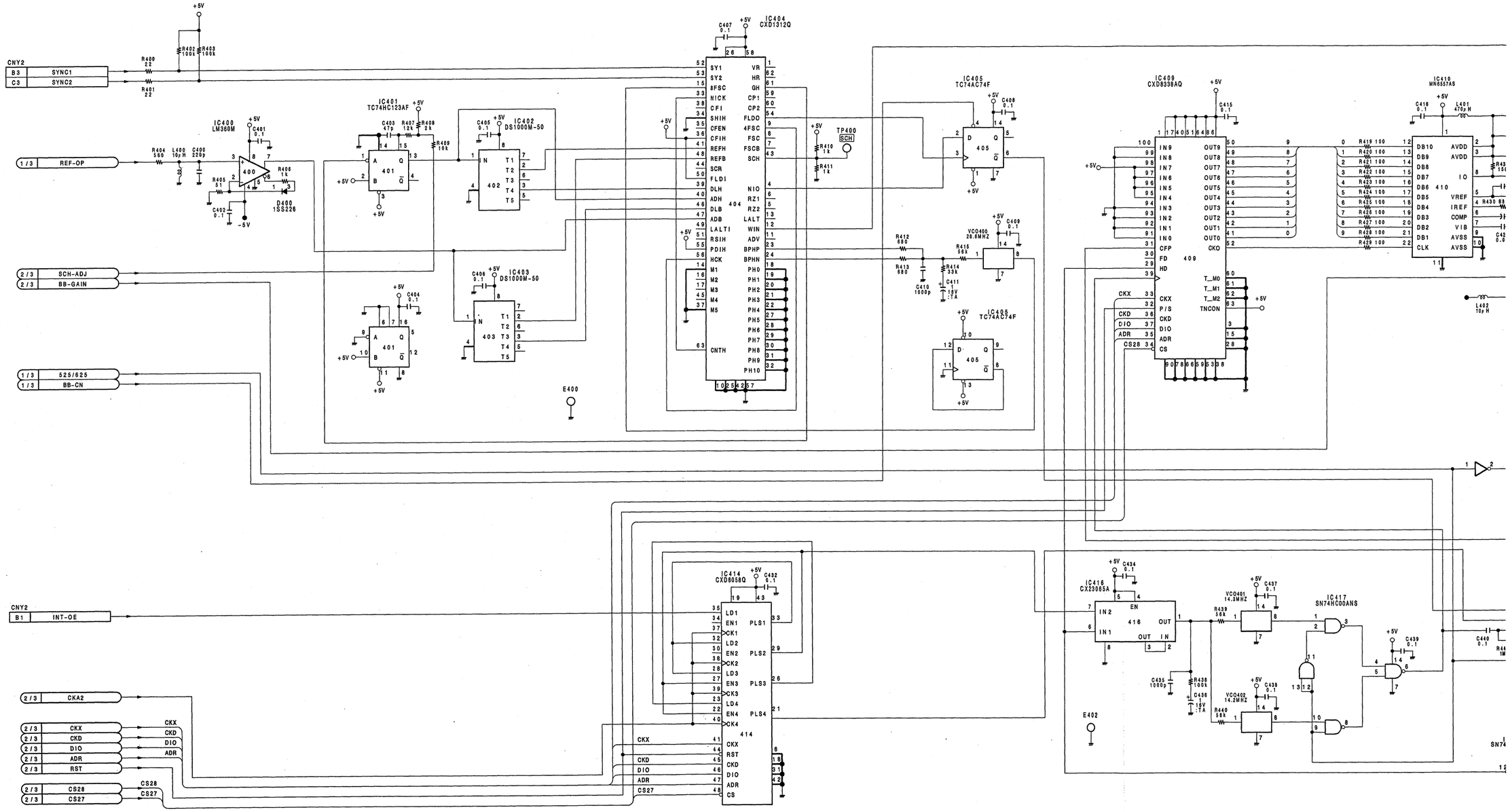

A | B | C | D | E | F | G | H

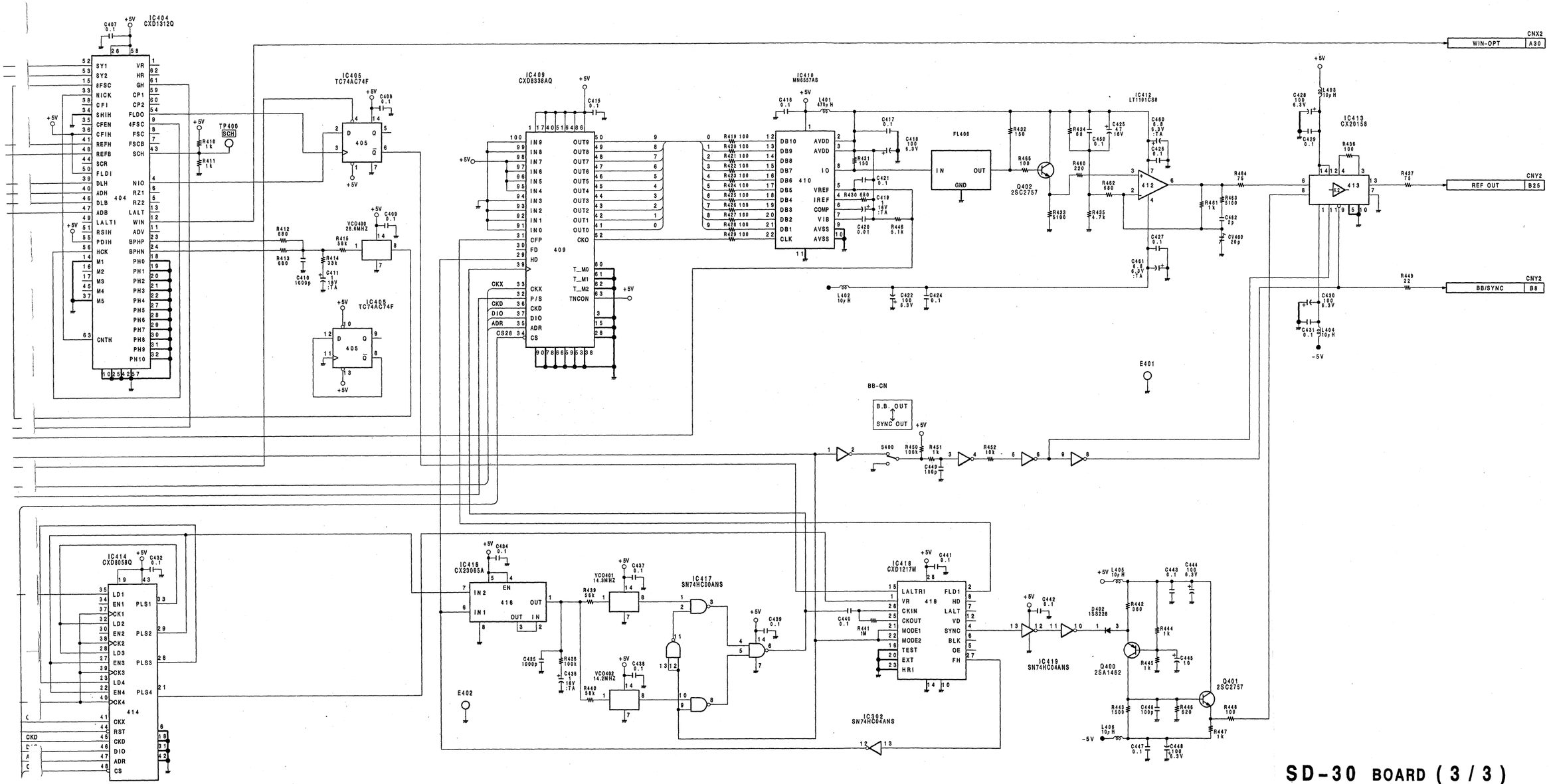

SD-30 BOARD (3/3)

BOARD NO.1-646-035-11
BKDS-6060

DA-71(1/3)(BKDS-6061);ANALOG EDIT PVW/REF OUTPUT BOARD:DVS-6000 ONLY

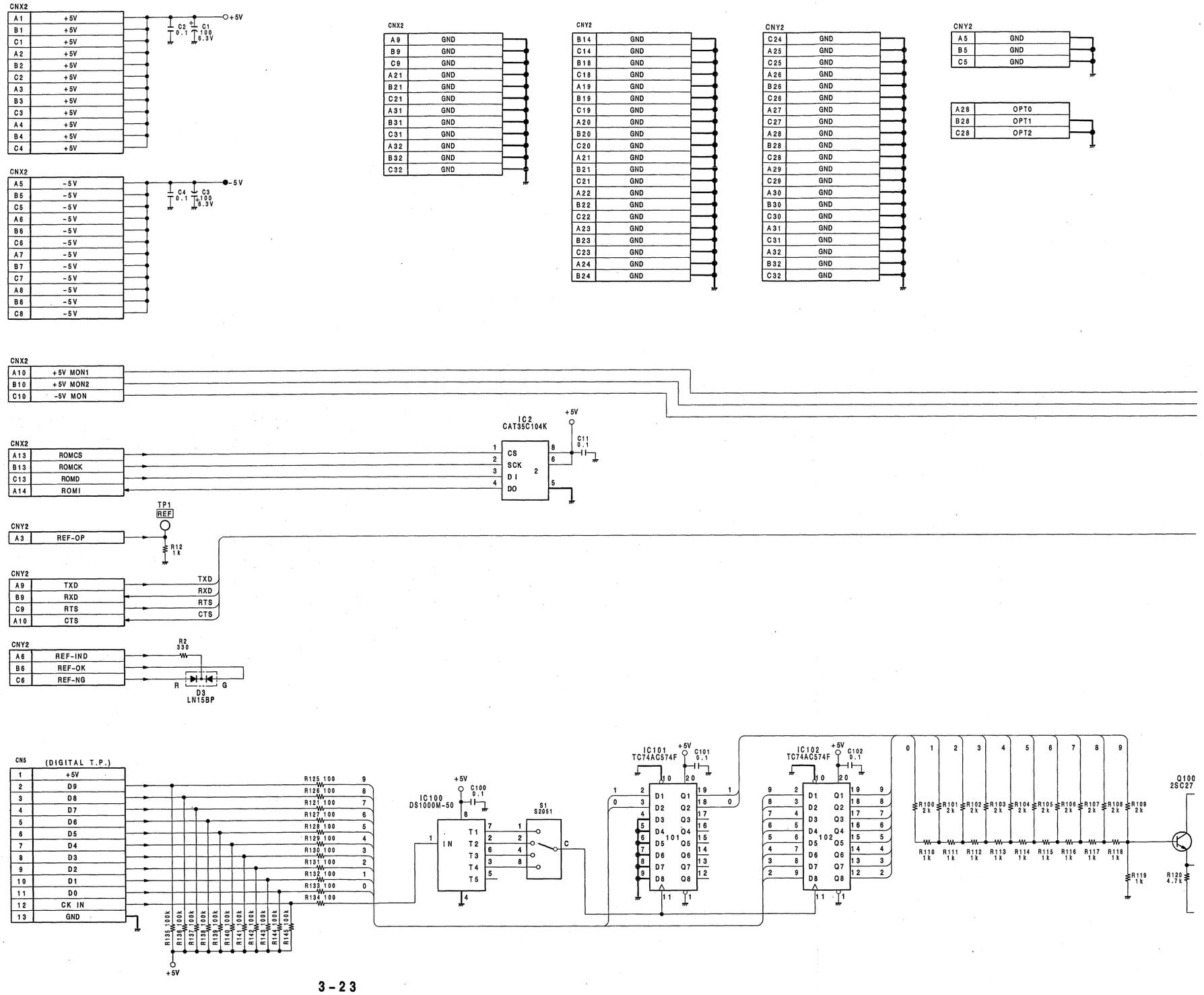

A | B | C | D | E | F | G | H

O LY

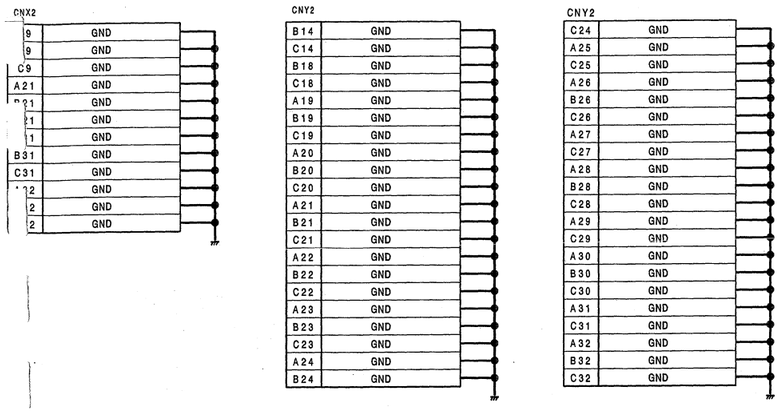

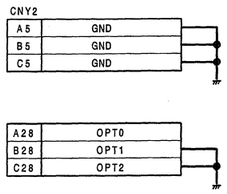

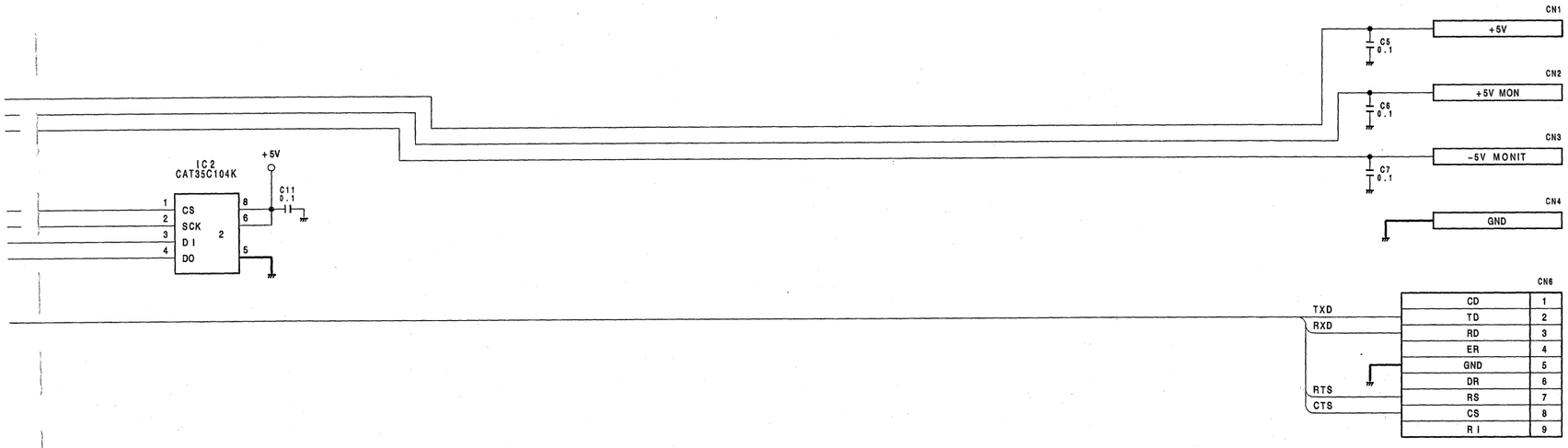

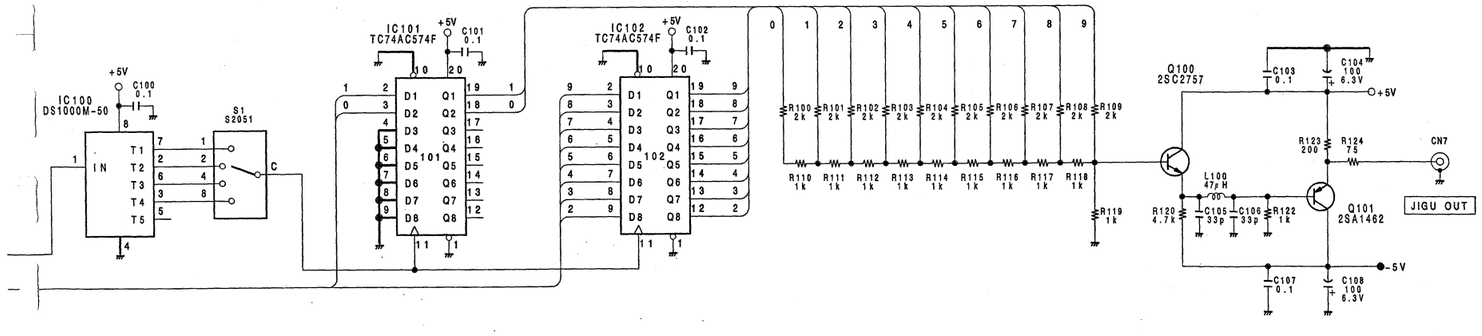

DA-71 BOARD (1/3)

BOARD NO.1-646-036-11
BKDS-6061

DA-71(2/3)(BKDS-6061);ANALOG EDIT PVW/REF OUTPUT BOARD:DVS-6000 ONLY

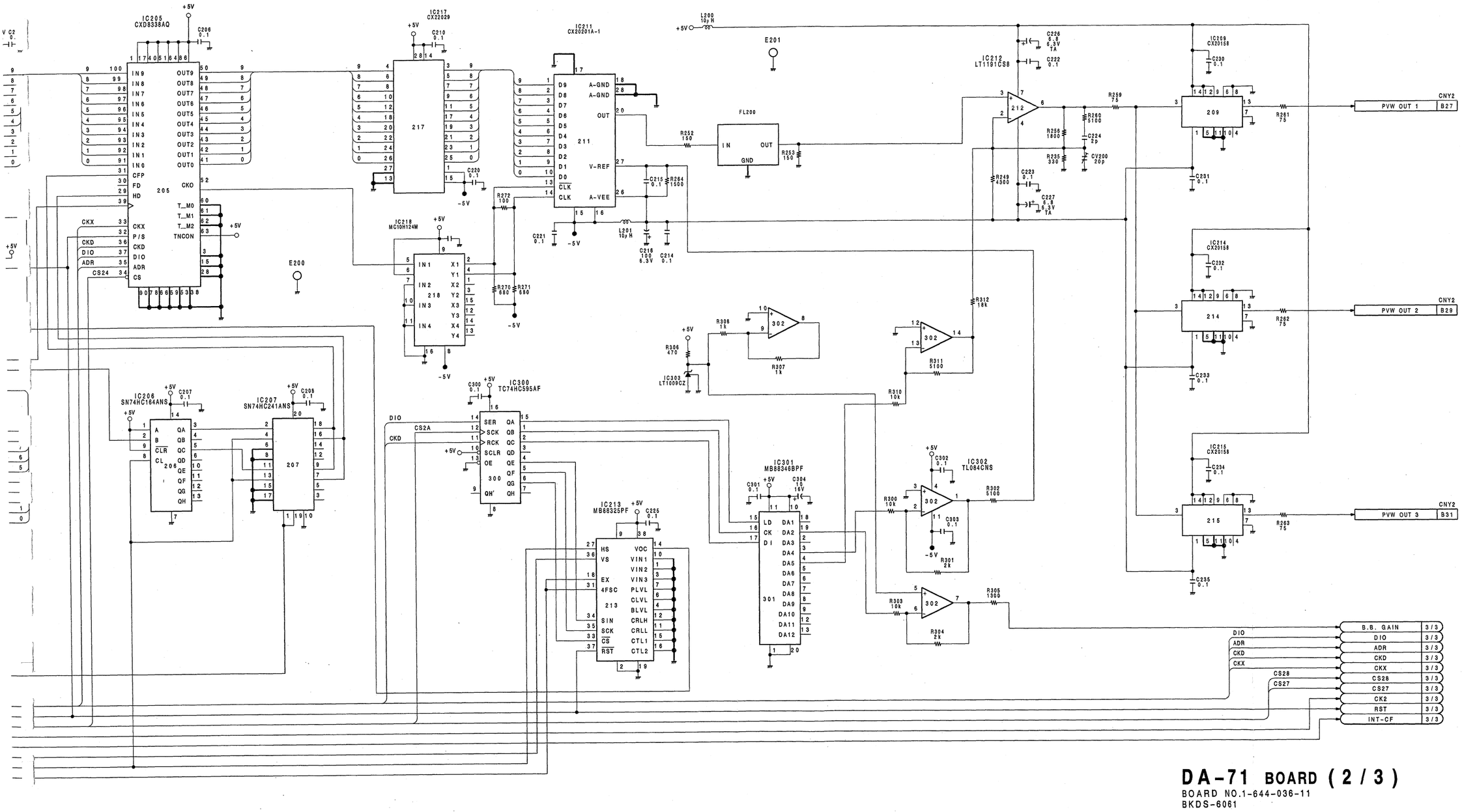

DA-71 BOARD (2/3)

BOARD NO.1-644-036-11
BKDS-6061

DA-71(3/3)(BKDS-6061);ANALOG EDIT PVW/REF OUTPUT BOARD:DVS-6000 ONLY

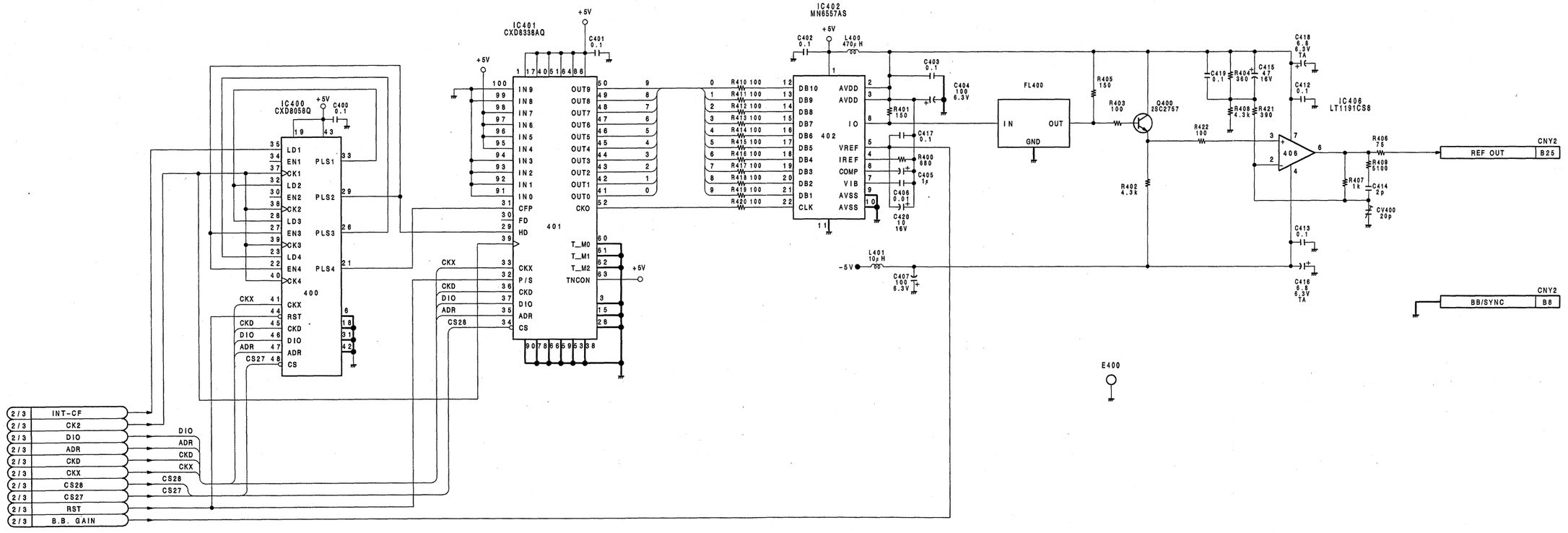

DA-71 BOARD (3/3)

BOARD NO.1-646-036-11
BKDS-6061

DA-72(1/4)(BKDS-6062);ANALOG EDIT PVW/REF OUTPUT BOARD:DVS-6000C ONLY

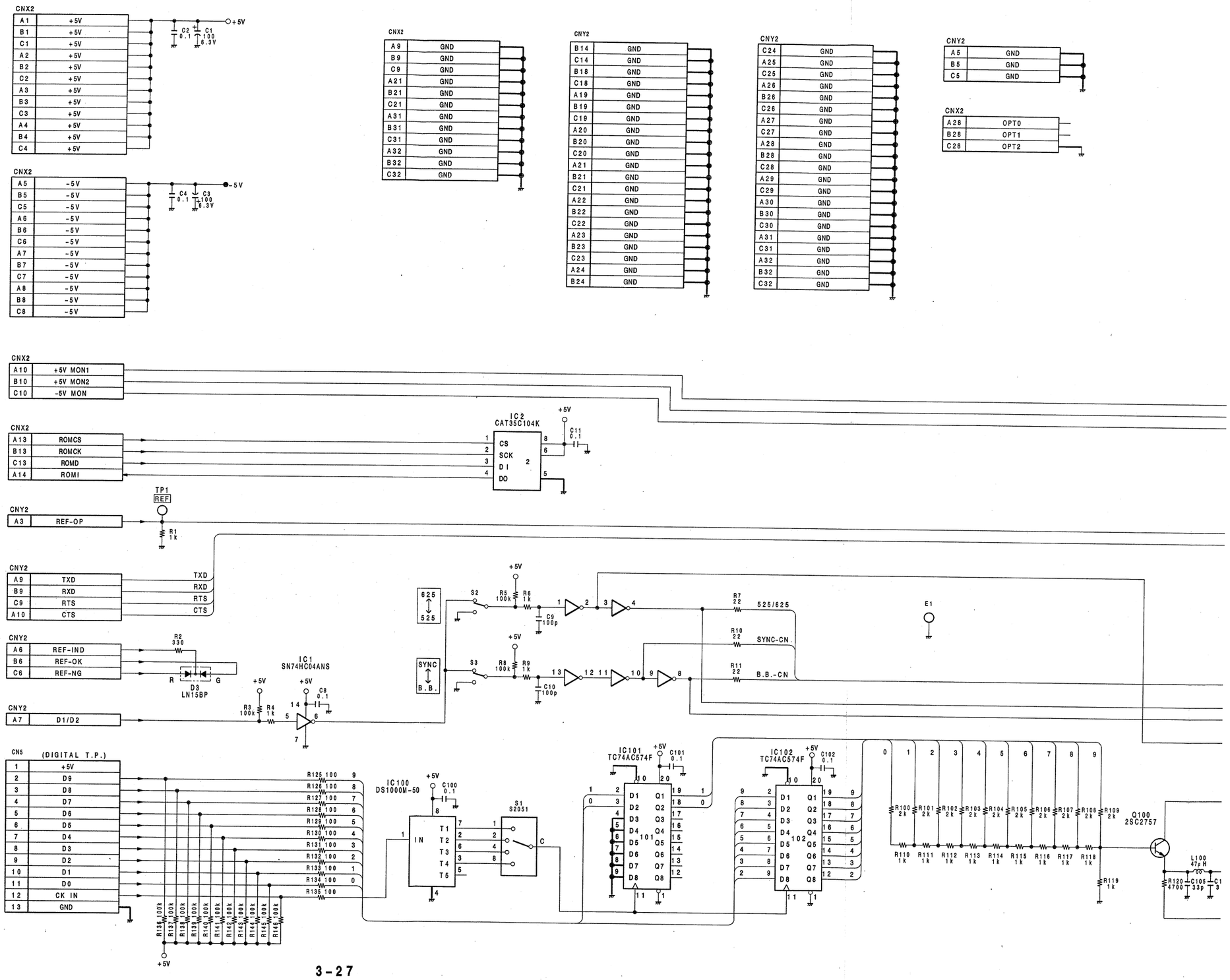

A B C D E F G H

O LY

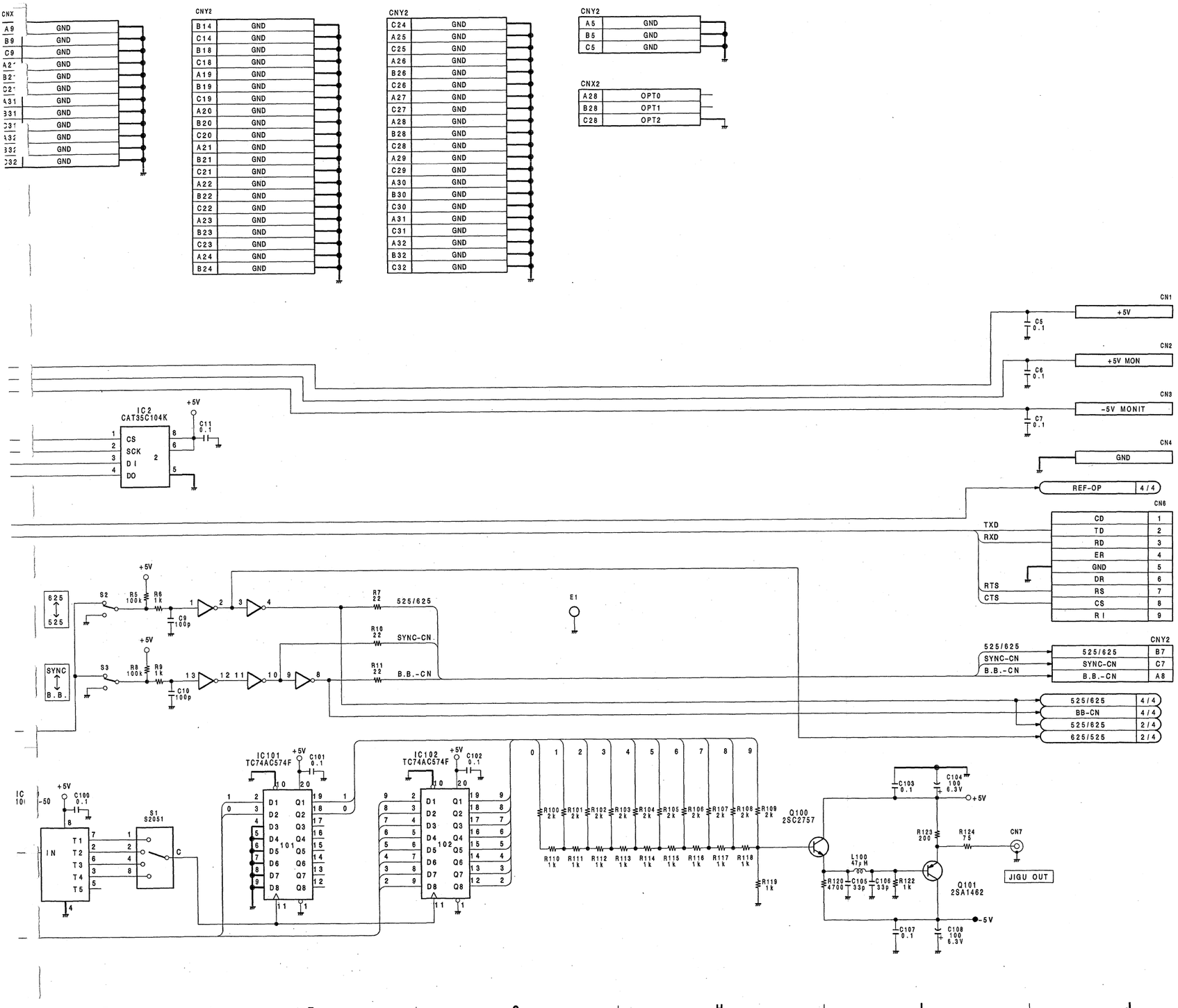

DA-72 BOARD (1/4)

BOARD NO.1-646-037-11
BKDS-6062

DA-72(2/4)(BKDS-6062);ANALOG EDIT PVW/REF OUTPUT BOARD:DVS-6000C ONLY

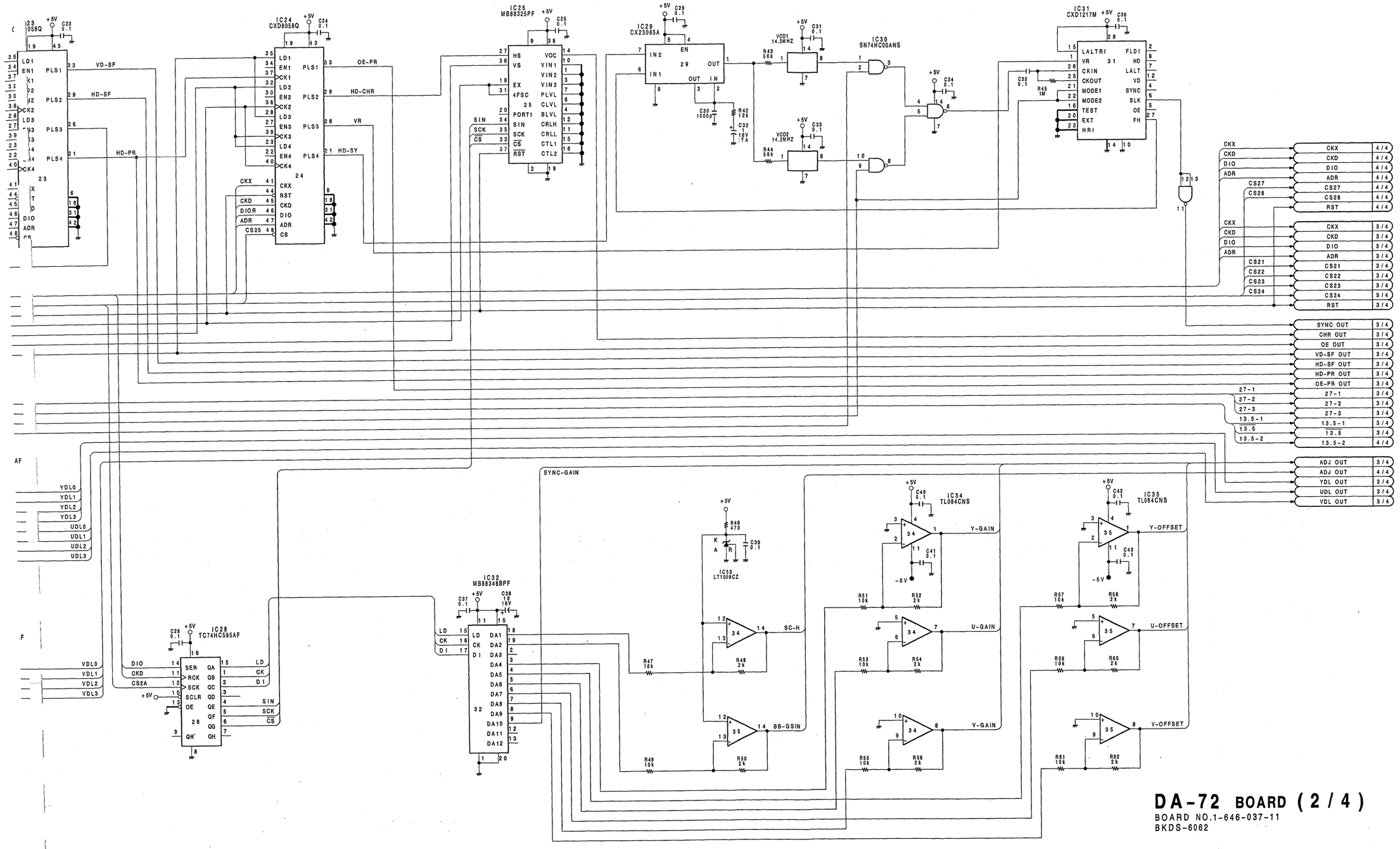

DA-72 BOARD (2/4)

BOARD NO.1-646-037-11
BKDS-6062

DA-72(3/4)(BKDS-6062);ANALOG EDIT PVW/REF OUTPUT BOARD :DVS-6000C ONLY

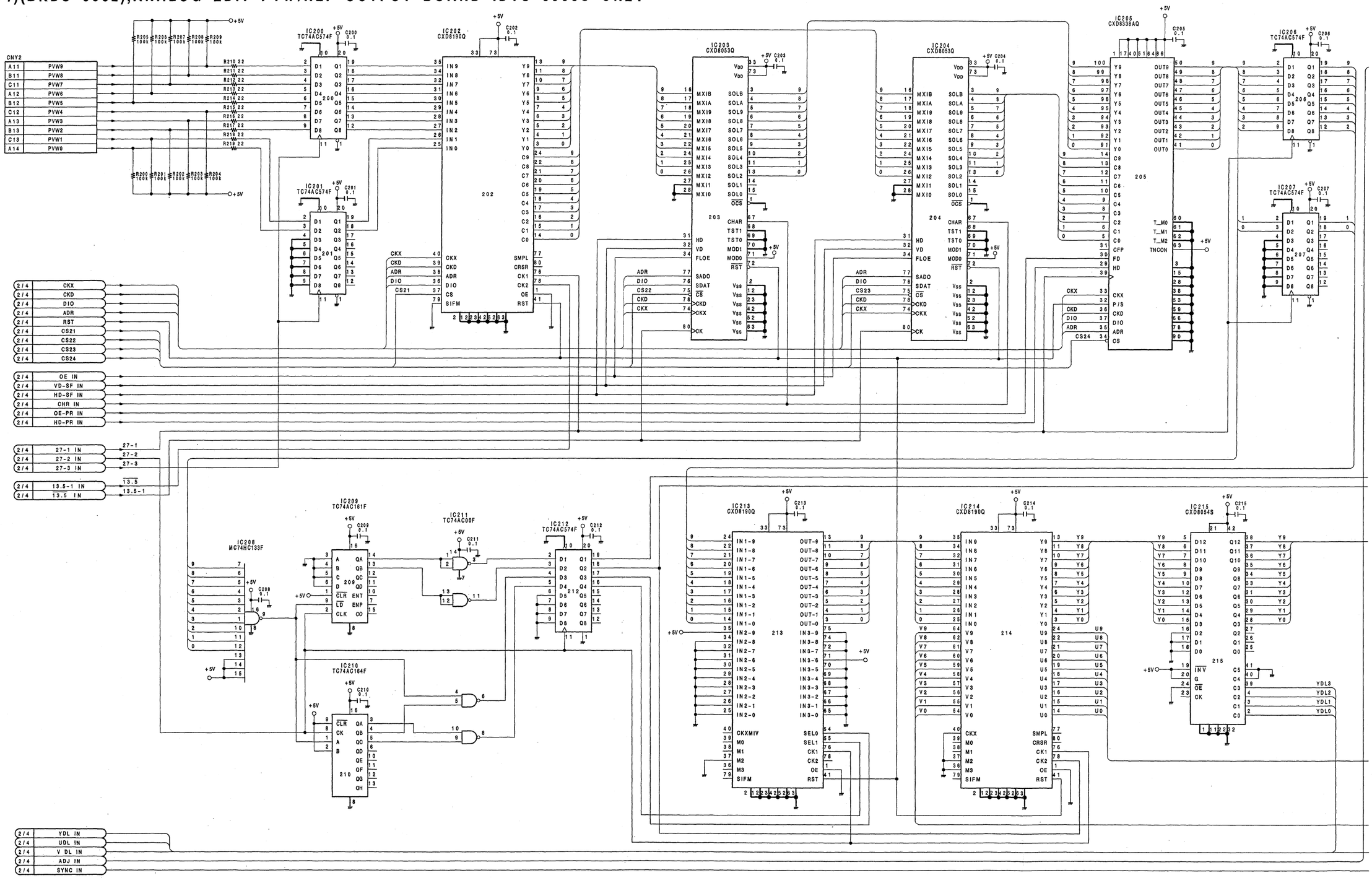

A | B | C | D | E | F | G | H

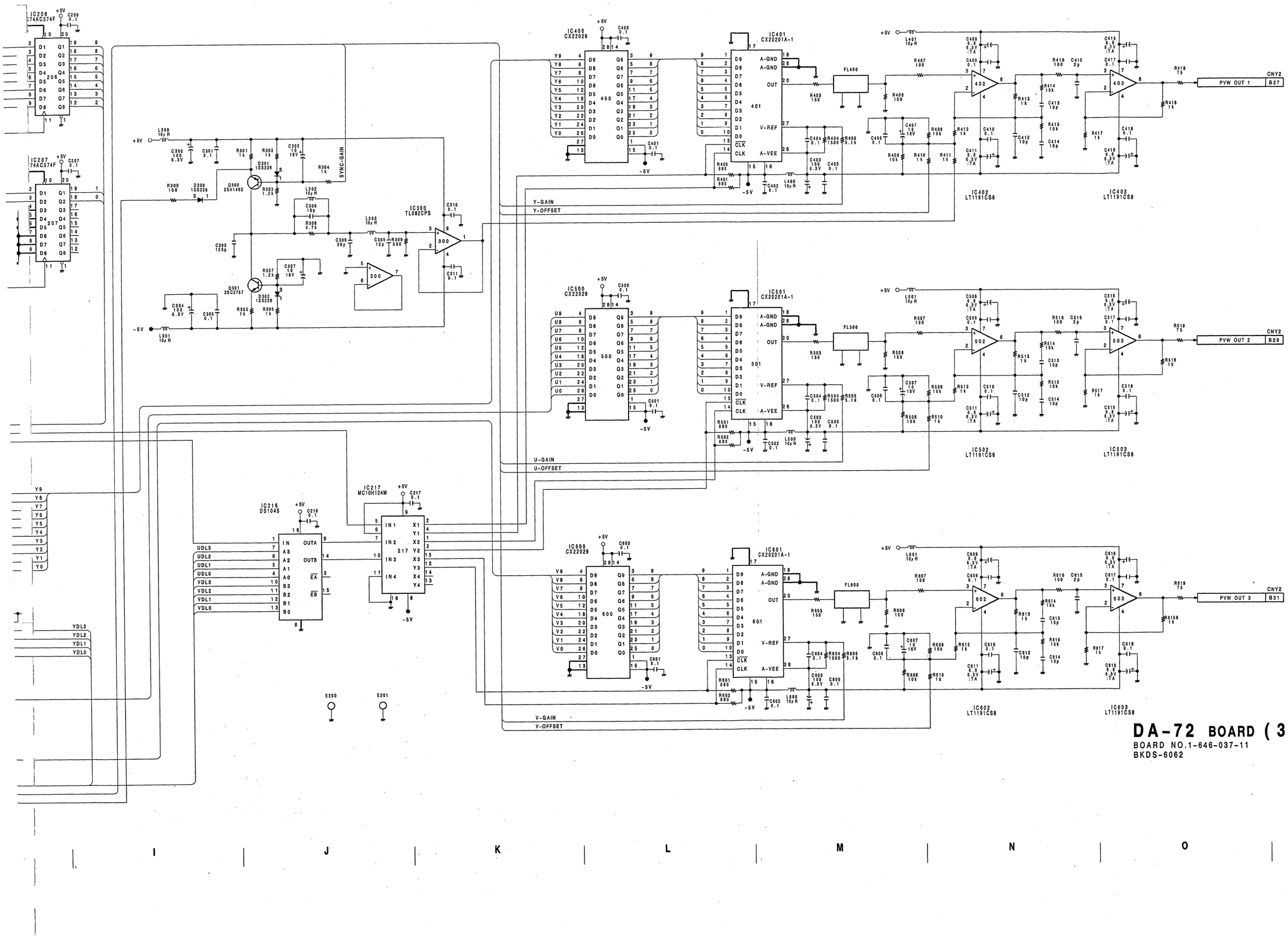

DA-72 BOARD (3/4)

BOARD NO.1-646-037-11
BKDS-6062

DA-72(4/4)(BKDS-6062);ANALOG EDIT PVW/REF OUTPUT BOARD:DVS-6000C ONLY

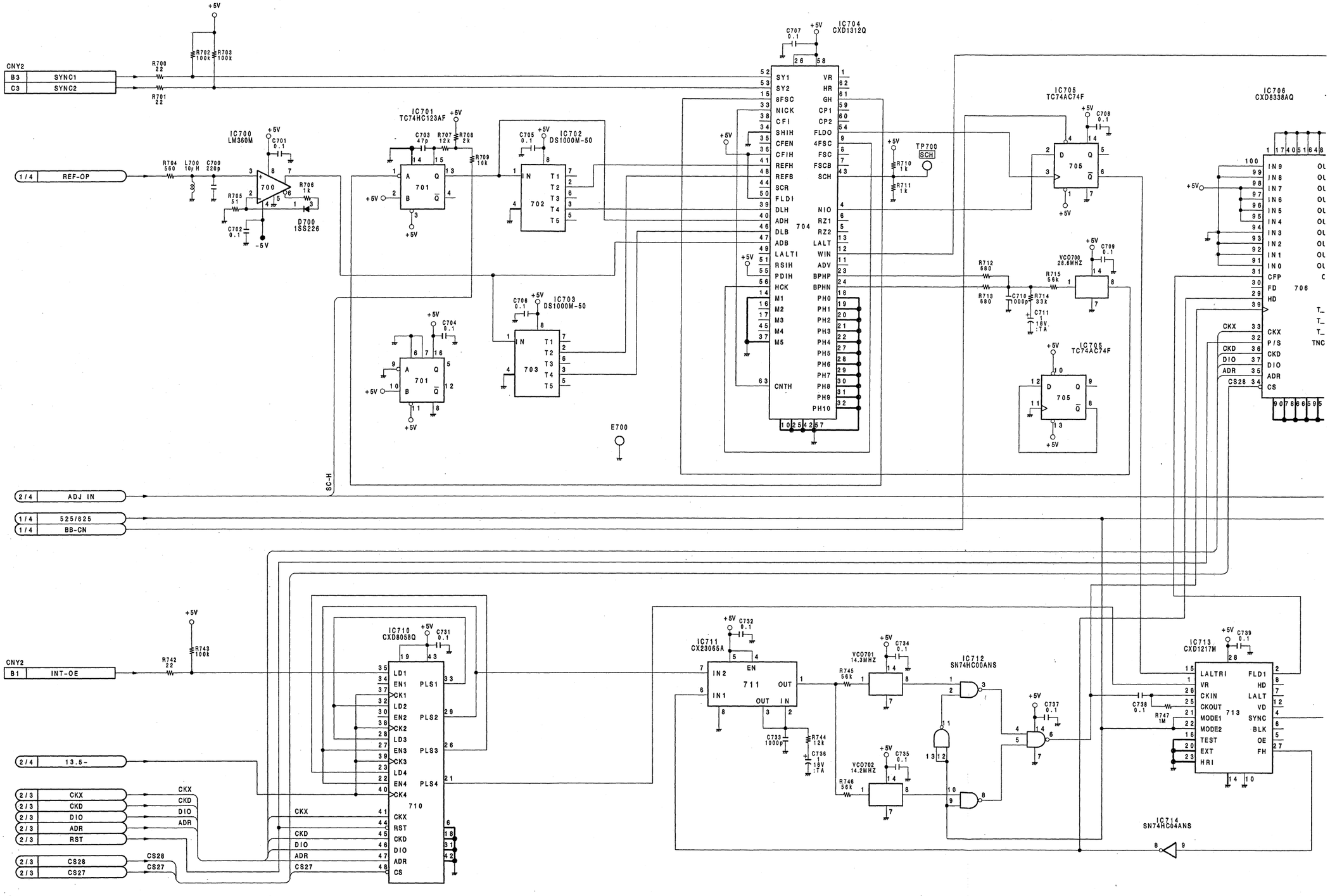

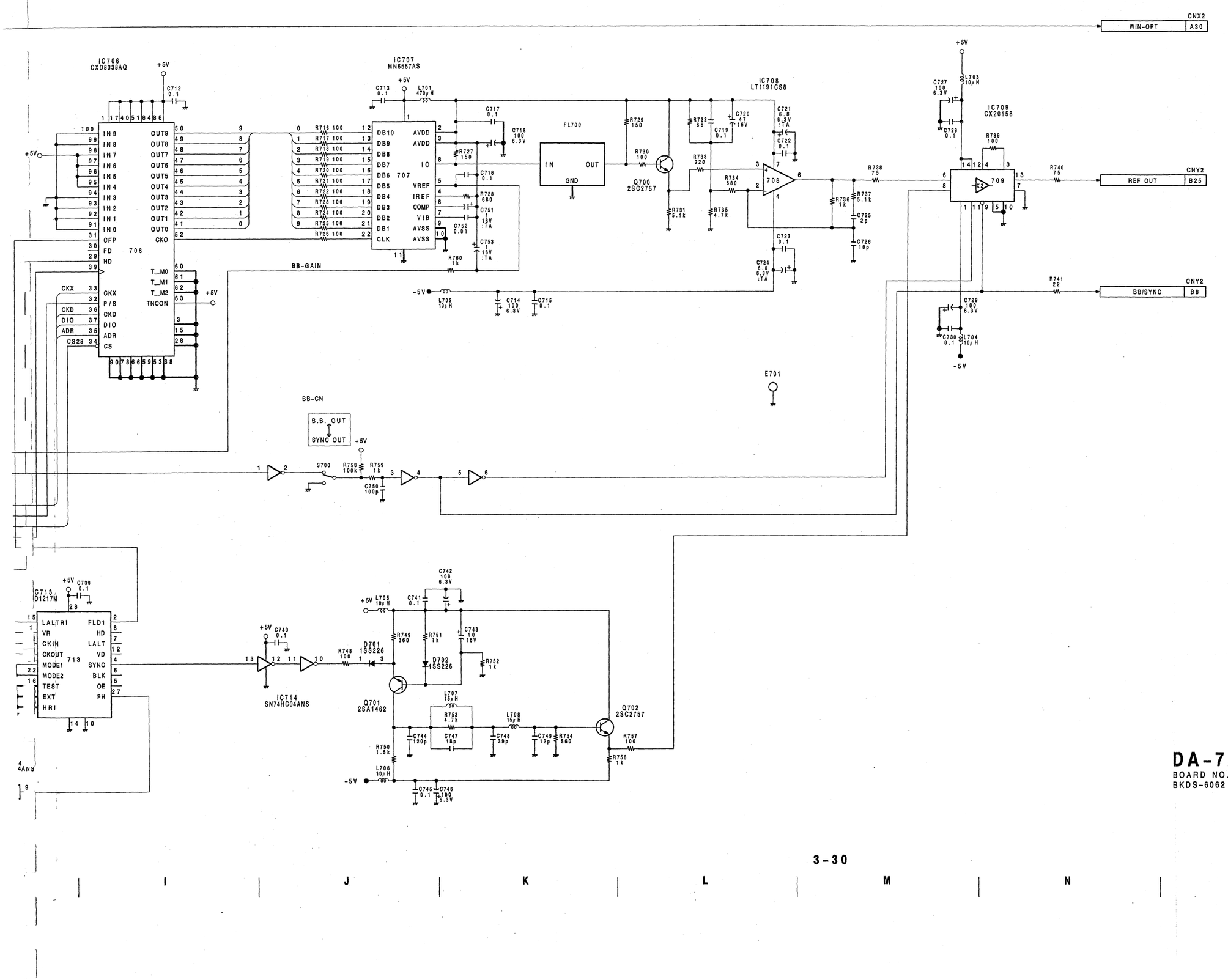

DA-72 BOARD (4/4)

BOARD NO.1-646-037-11
BKDS-6062

WKG-10(1/7);WIPE GENERATOR BOARD

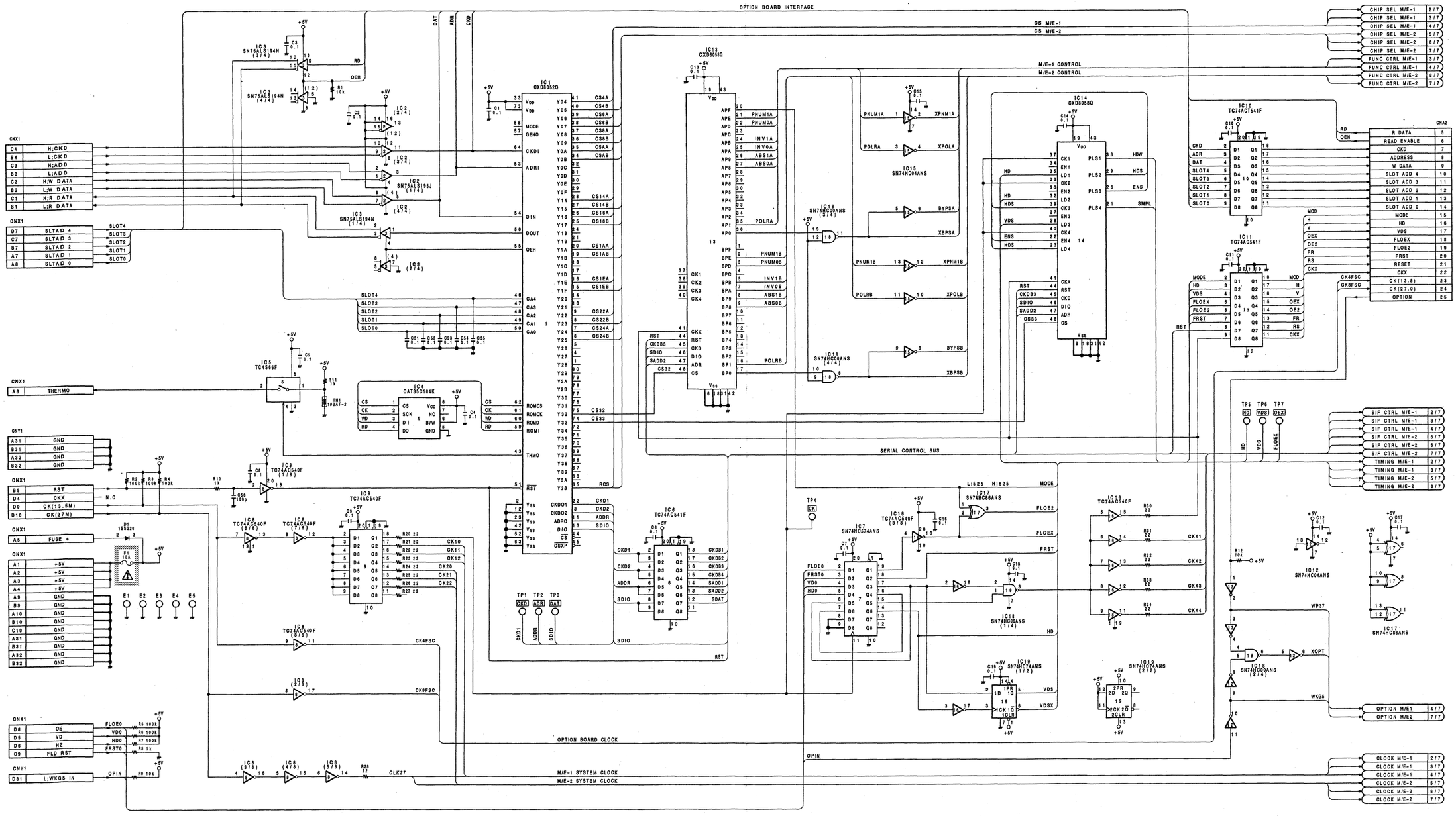

WKG-10 BOARD (1/7)

BOARD NO.1-646-025-11

DVS-6000/6000C

WKG-10(2/7);WIPE GENERATOR BOARD

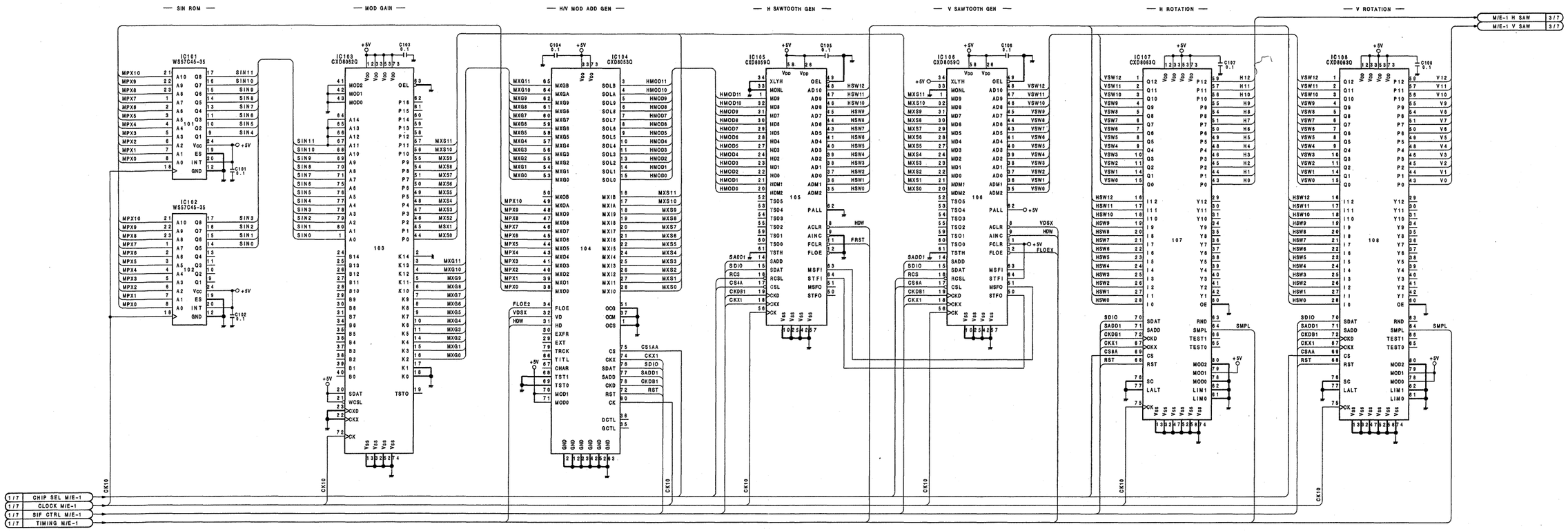

WKG-10 BOARD (2/7)

BOARD NO.1-646-025-11
DVS-6000/6000C

WKG-10(3/7);WIPE GENERATOR BOARD

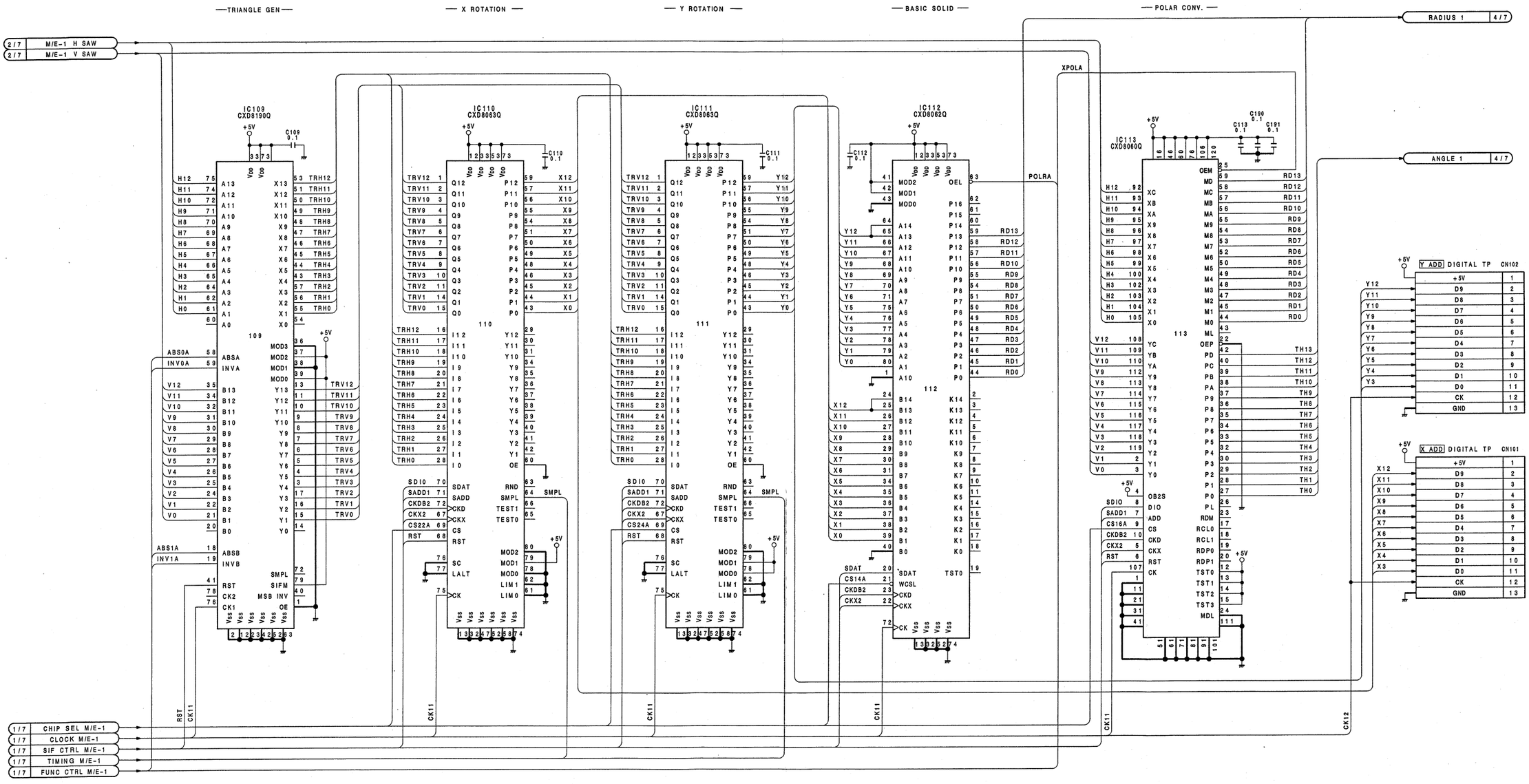

WKG-10 BOARD (3 / 7)
BOARD NO.1-646-025-11
DVS-6000/6000C

WKG-10(4/7);WIPE GENERATOR BOARD

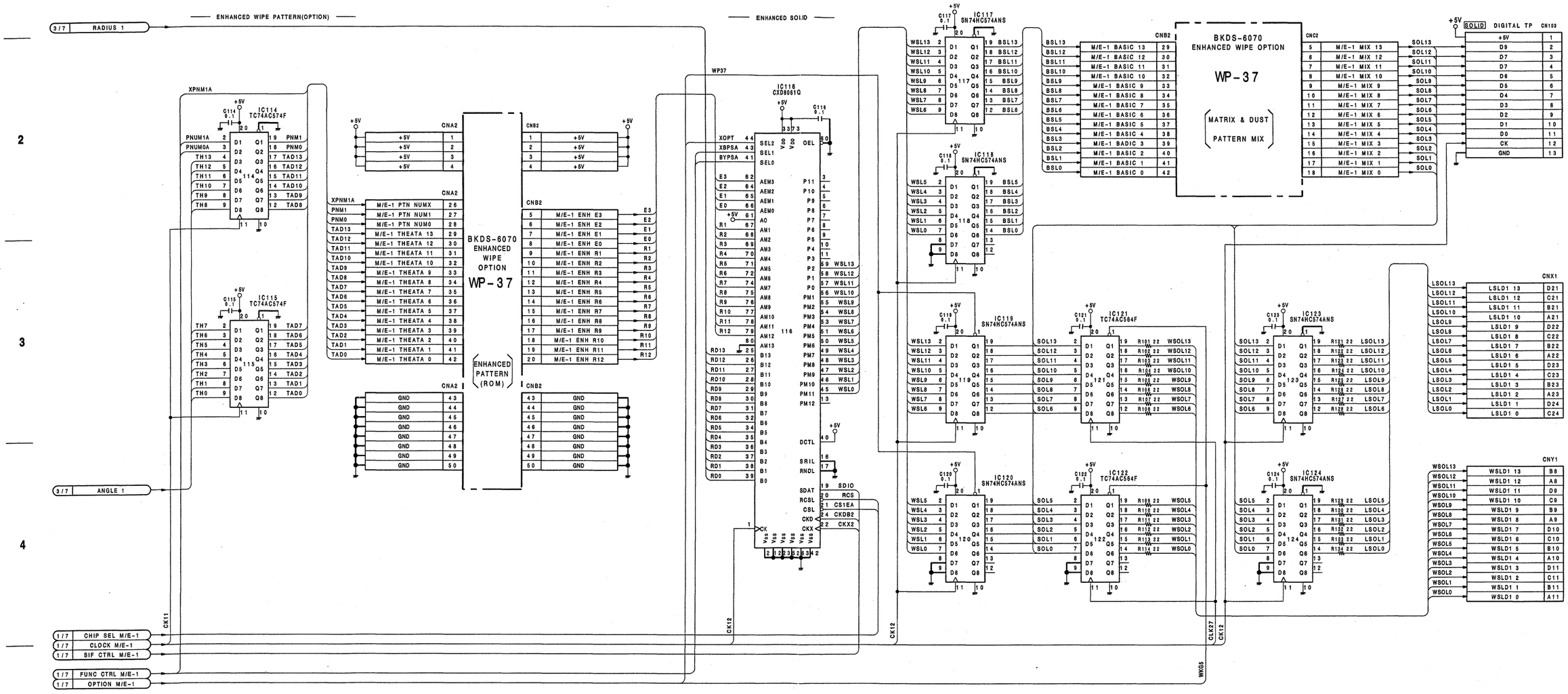

WKG-10 BOARD (4/7)

BOARD NO.1-646-025-11
DVS-6000/6000C

WKG-10(5/7);WIPE GENERATOR BOARD

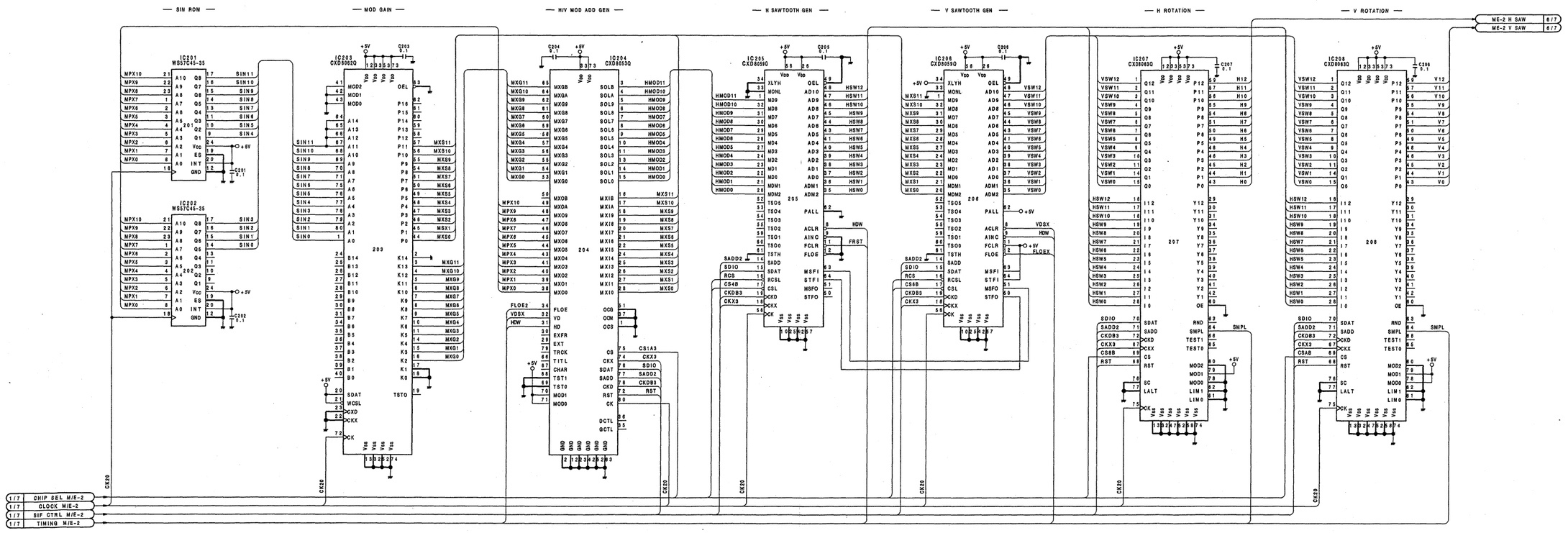

WKG-10 BOARD (5/7)

BOARD NO.1-646-025-11
DVS-6000/6000C

WKG-10(6/7);WIPE GENERATOR BOARD

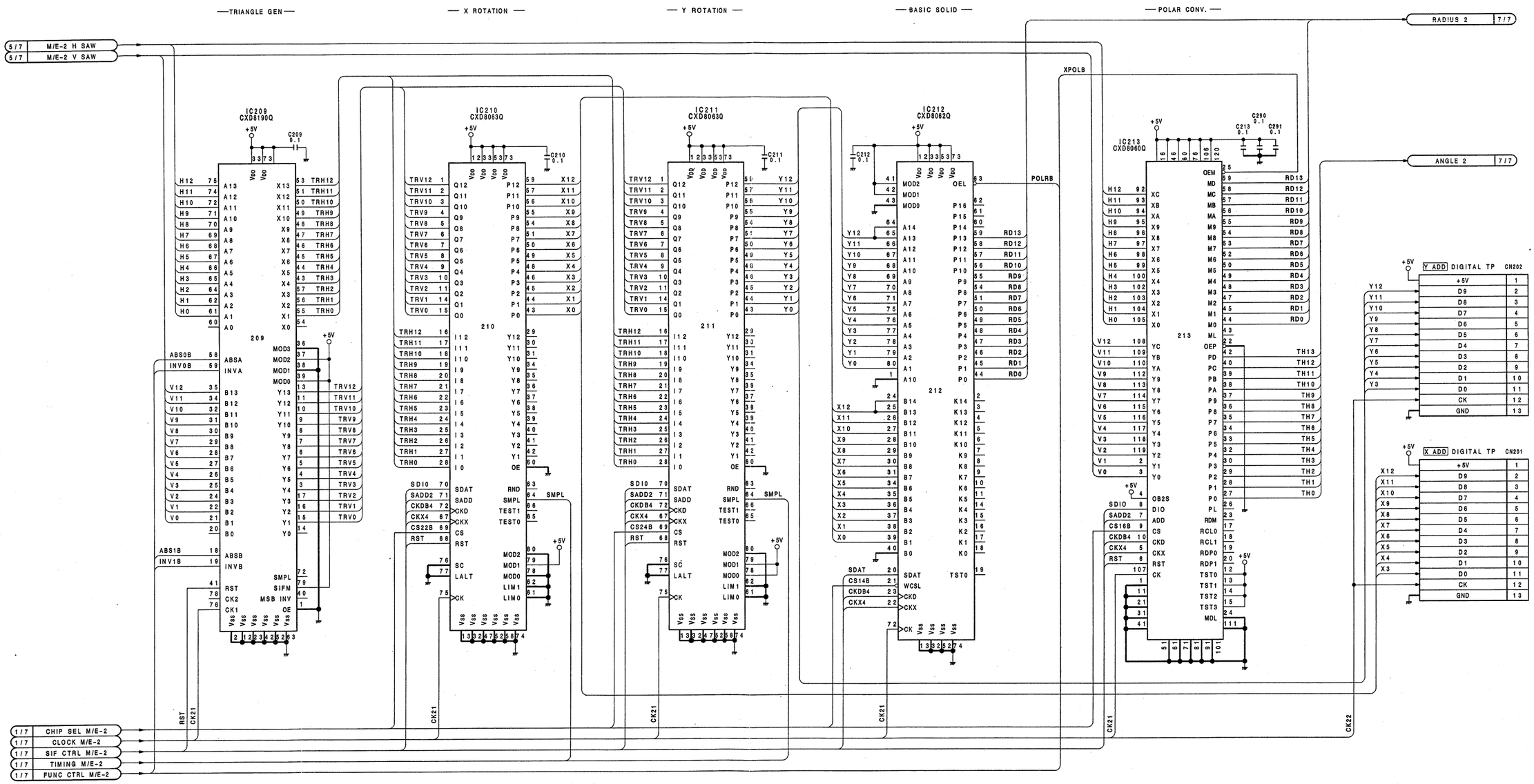

WKG-10 BOARD (6 / 7)

BOARD NO.1-646-025-11
DVS-6000/6000C

WKG-10(7/7);WIPE GENERATOR BOARD

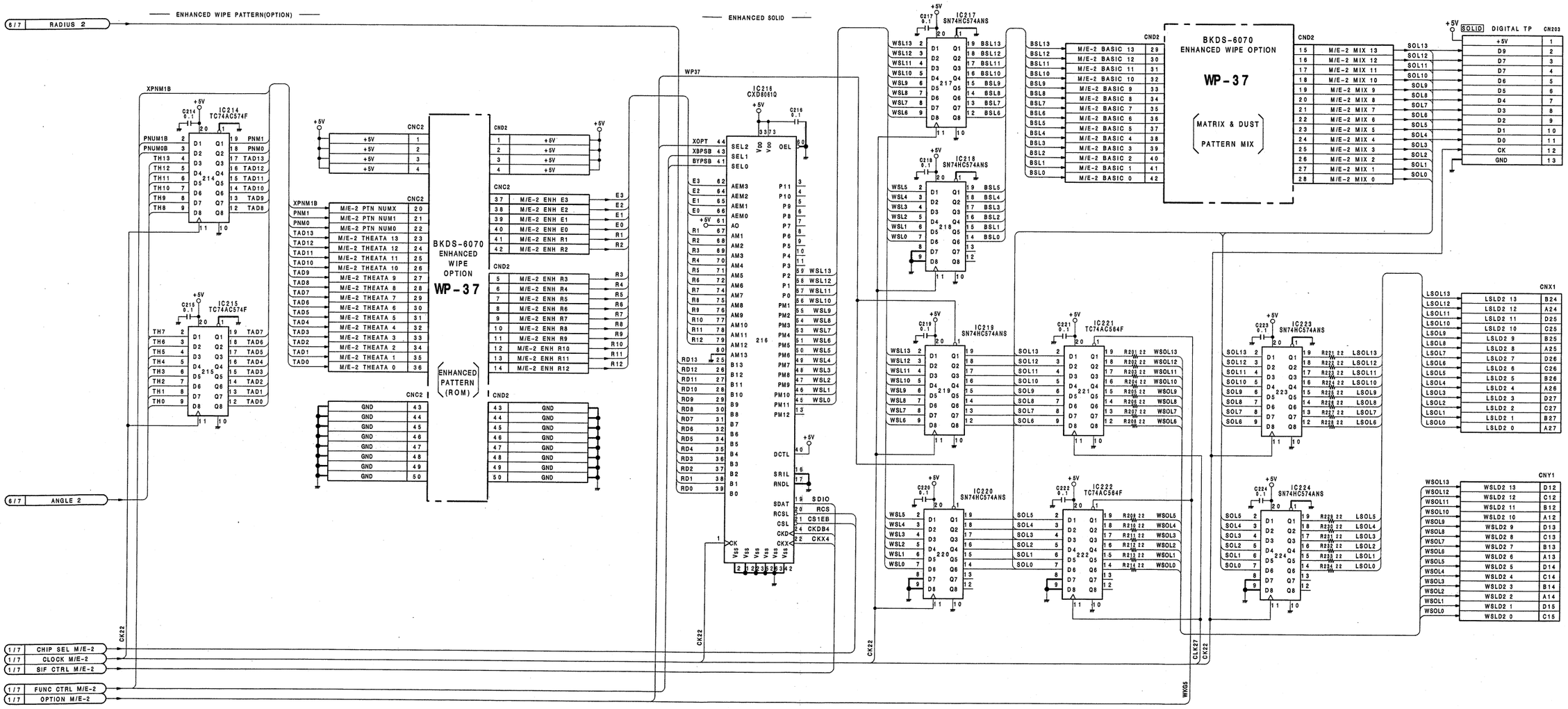

WKG-10 BOARD (7/7)

BOARD NO.1-646-025-11
DVS-6000/6000C

WP-37(1/5)(BKDS-6070);ENHANCED WIPE GENERATOR BOARD

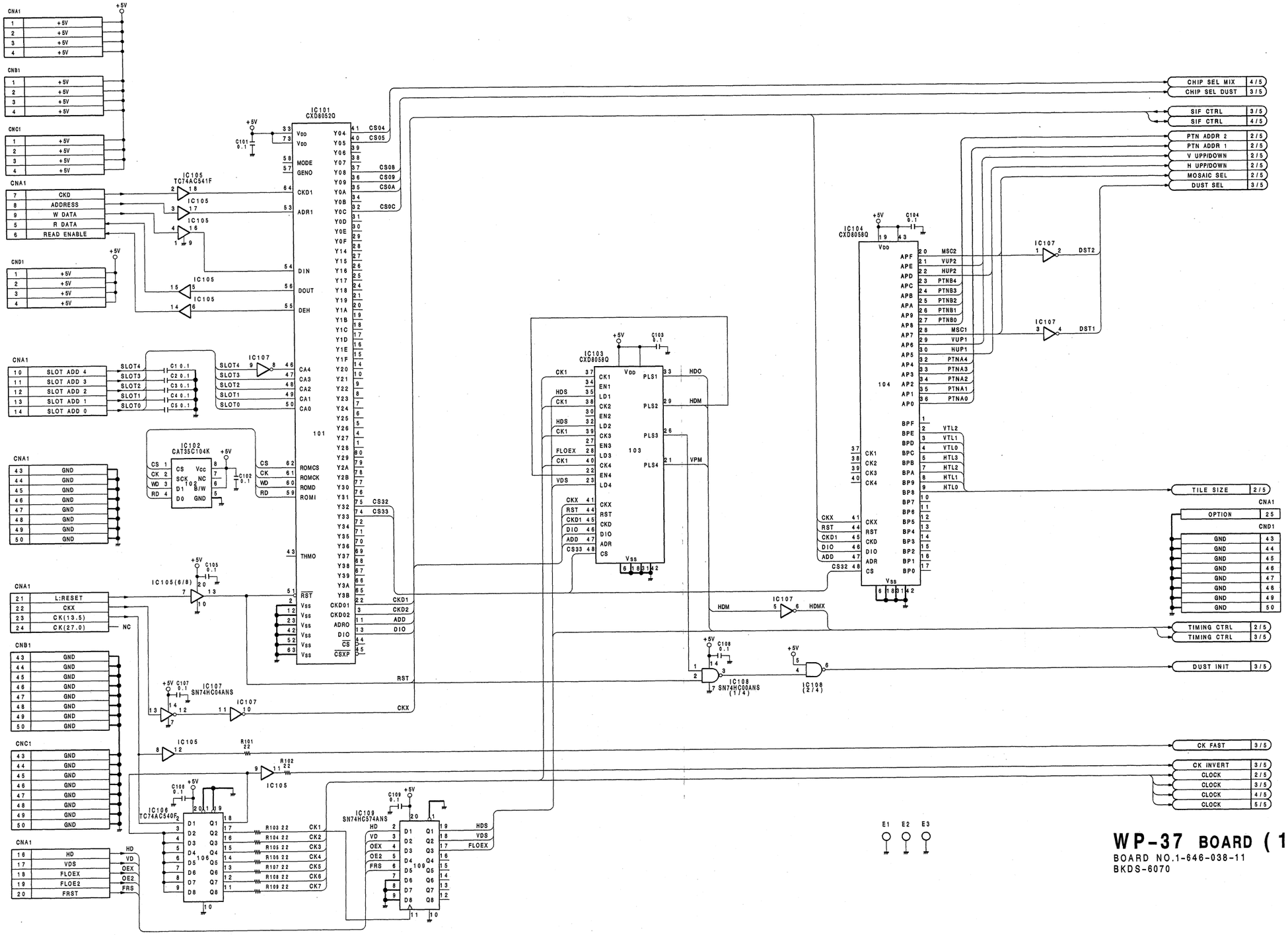

WP-37 BOARD (1/5)

BOARD NO.1-646-038-11
BKDS-6070

3-39

WP-37(2/5)(BKDS-6070);ENHANCED WIPE GENERATOR BOARD

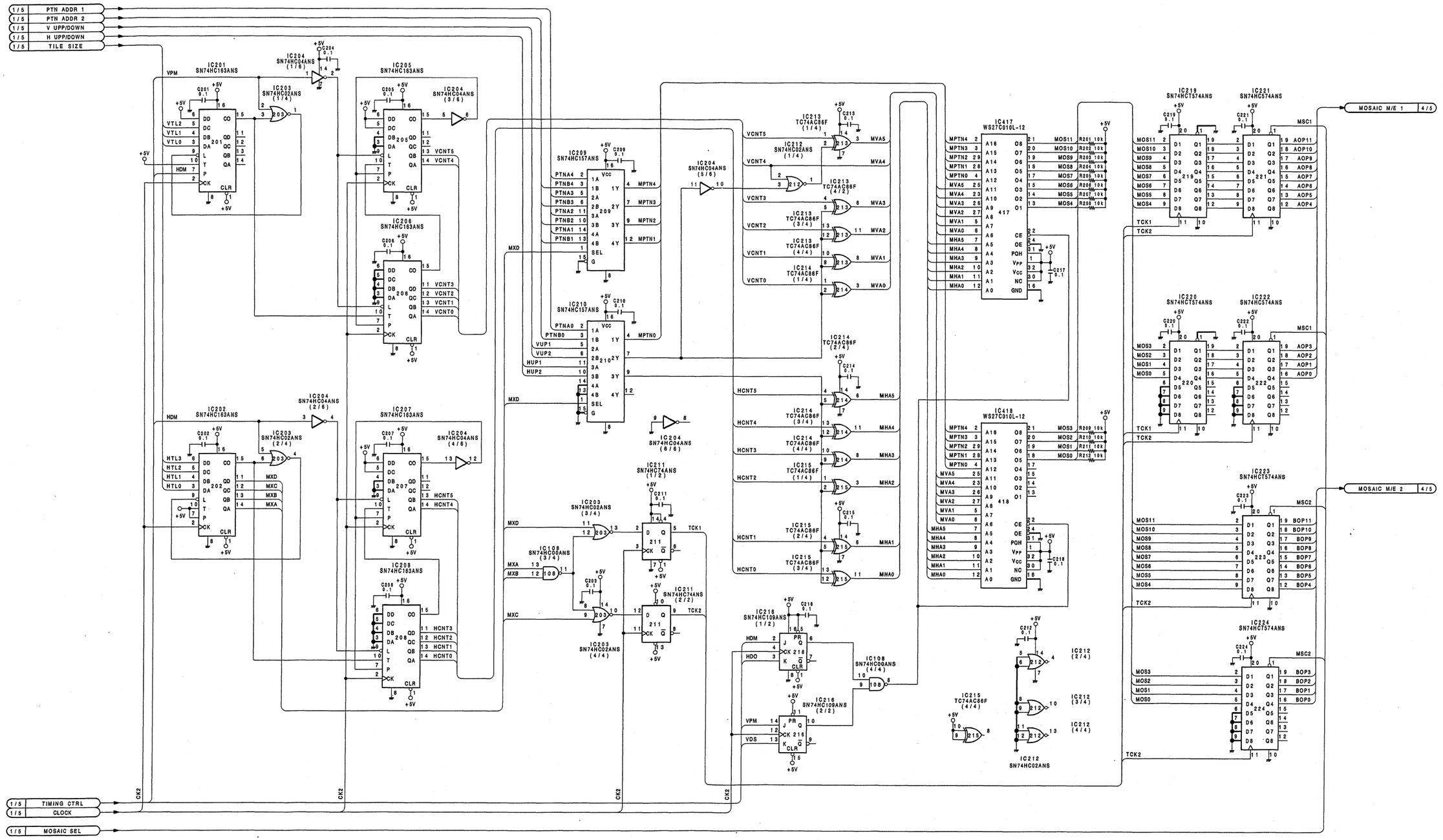

WP-37 BOARD (2/5)

BOARD NO.1-646-038-11
BKDS-6070

WP-37(3/5)(BKDS-6070);ENHANCED WIPE GENERATOR BOARD

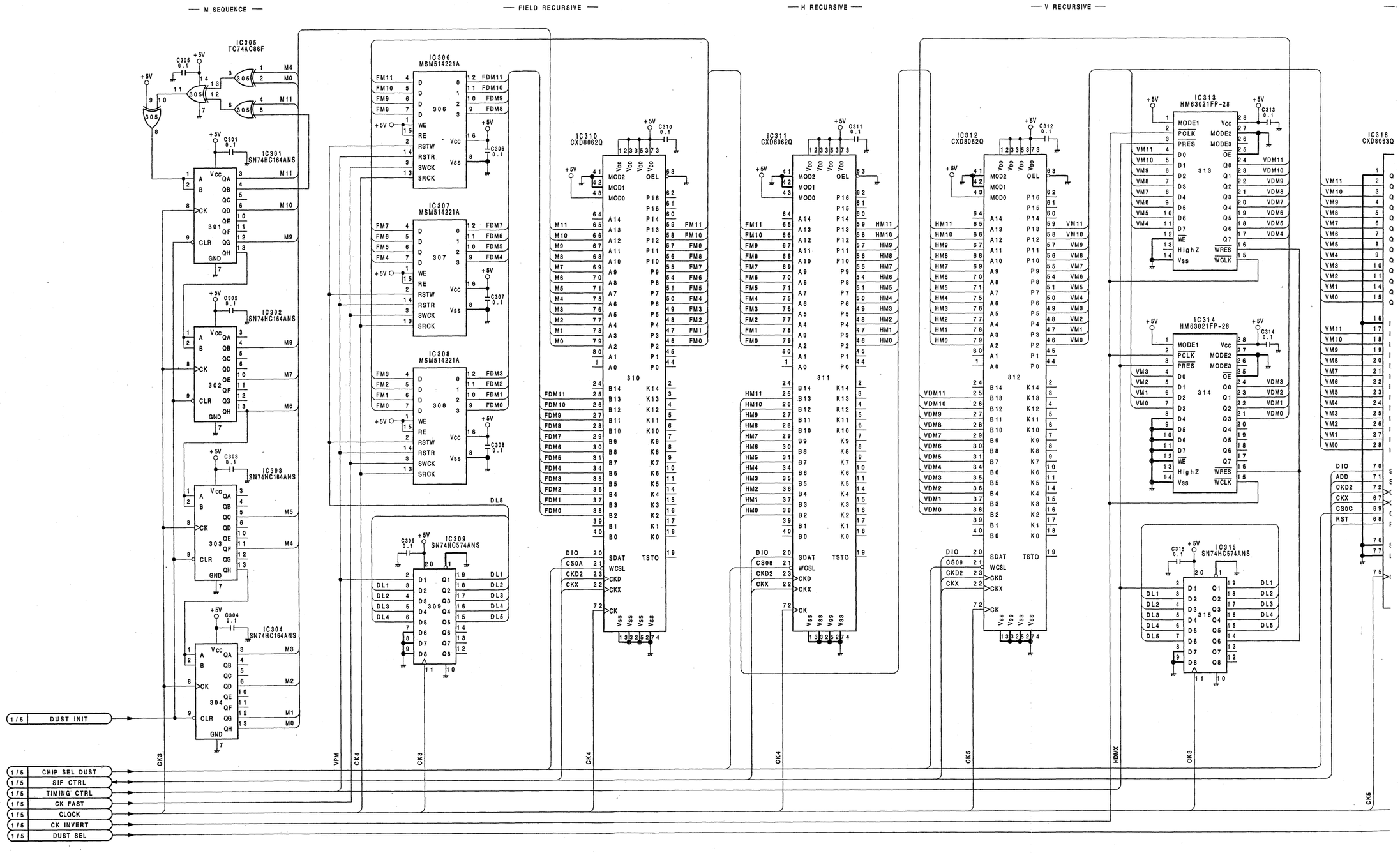

LD R URSIVE

H RECURSIVE

V RECURSIVE

GAIN CONTROL

IC310 CXD8062Q

IC311 CXD8062Q

IC312 CXD8062Q

IC313 HM63021FP-28

IC314 HM63021FP-28

IC315 SN74HCT574ANS

IC316 CXD8063Q

IC317 SN74HCT574ANS DST1

IC318 SN74HCT574ANS DST1

IC319 SN74HCT574ANS DST2

IC320 SN74HCT574ANS DST2

DUST M/E 1 4/5

DUST M/E 2 4/5

CK4

CK4

CK5

HDMX

CK3

CK5

CK5

WP-37(4/5)(BKDS-6070);ENHANCED WIPE GENERATOR BOARD

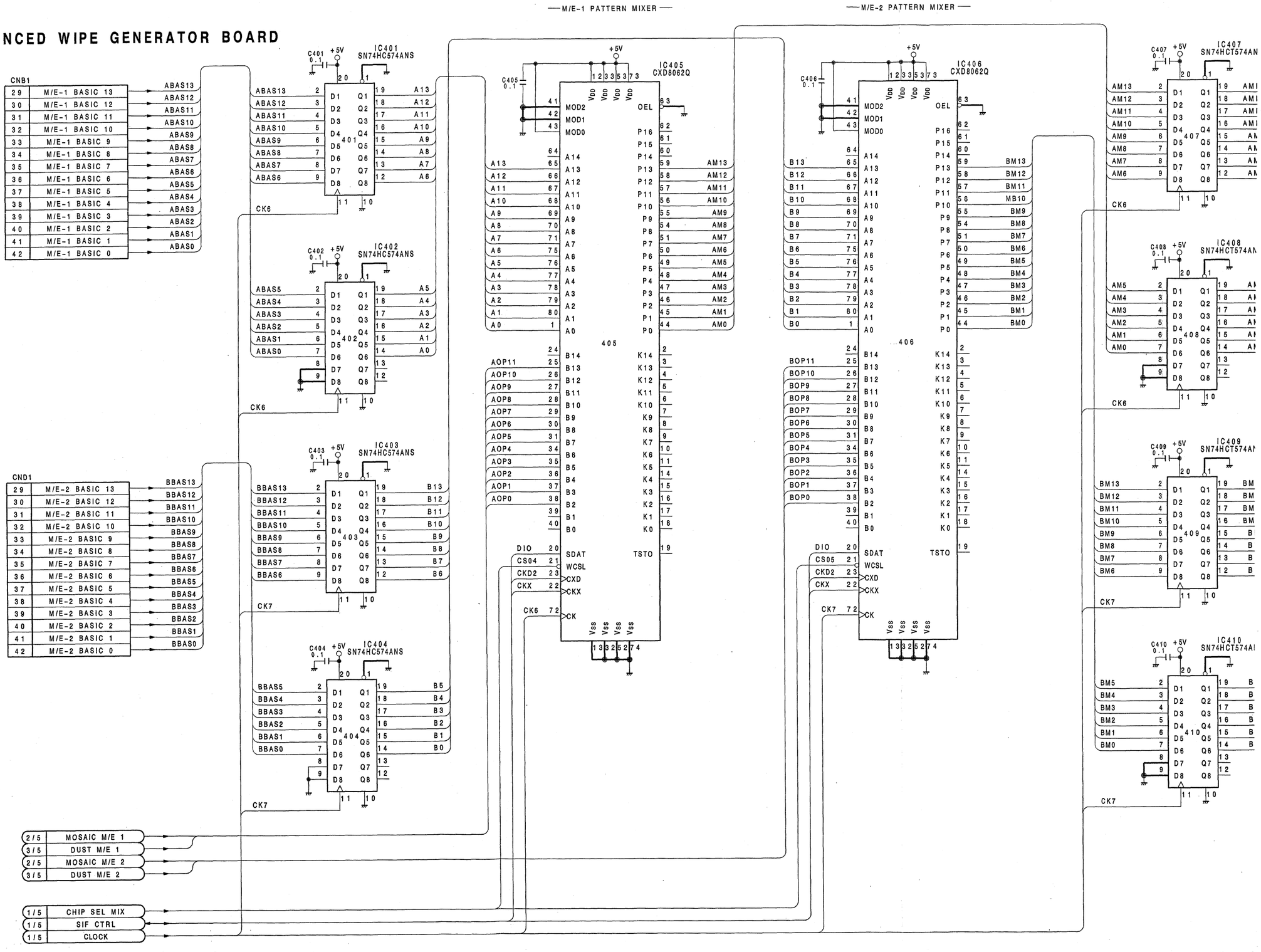

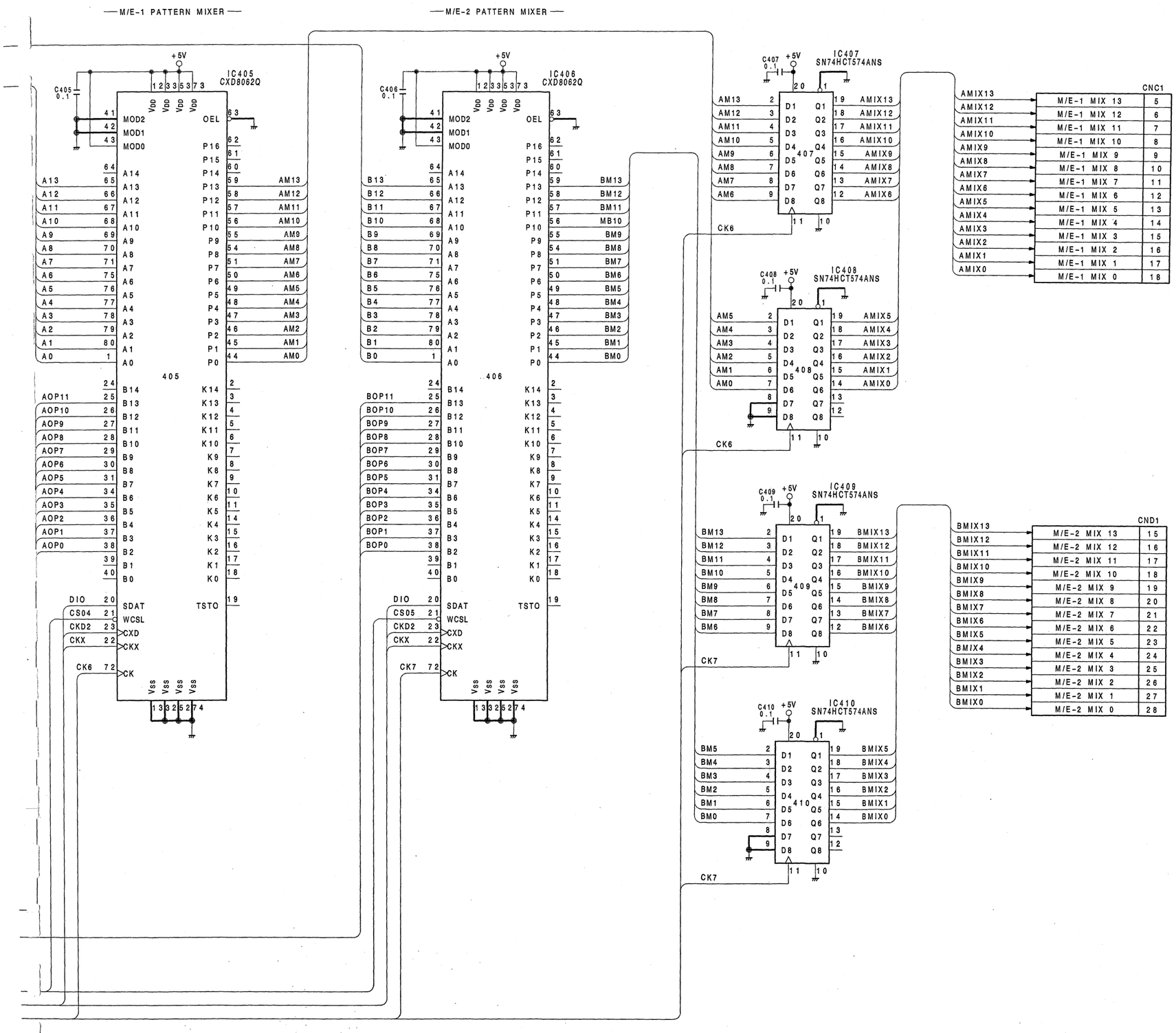

WP-37 BOARD (4 / 5)

BOARD NO.1-646-038-11
BKDS-6070

E F G H I J K L

WP-37(5/5)(BKDS-6070);ENHANCED WIPE GENERATOR BOARD

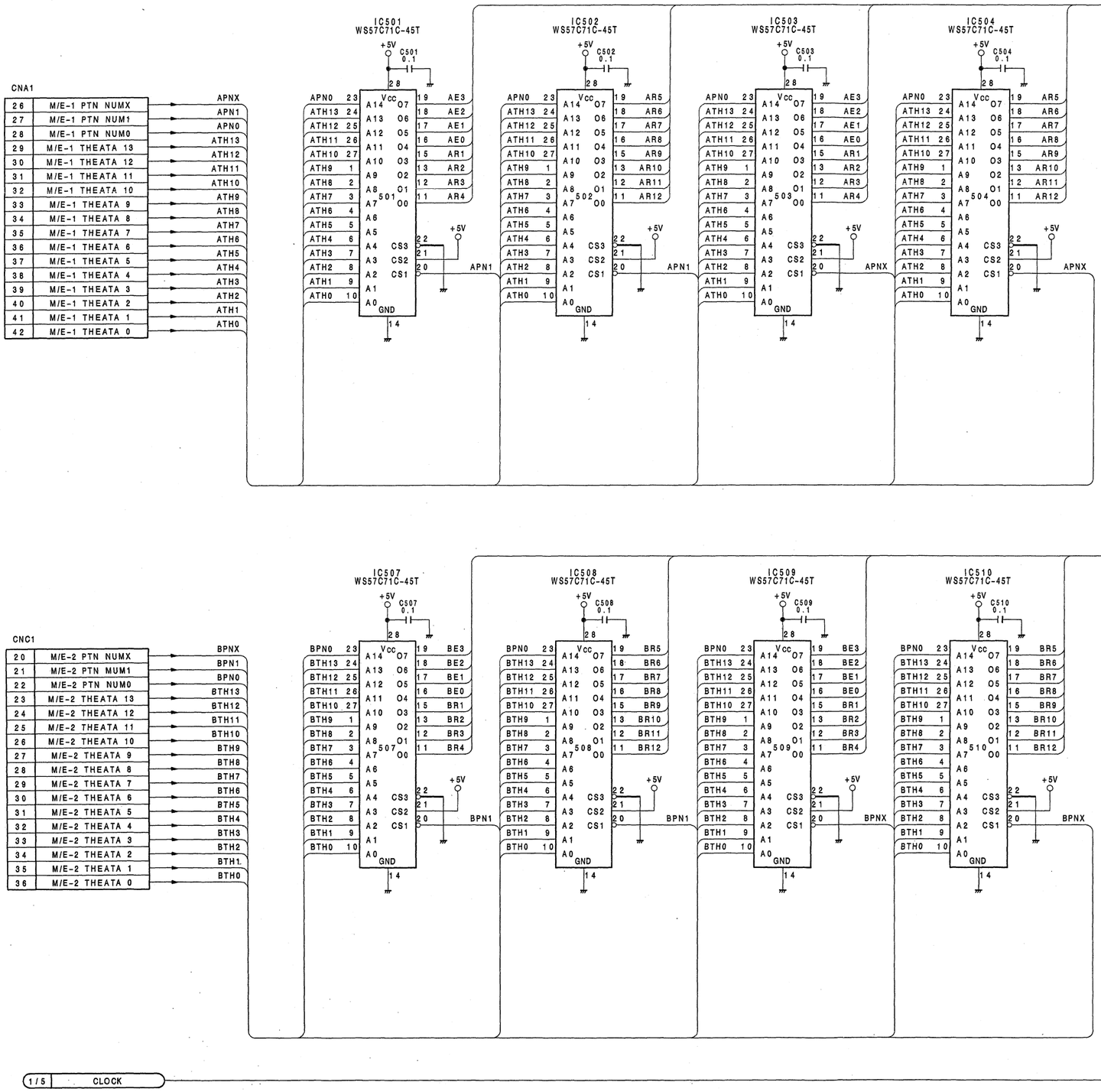

WP-37 BOARD (5/5)

BOARD NO.1-646-038-11
BKDS-6070

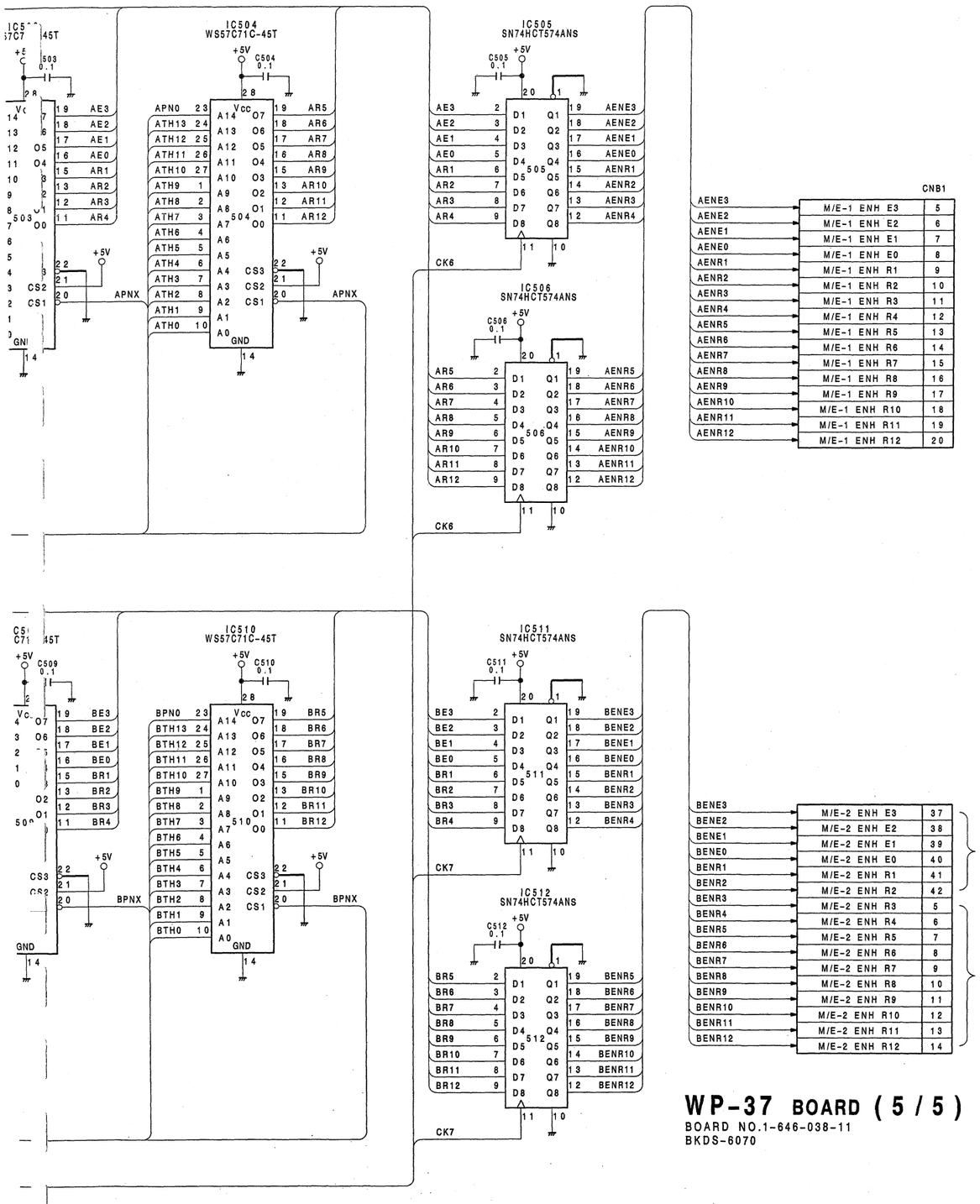

WP-37 BOARD (5 / 5)

BOARD NO.1-646-038-11
BKDS-6070

KPC-5(1/8);KEY PROCESSOR BOARD

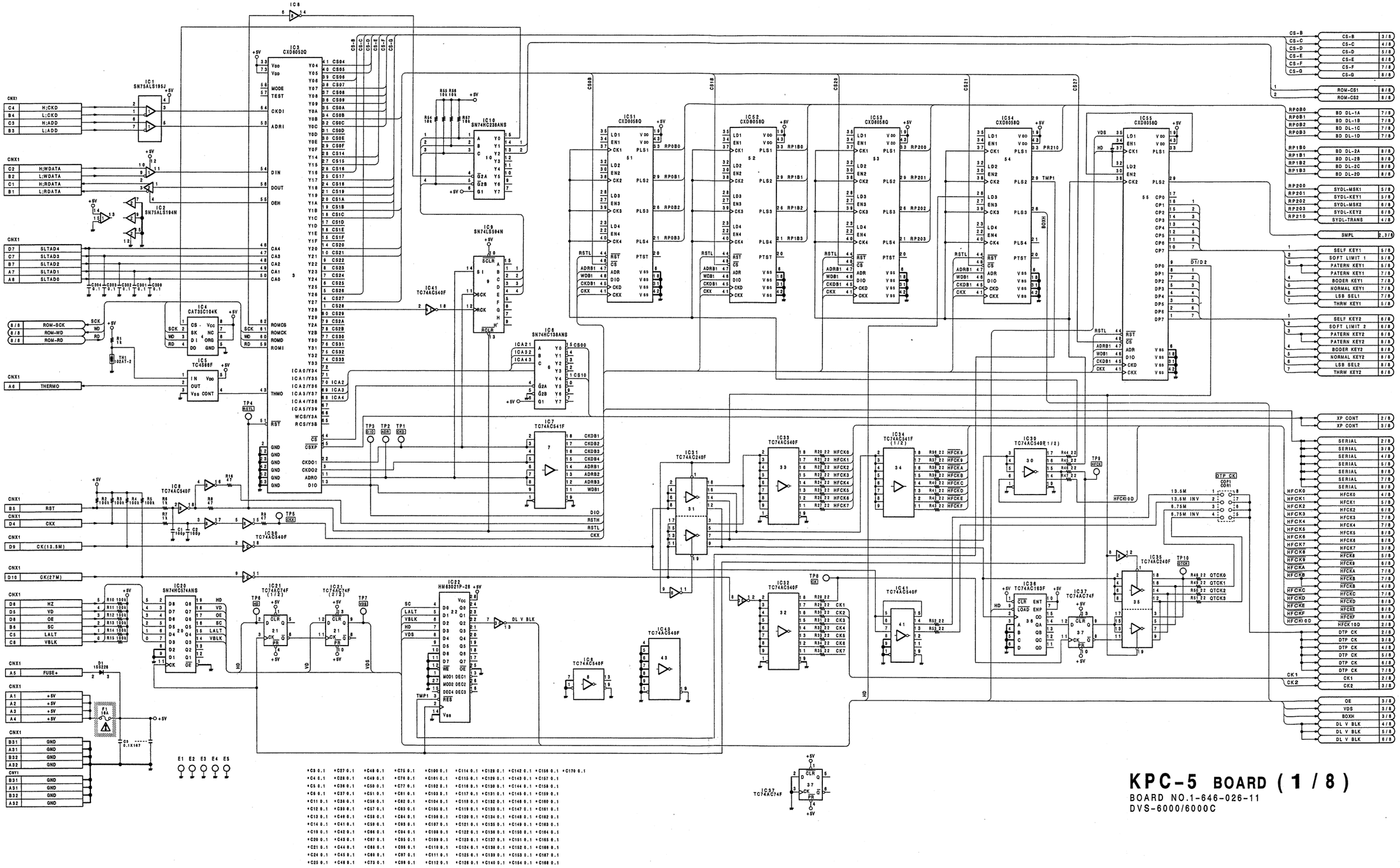

*C3 0.1 *C37 0.1 *C48 0.1 *C75 0.1 *C100 0.1 *C114 0.1 *C128 0.1 *C142 0.1 *C156 0.1 *C170 0.1
*C4 0.1 *C38 0.1 *C49 0.1 *C76 0.1 *C101 0.1 *C115 0.1 *C129 0.1 *C143 0.1 *C157 0.1
*C5 0.1 *C36 0.1 *C50 0.1 *C77 0.1 *C102 0.1 *C116 0.1 *C130 0.1 *C144 0.1 *C158 0.1
*C6 0.1 *C37 0.1 *C51 0.1 *C81 0.1 *C103 0.1 *C117 0.1 *C131 0.1 *C145 0.1 *C159 0.1
*C11 0.1 *C38 0.1 *C58 0.1 *C82 0.1 *C104 0.1 *C118 0.1 *C132 0.1 *C146 0.1 *C160 0.1
*C12 0.1 *C39 0.1 *C83 0.1 *C105 0.1 *C119 0.1 *C133 0.1 *C147 0.1 *C161 0.1
*C13 0.1 *C40 0.1 *C58 0.1 *C84 0.1 *C106 0.1 *C120 0.1 *C134 0.1 *C148 0.1 *C162 0.1
*C14 0.1 *C41 0.1 *C59 0.1 *C93 0.1 *C107 0.1 *C121 0.1 *C135 0.1 *C149 0.1 *C163 0.1
*C19 0.1 *C42 0.1 *C66 0.1 *C94 0.1 *C108 0.1 *C122 0.1 *C136 0.1 *C150 0.1 *C164 0.1
*C20 0.1 *C43 0.1 *C67 0.1 *C95 0.1 *C109 0.1 *C123 0.1 *C137 0.1 *C151 0.1 *C165 0.1
*C21 0.1 *C44 0.1 *C68 0.1 *C96 0.1 *C110 0.1 *C124 0.1 *C138 0.1 *C152 0.1 *C166 0.1
*C24 0.1 *C45 0.1 *C69 0.1 *C97 0.1 *C111 0.1 *C125 0.1 *C139 0.1 *C153 0.1 *C167 0.1
*C25 0.1 *C46 0.1 *C73 0.1 *C98 0.1 *C112 0.1 *C126 0.1 *C140 0.1 *C154 0.1 *C168 0.1
*C26 0.1 *C47 0.1 *C74 0.1 *C99 0.1 *C113 0.1 *C127 0.1 *C141 0.1 *C155 0.1 *C169 0.1

KPC-5 BOARD (1/8)

BOARD NO.1-646-026-11
DVS-6000/6000C

KPC-5(2/8);KEY PROCESSOR BOARD

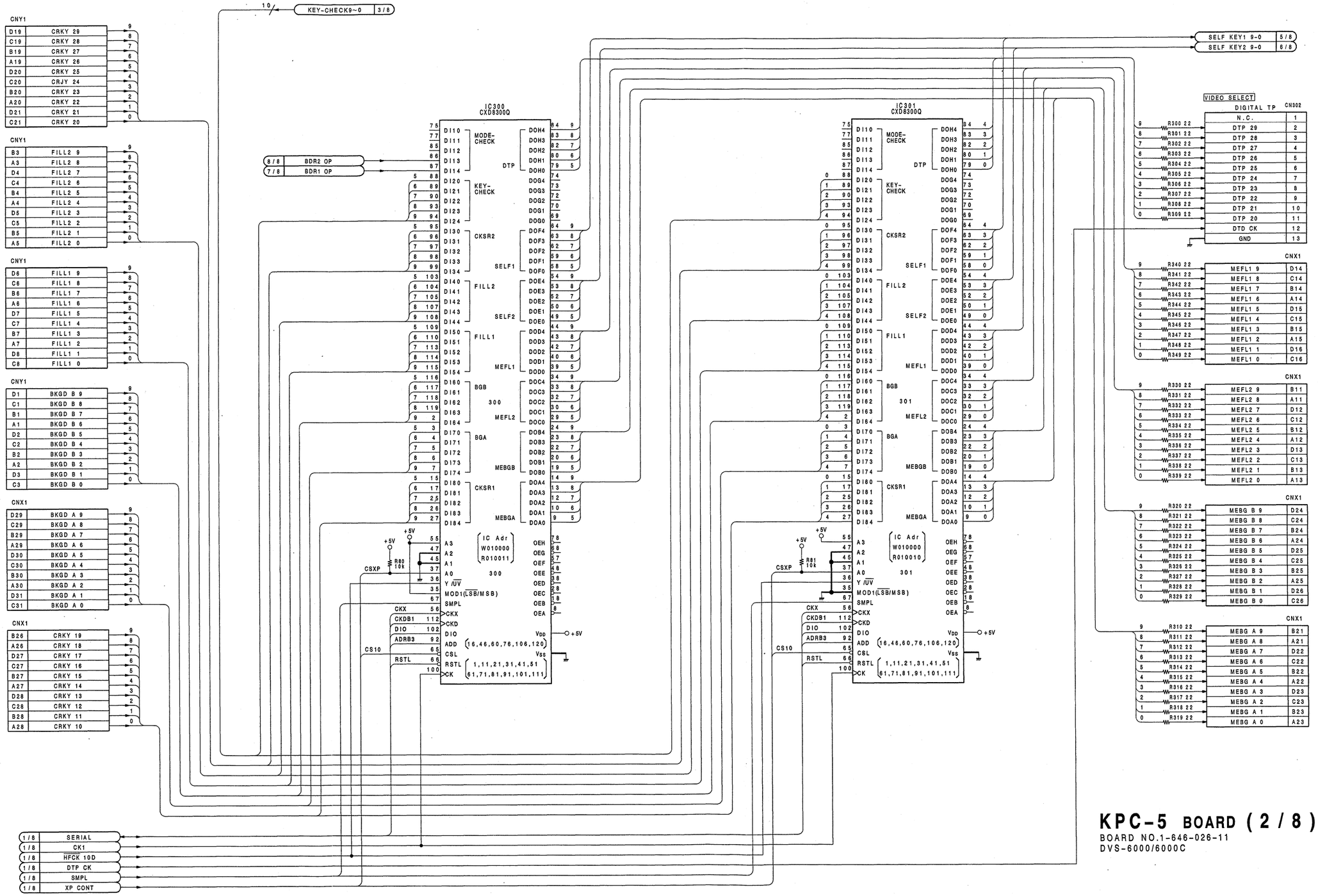

KPC-5 BOARD (2/8)

BOARD NO.1-646-026-11
DVS-6000/6000C

KPC-5(3/8);KEY PROCESSOR BOARD

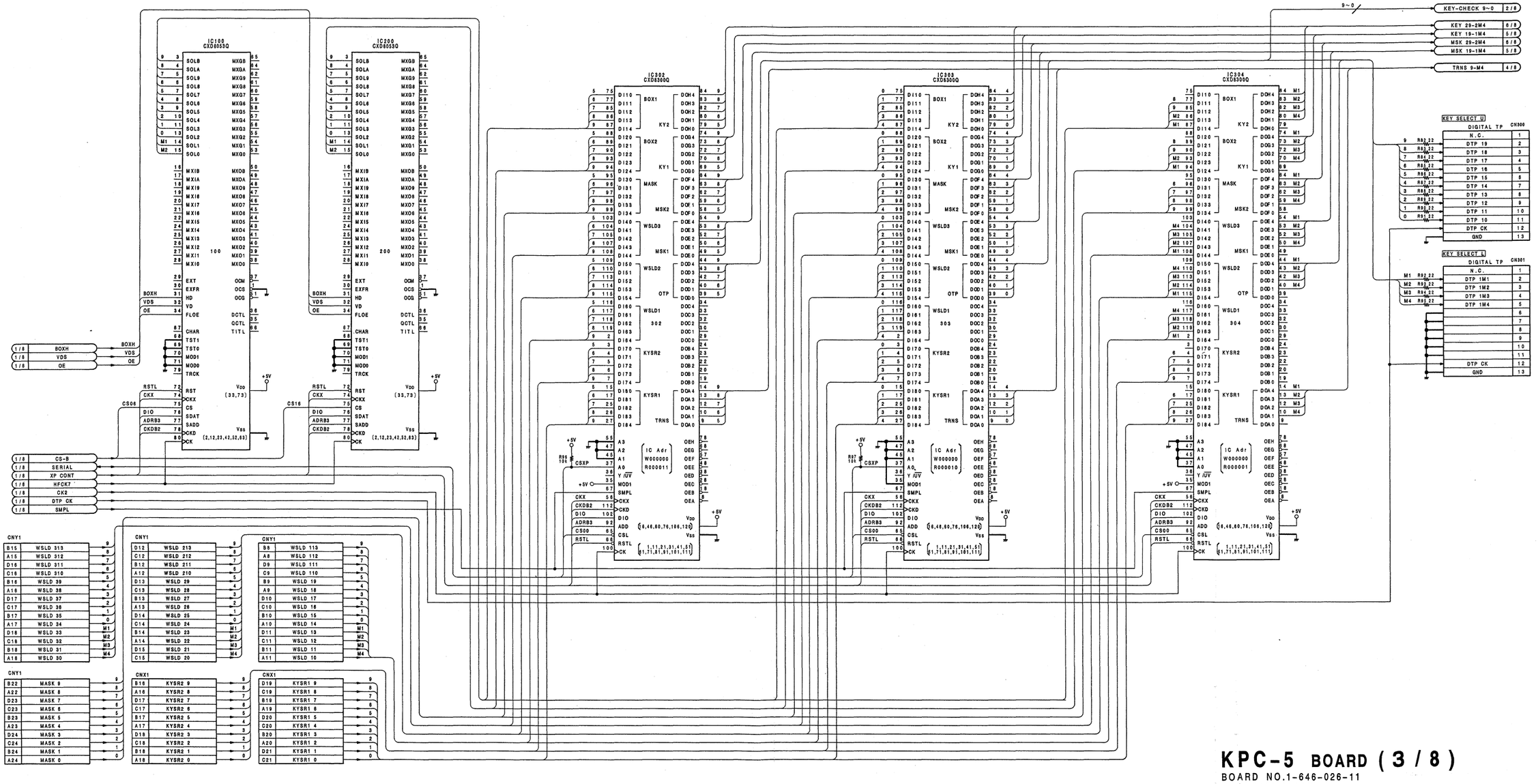

KPC-5 BOARD (3/8)

BOARD NO.1-646-026-11
DVS-6000/6000C

KPC-5(5/8);KEY PROCESSOR BOARD

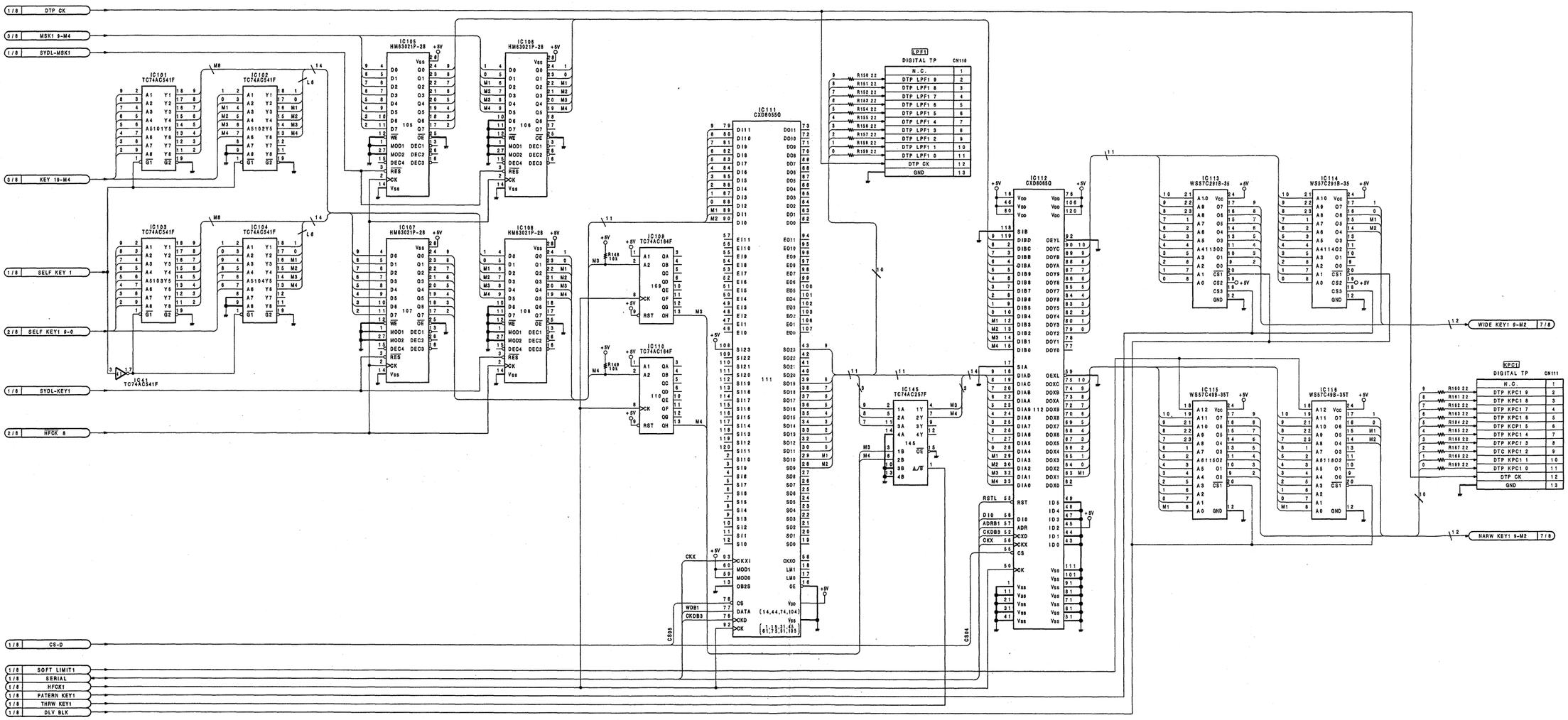

KPC-5 BOARD (5/8)

BOARD NO.1-646-026-11
DVS-6000/6000C

KPC-5(6/8);KEY PROCESSOR BOARD

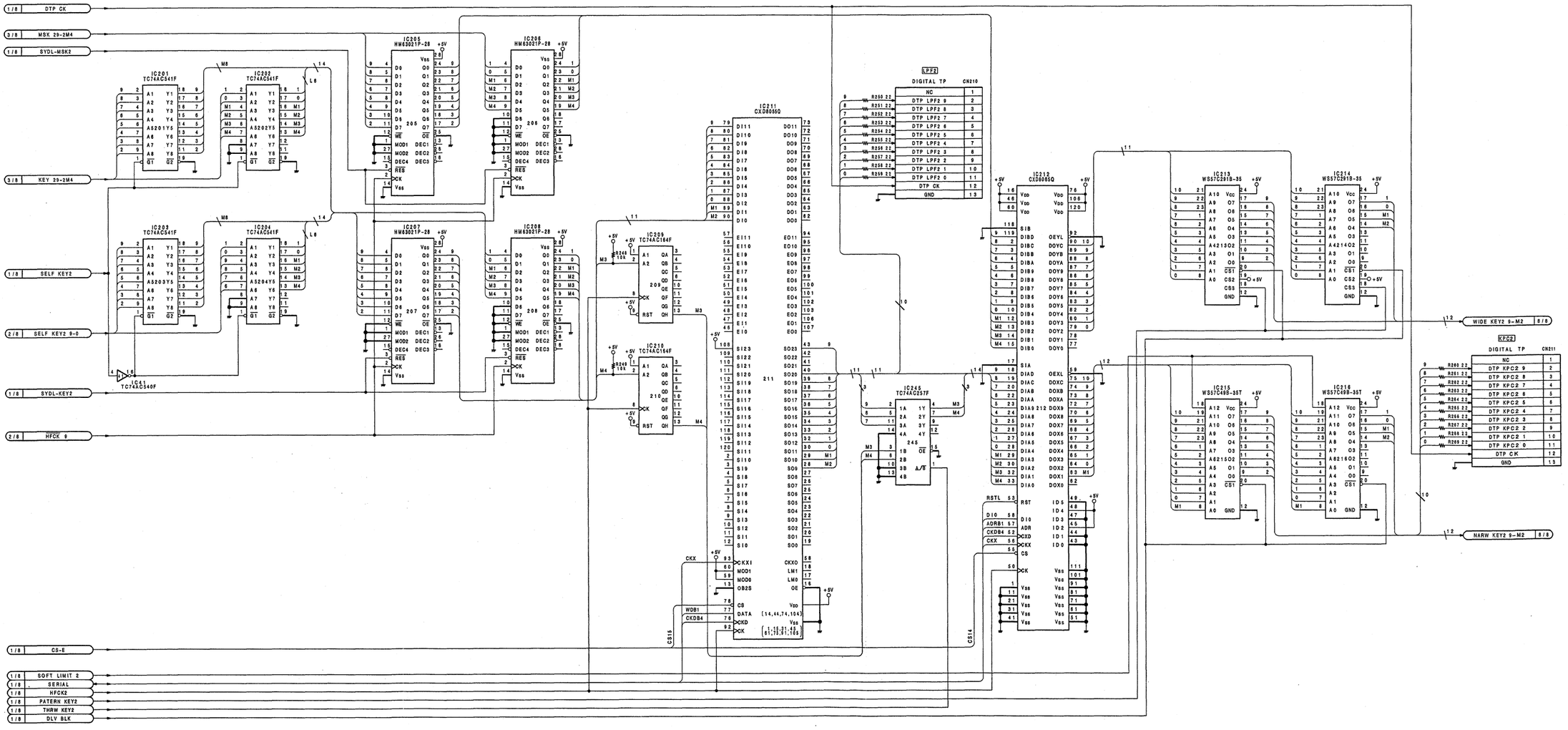

KPC-5 BOARD (6/8)

BOARD NO.1-646-026-11
DVS-6000/6000C

KPC-5(7/8);KEY PROCESSOR BOARD
BD-22(1/2)(BKDS-6071);KEY BORDER GENERATOR BOARD

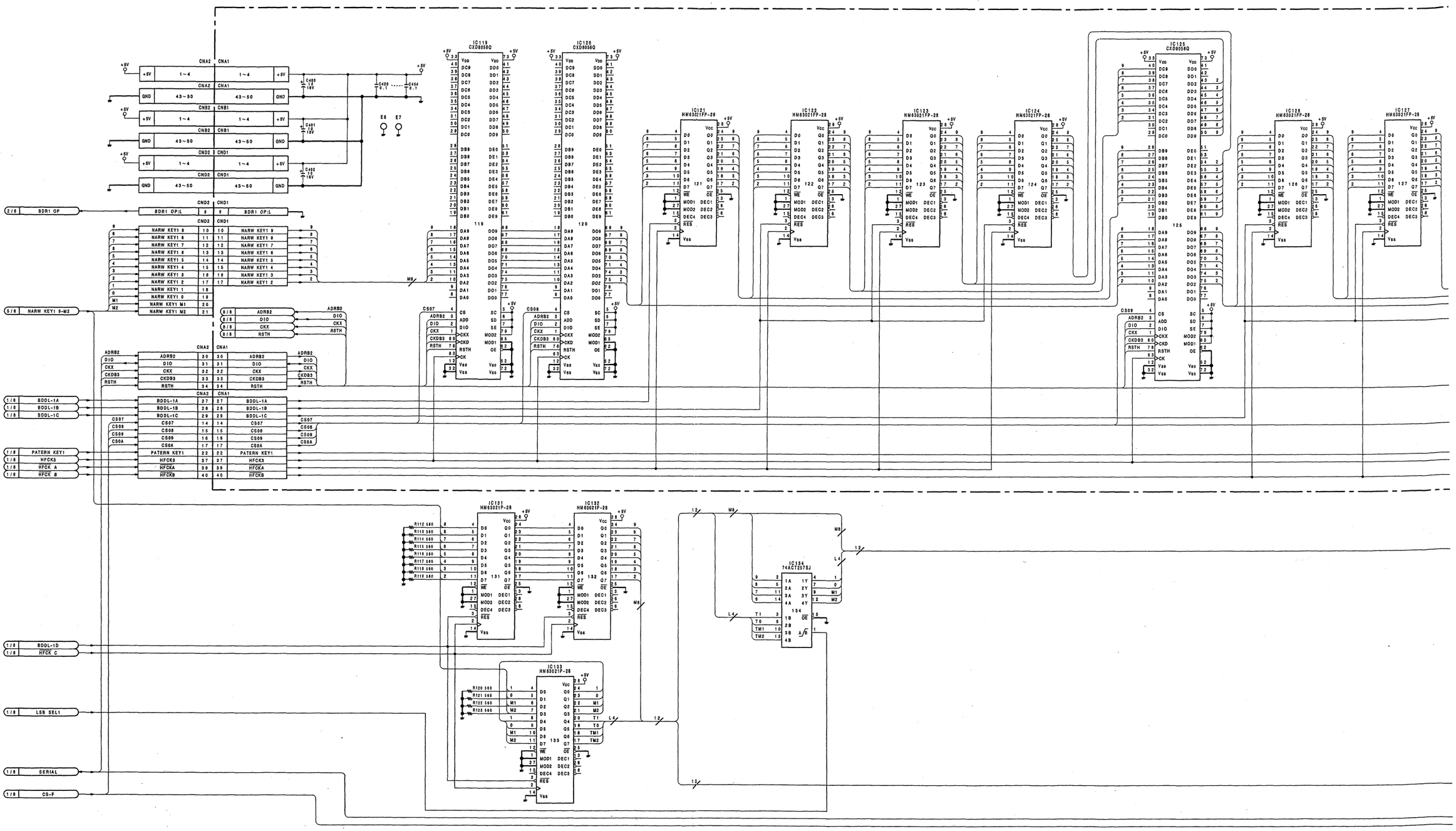

A　B　C　D　E　F　G　H

〔Option Board〕 **BD-22(1/2)**

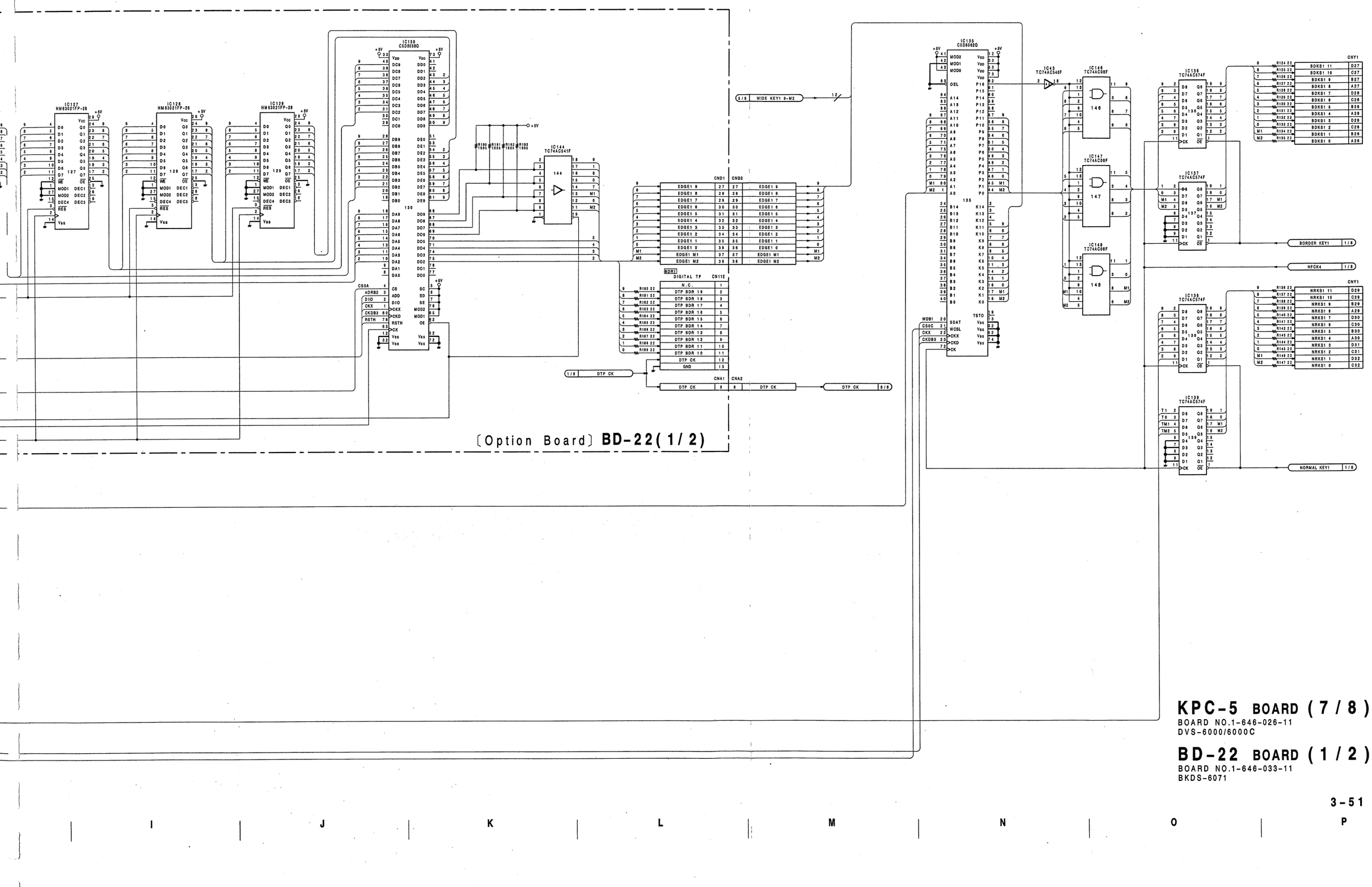

KPC-5 BOARD (7/8)

BOARD NO.1-646-026-11
DVS-6000/6000C

BD-22 BOARD (1/2)

BOARD NO.1-646-033-11
BKDS-6071

KPC-5(8/8);KEY PROCESSOR BOARD
BD-22(2/2)(BKDS-6071);KEY BORDER GENERATOR BOARD

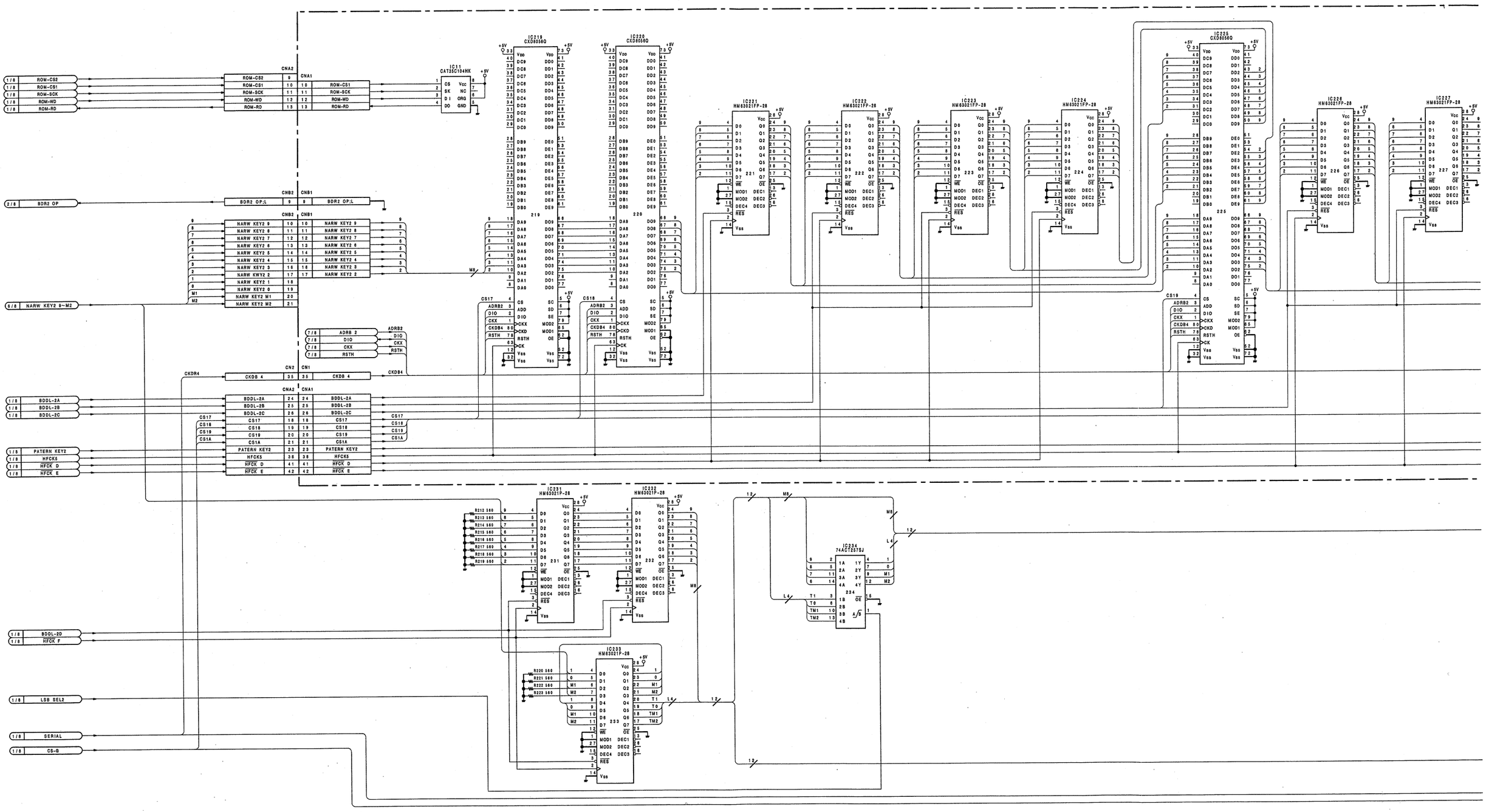

A B C D E F G H

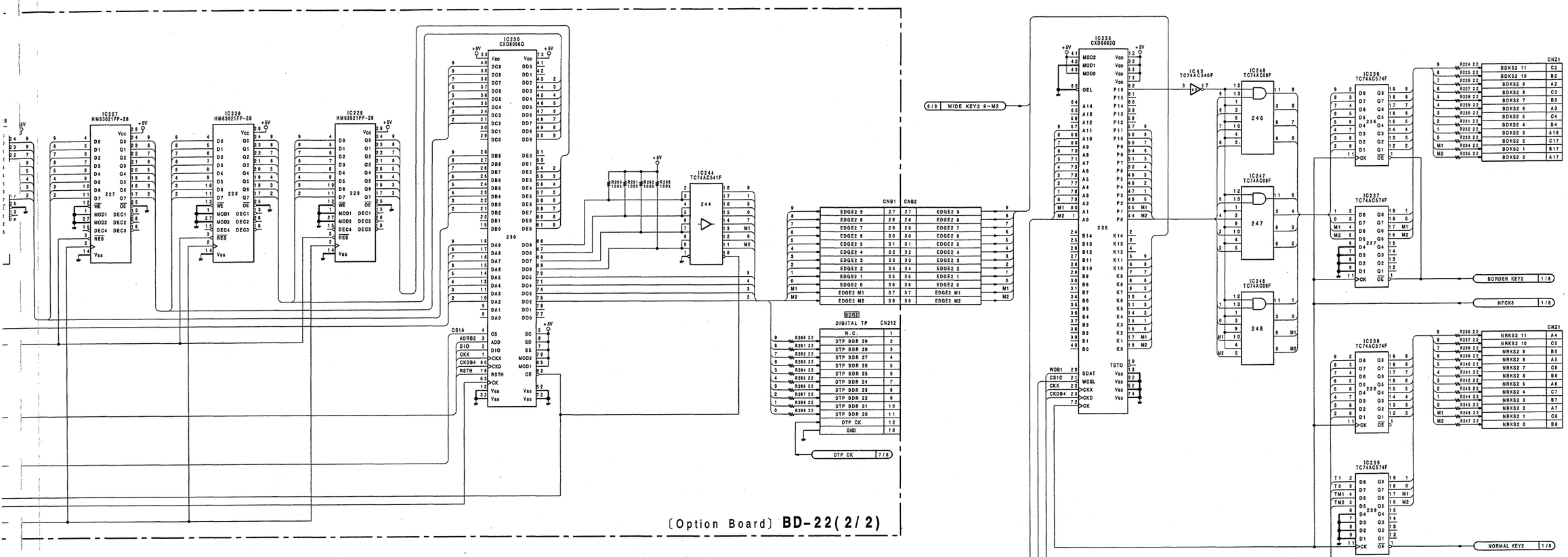

KPC-5 BOARD (8/8)

BOARD NO.1-646-026-11
DVS-6000/6000C

BD-22 BOARD (2/2)

BOARD NO.1-646-033-11
BKDS-6071

MIX-8(1/6);MIXER BOARD

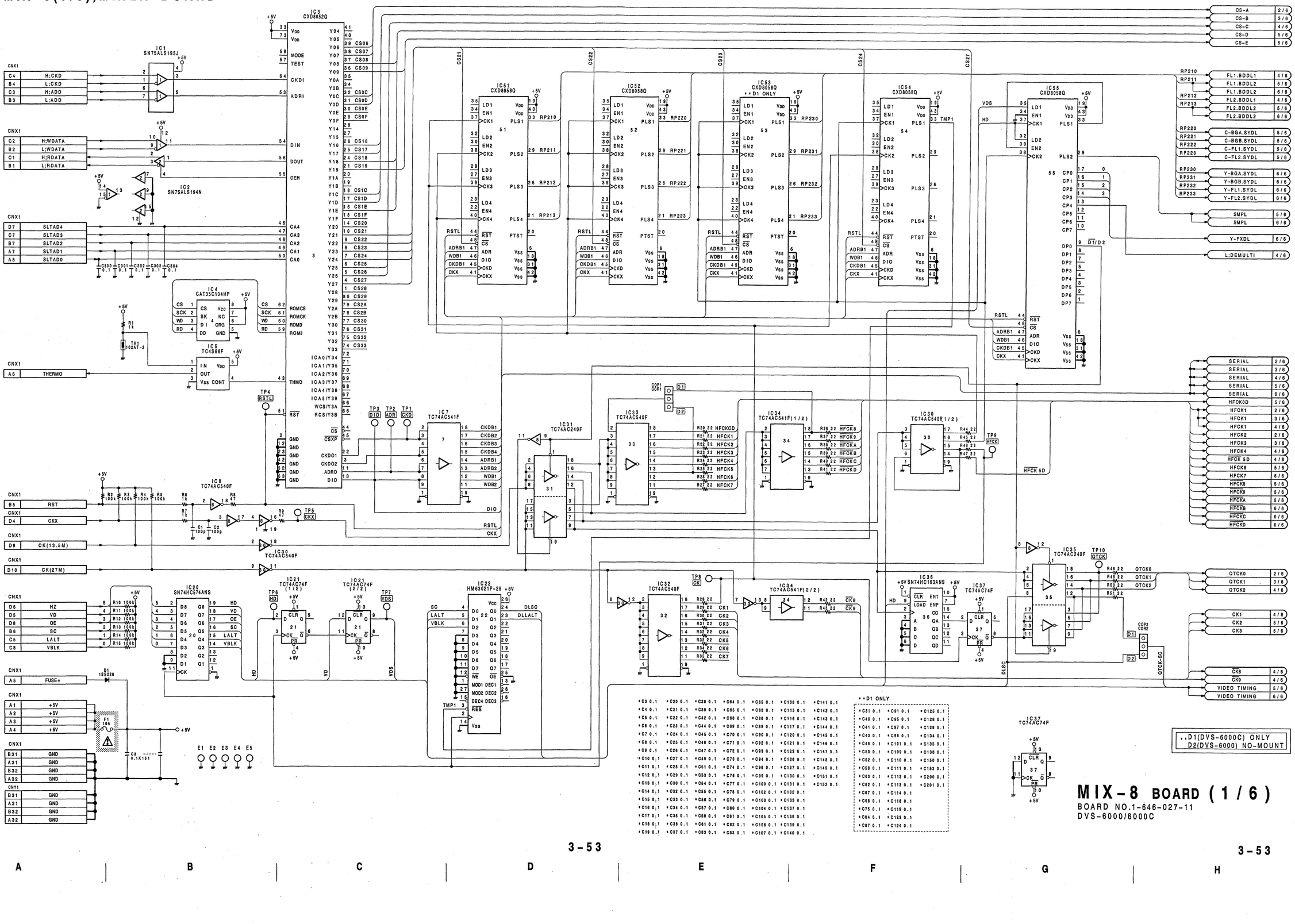

MIX-8 BOARD (1/6)

BOARD NO.1-646-027-11
DVS-6000/6000C

MIX-8(2/6);MIXER BOARD

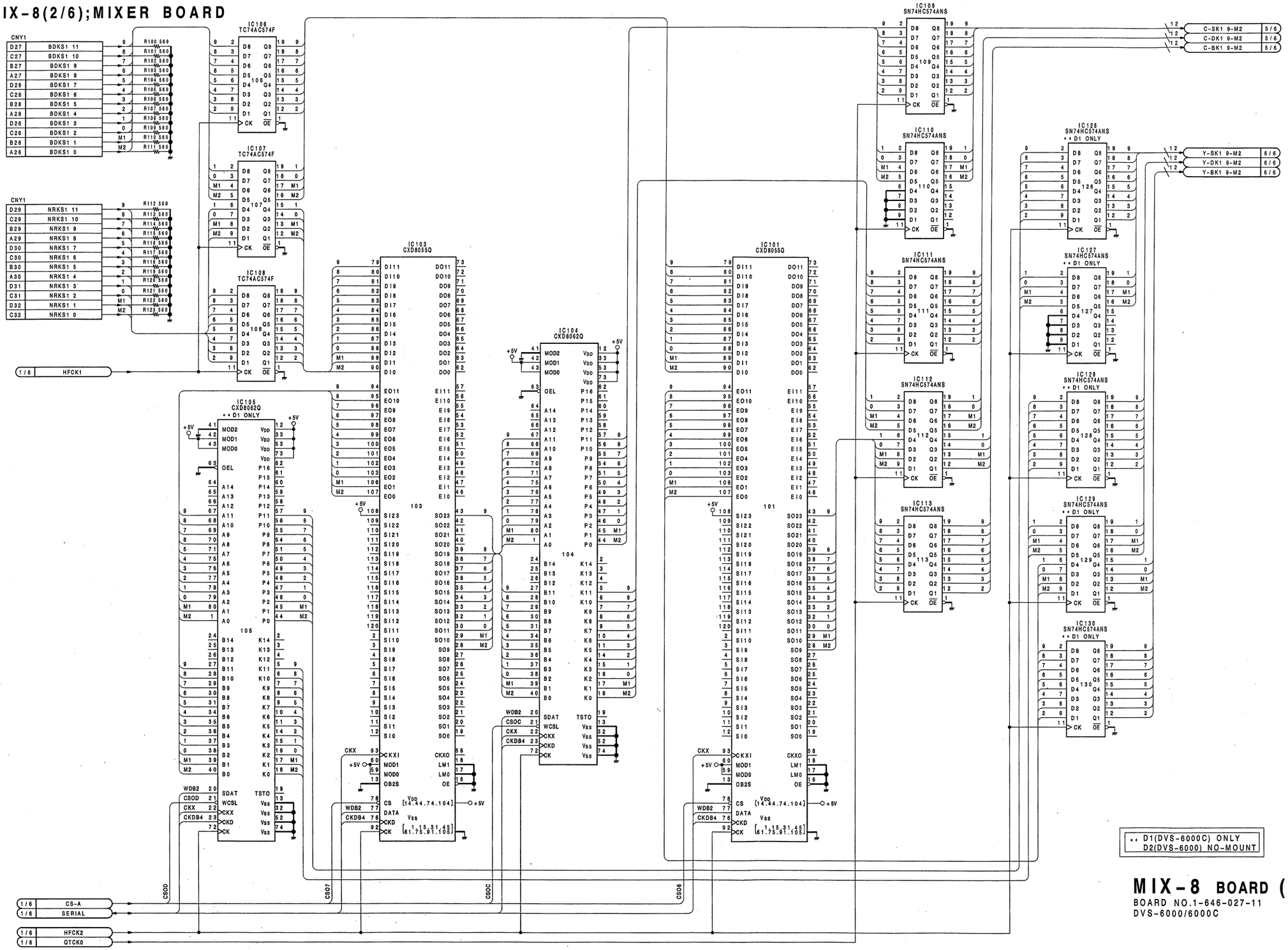

** D1(DVS-6000C) ONLY
D2(DVS-6000) NO-MOUNT

MIX-8 BOARD (2/6)

BOARD NO.1-646-027-11
DVS-6000/6000C

MIX-8(3/6);MIXER BOARD

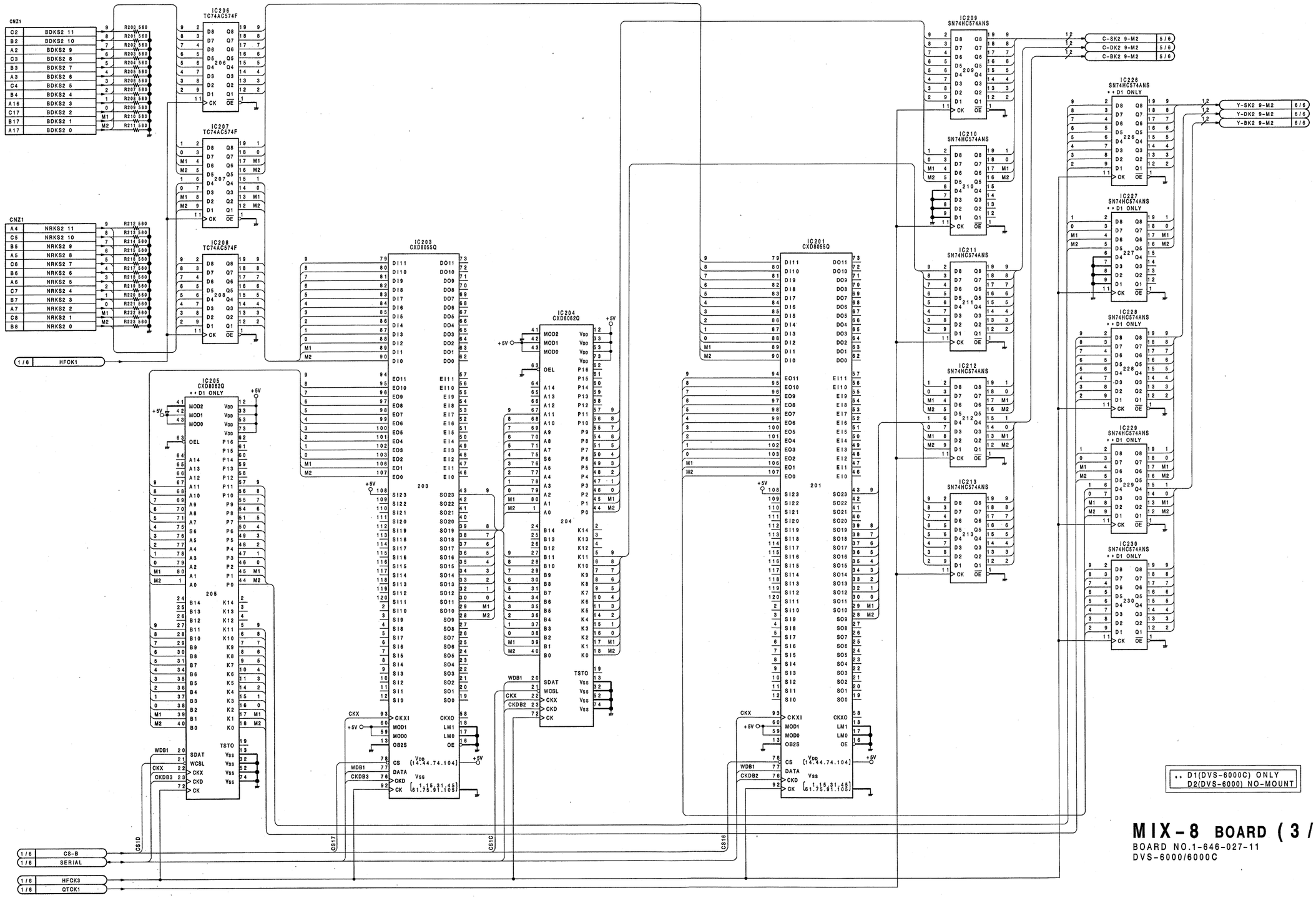

MIX-8 BOARD (3/6)

BOARD NO.1-646-027-11
DVS-6000/6000C

MIX-8(4/6);MIXER BOARD

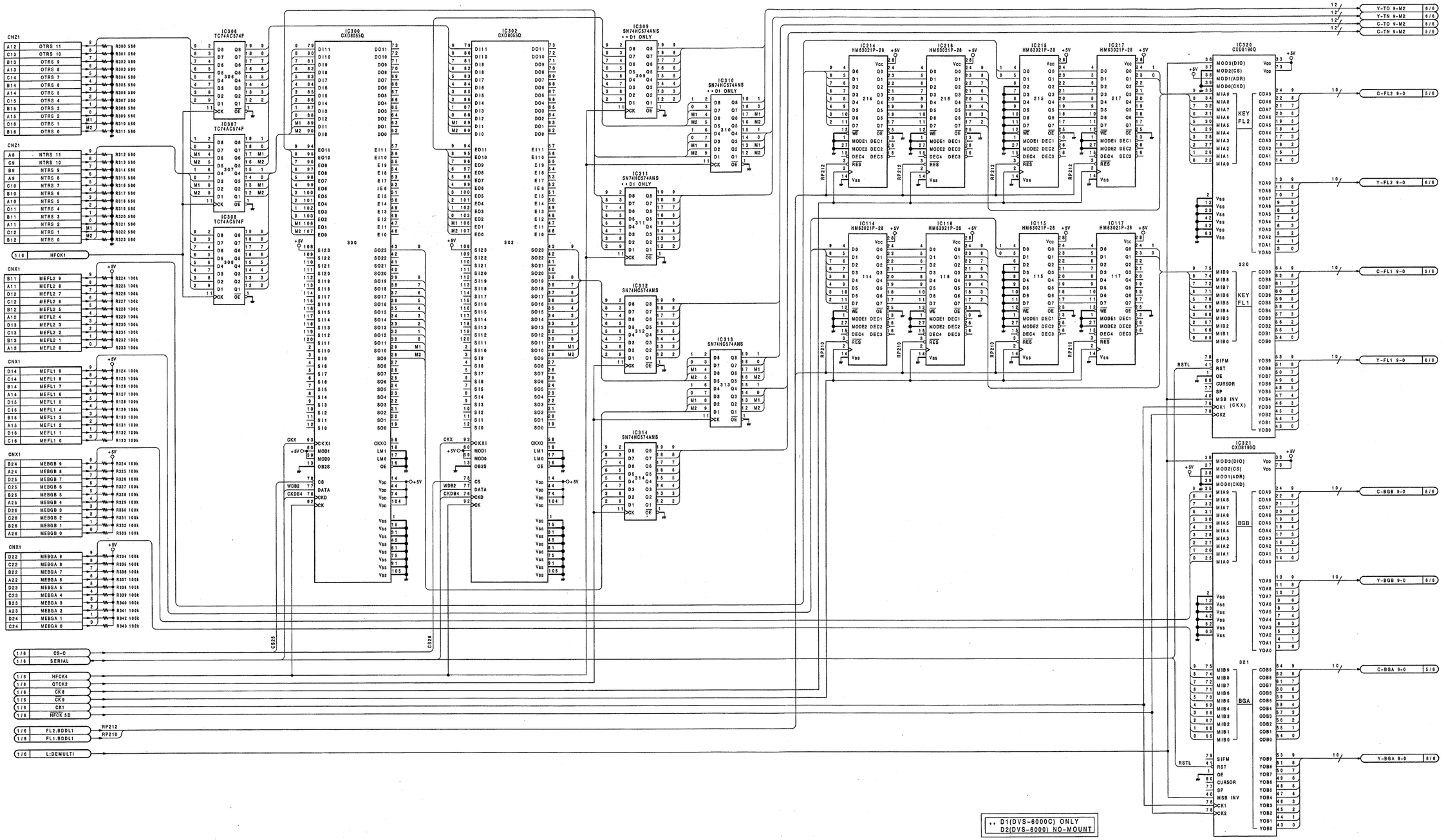

MIX-8 BOARD (4/6)

BOARD NO.1-646-027-11
DVS-6000/6000C

MIX-8(5/6);MIXER BOARD

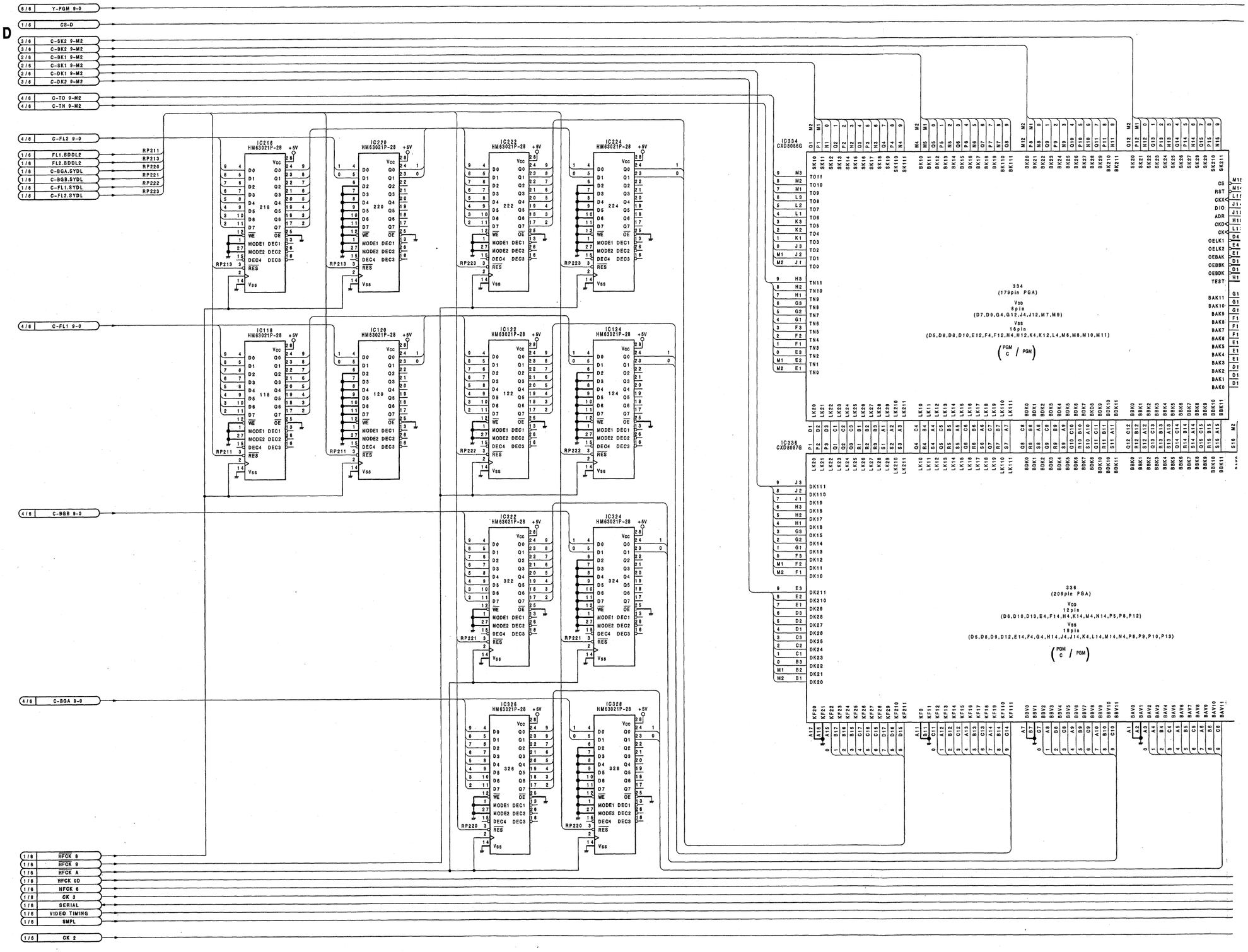

A | B | C | D | E | F | G | H

MIX-8(5/6)

MIX-8 BOARD (5/6)

BOARD NO.1-646-027-11
DVS-6000/6000C

MIX-8(6/6) MIX-8(6

MIX-8(6/6);MIXER BOARD

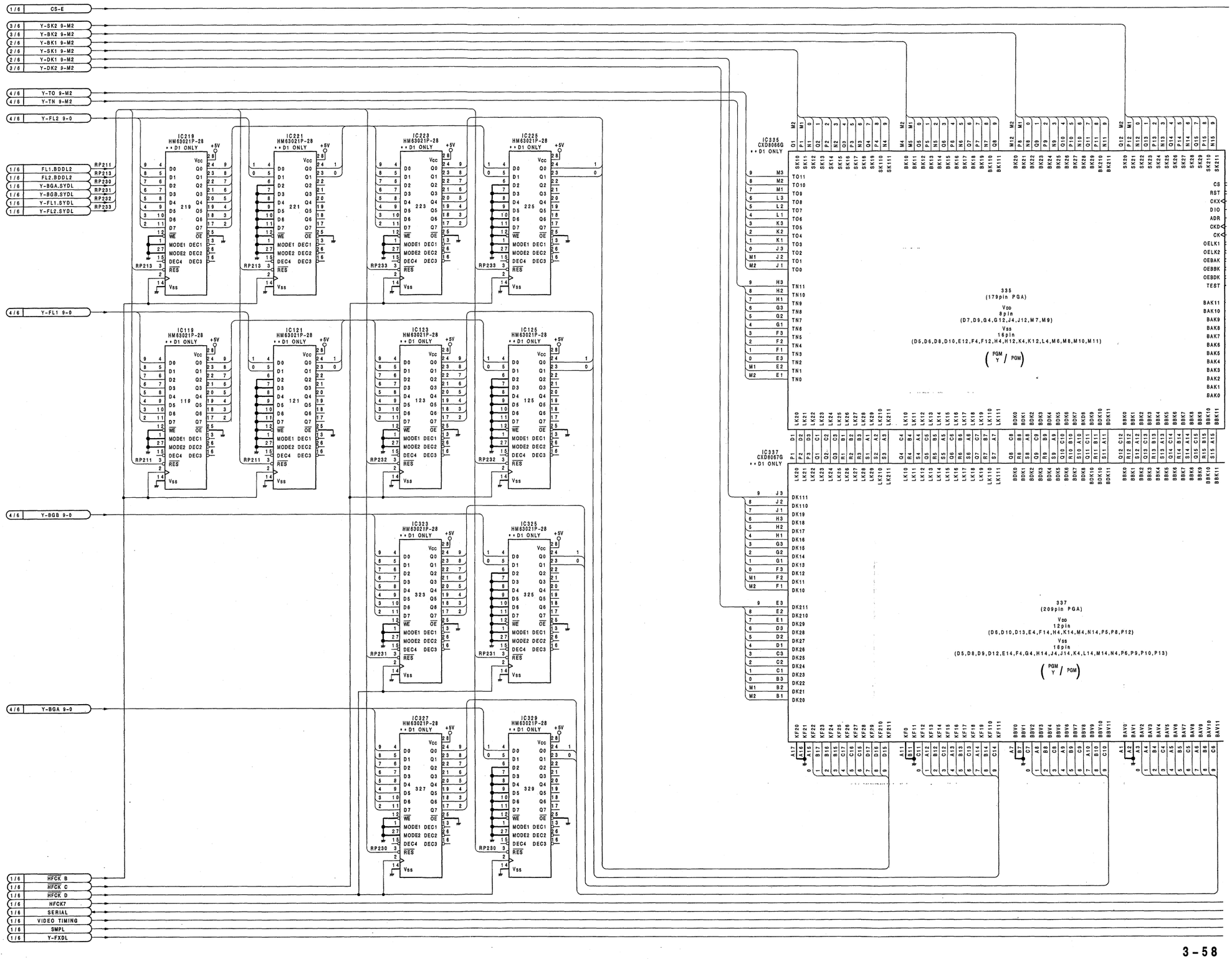

3-58

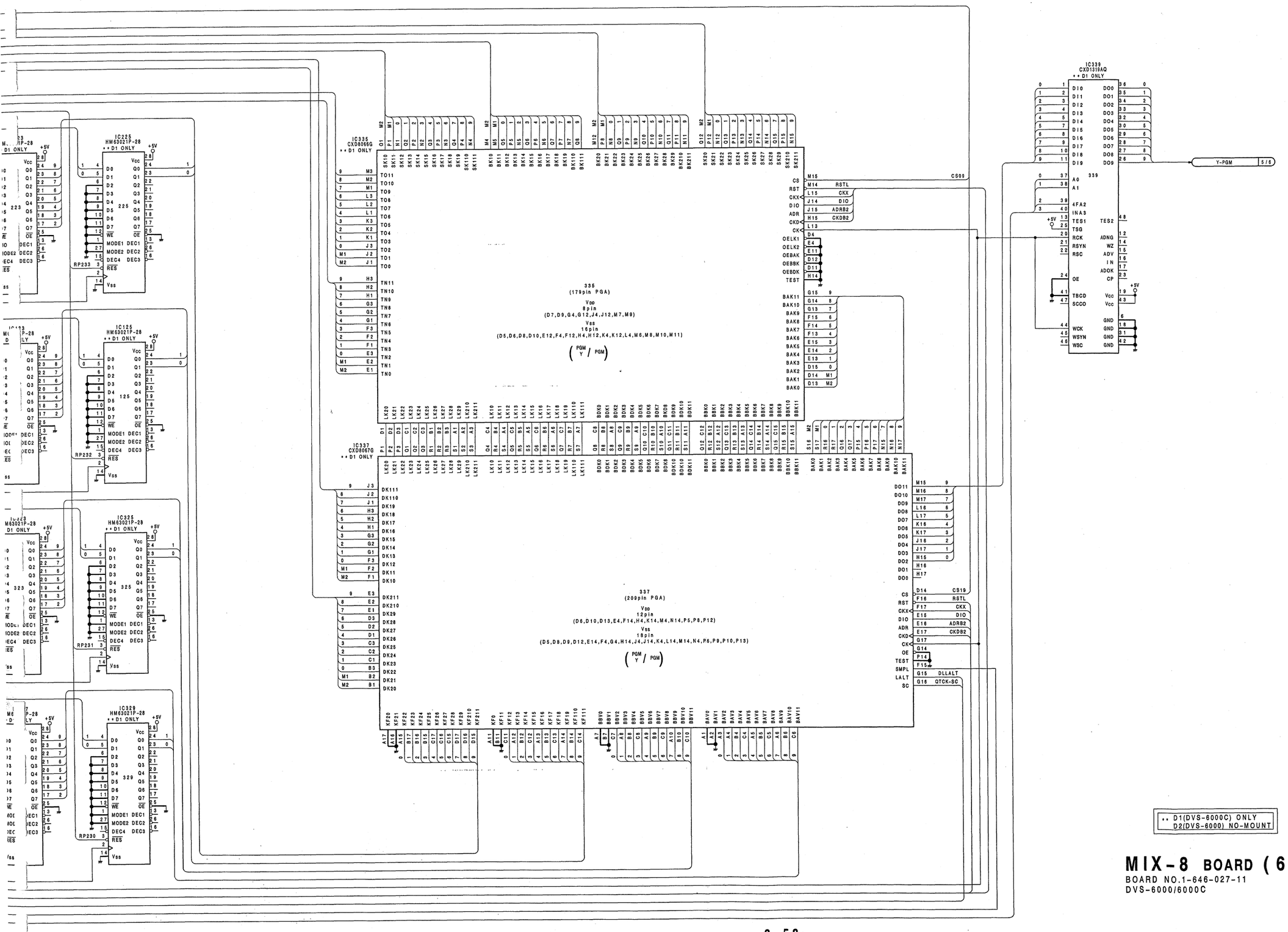

** D1(DVS-6000C) ONLY
D2(DVS-6000) NO-MOUNT

MIX-8 BOARD (6 / 6)

BOARD NO.1-646-027-11
DVS-6000/6000C

DSK-9(1/8);DSK BOARD

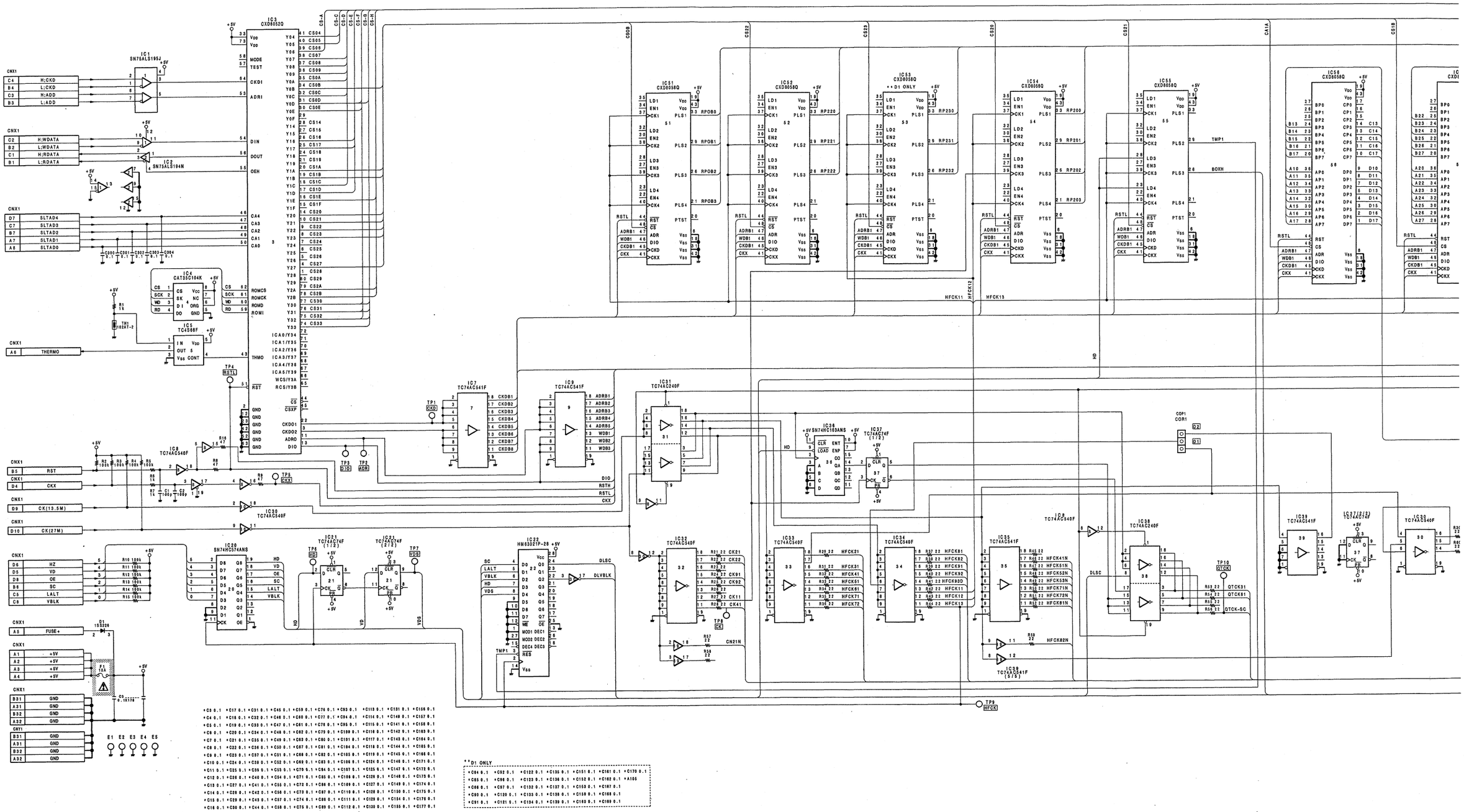

DSK-9(1/8)

DSK-9 BOARD (1/8)

BOARD NO.1-646-028-11
DVS-6000/6000C

DSK-9(2/8);DSK BOARD

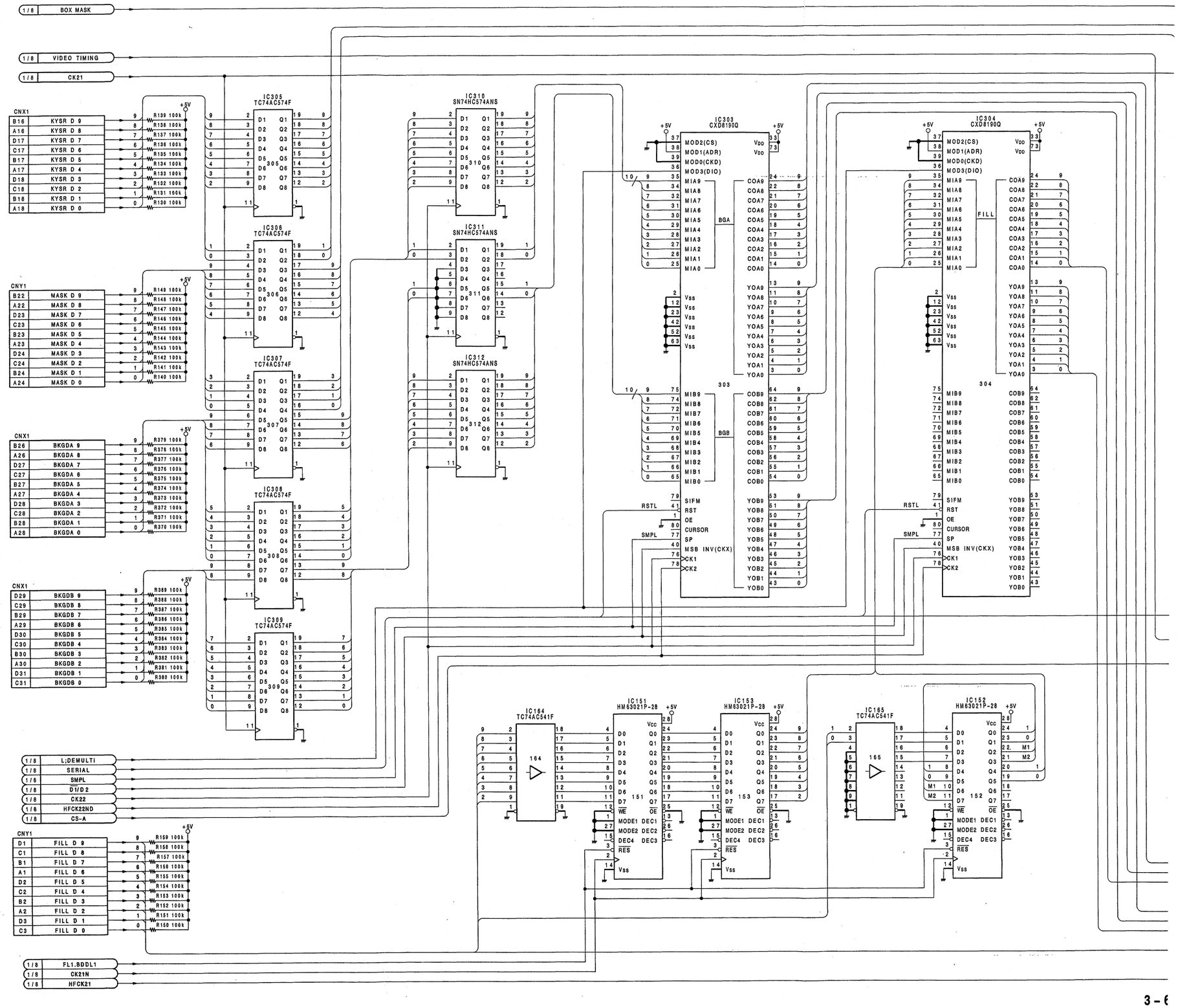

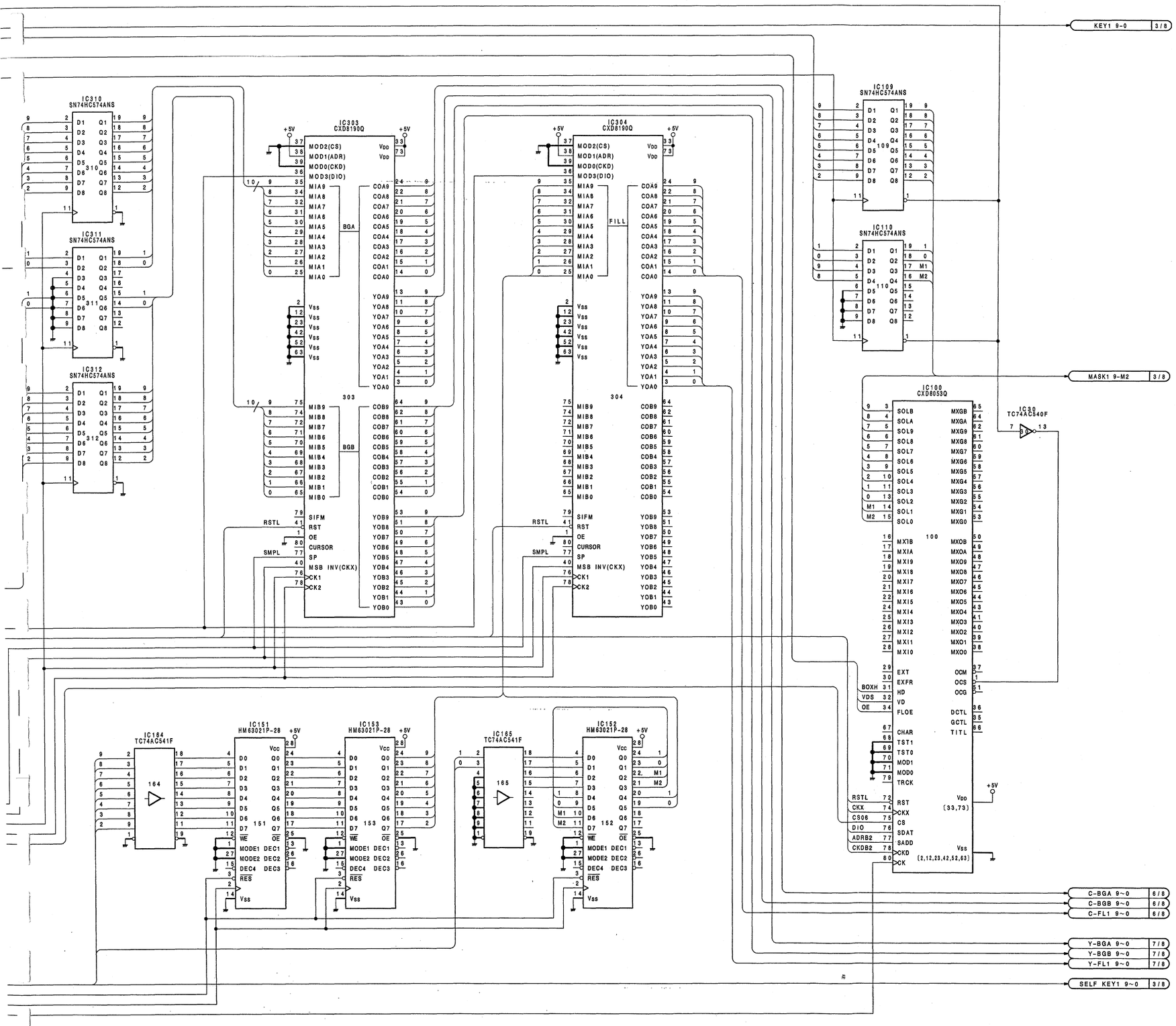

DSK-9 BOARD (2/8)

BOARD NO.1-646-028-11
DVS-6000/6000C

E F G H I J K L

DSK-9(3/8);DSK BOARD

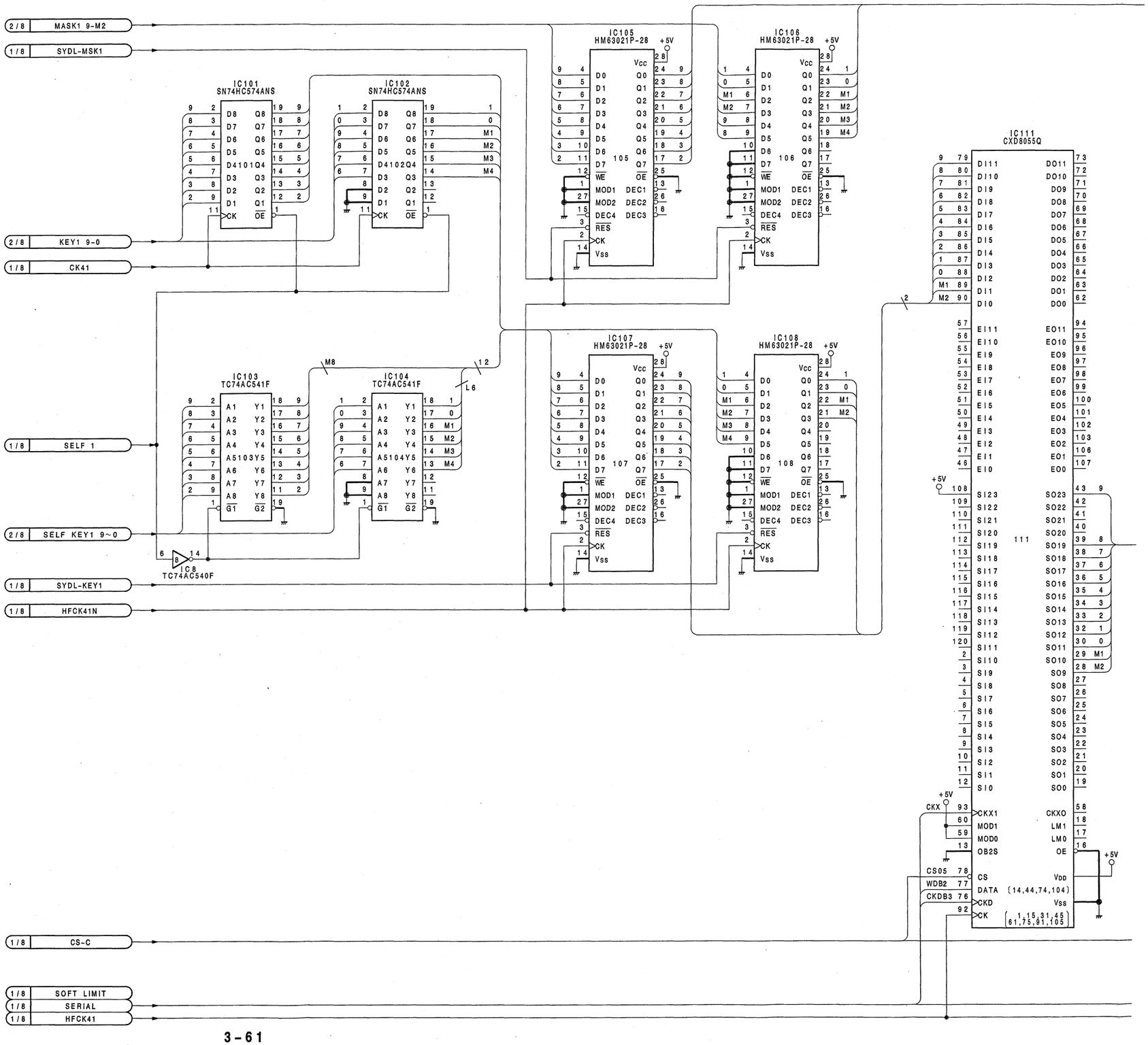

3-61

A B C D E F G H

IC102
SN74HC574ANS

IC104
TC74AC541F

IC105
HM63021P-28

IC106
HM63021P-28

IC107
HM63021P-28

IC108
HM63021P-28

IC111
CXD8055Q

IC112
CXD8065Q

NARW KEY1 9-M2 4/8

DSK-9 BOARD (3/8)

BOARD NO.1-646-028-11
DVS-6000/6000C

DSK-9(4/8) DSK-9(4

DSK-9(4/8);DSK BOARD

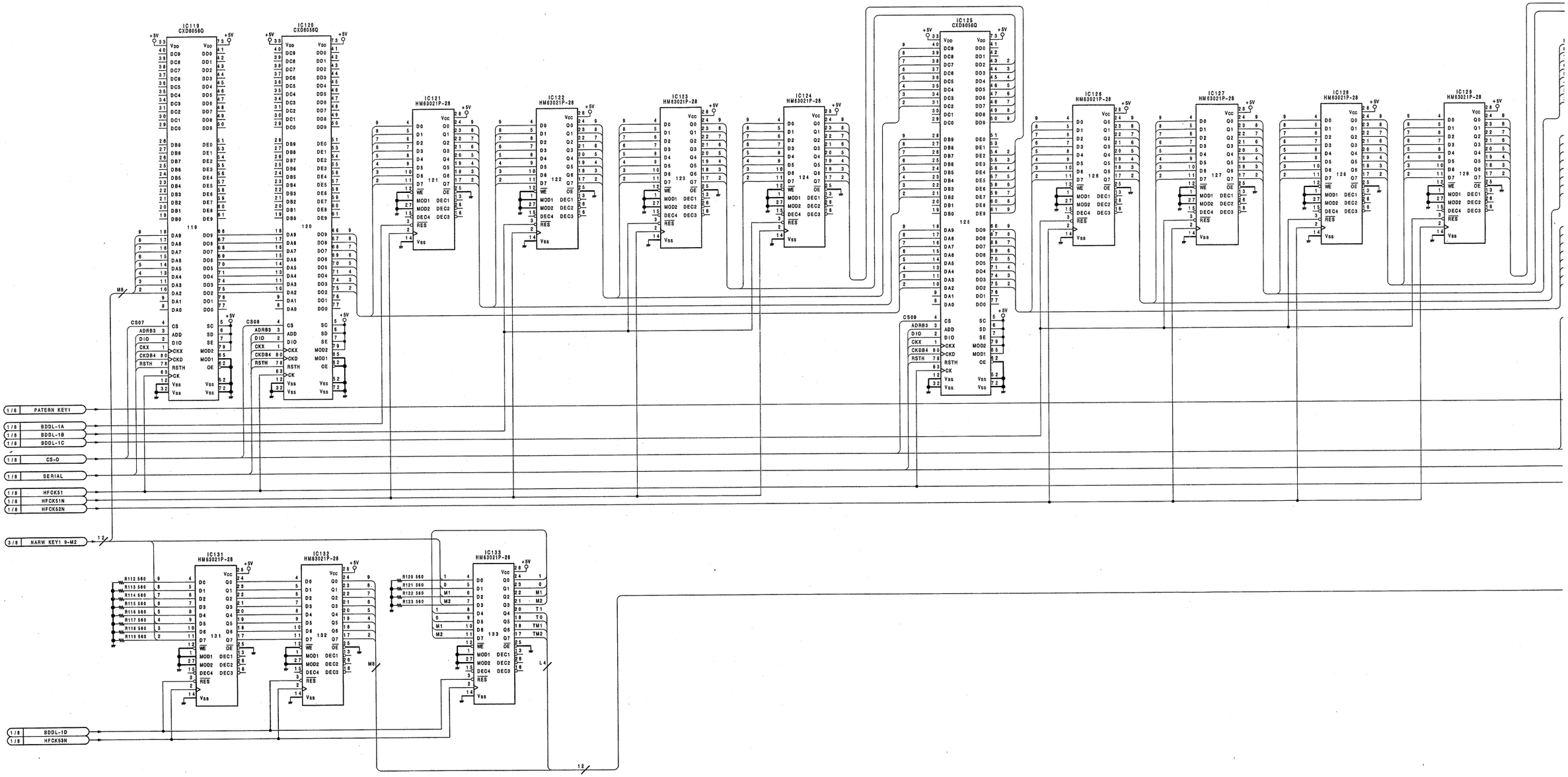

3-62

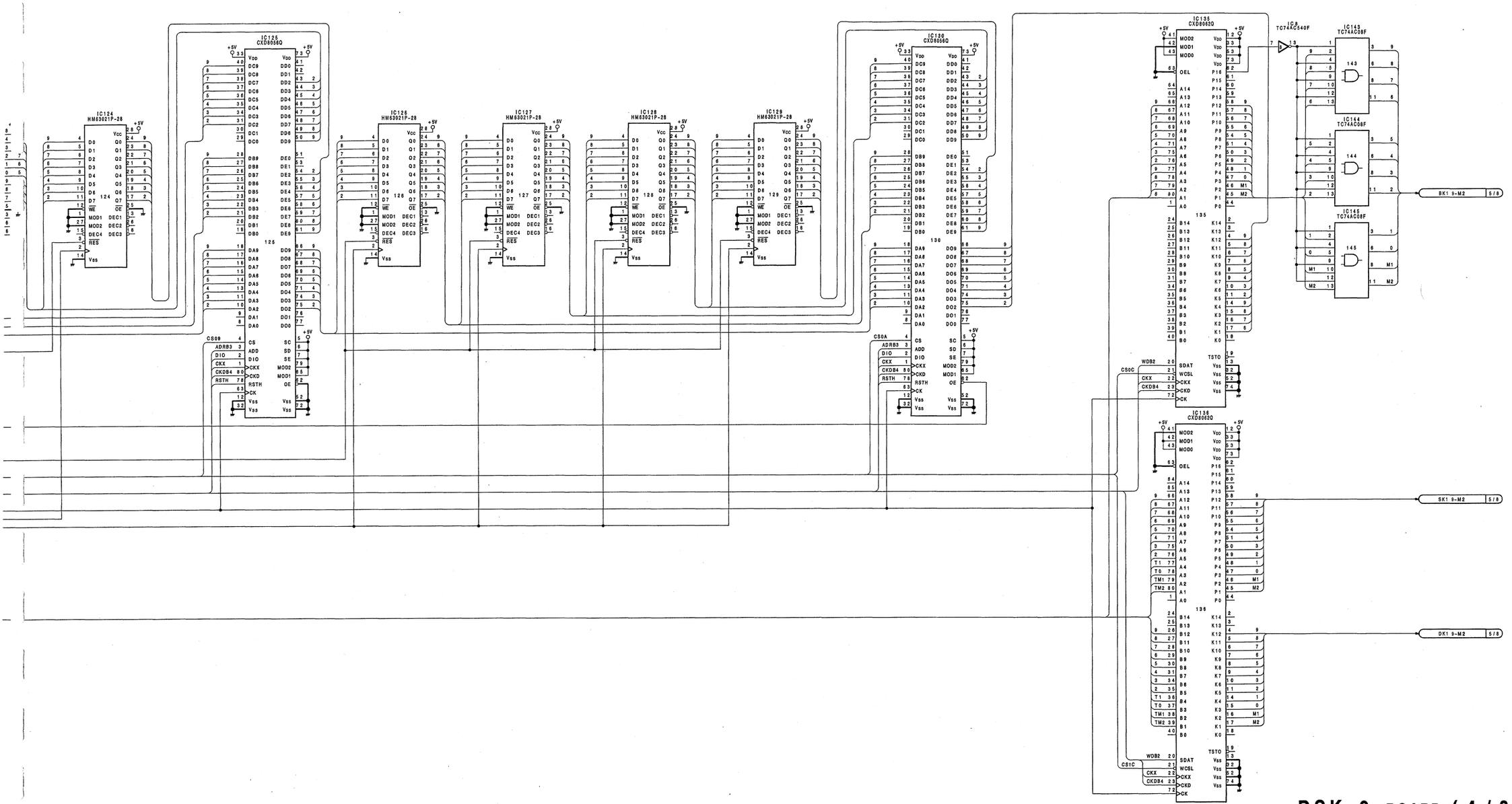

DSK-9 BOARD (4 / 8)

BOARD NO.1-646-028-11
DVS-6000/6000C

DSK-9(5/8);DSK BOARD

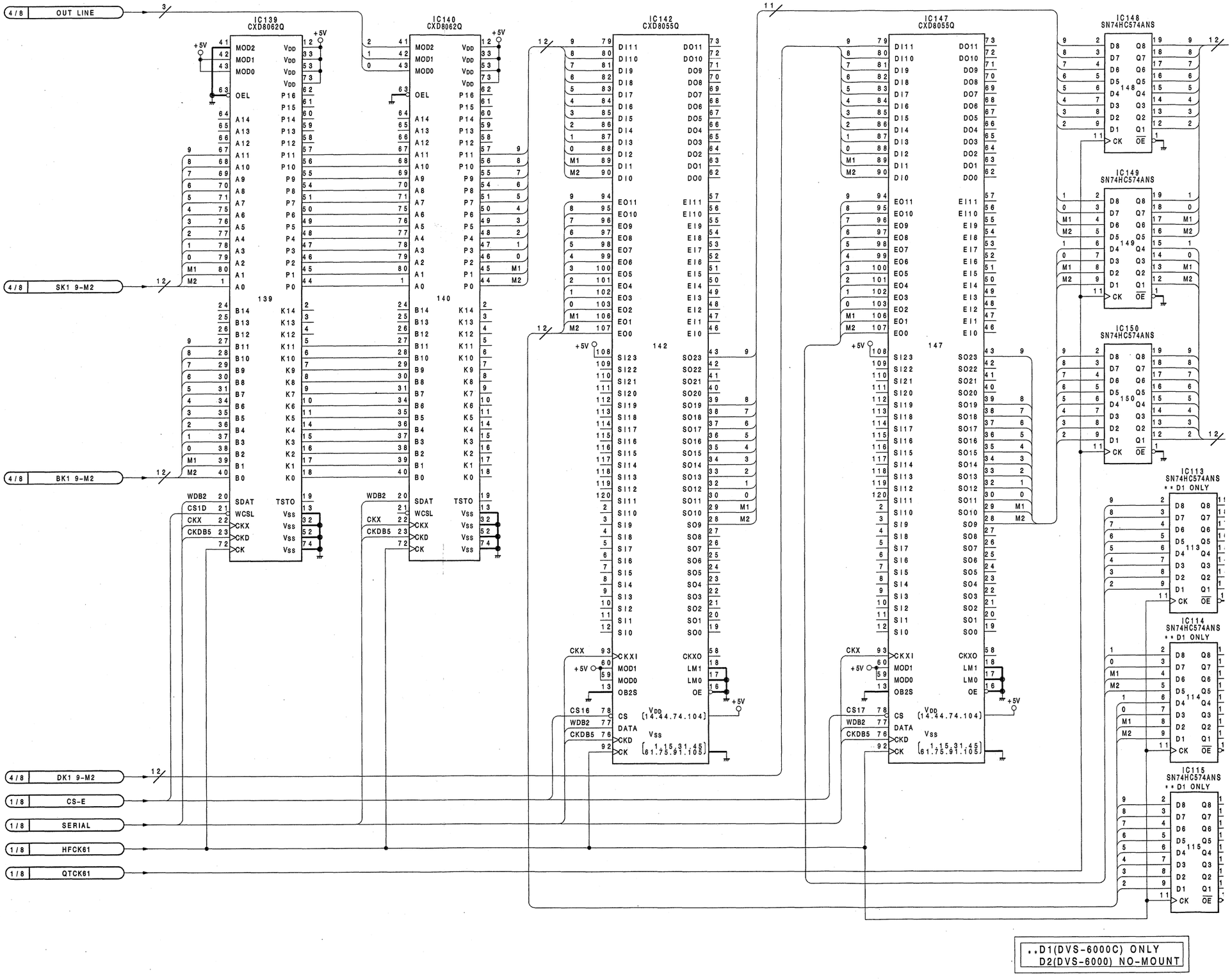

* * D1(DVS-6000C) ONLY
D2(DVS-6000) NO-MOUNT

A | B | C | D | E | F | G | H

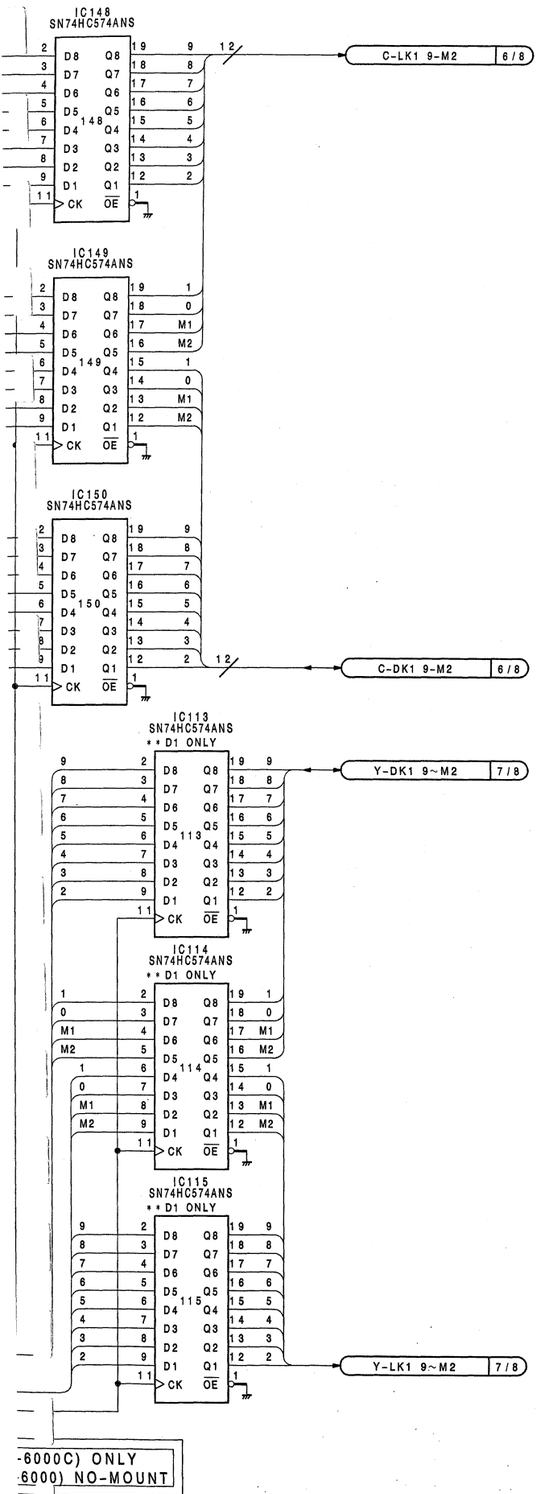

DSK-9 BOARD (5 / 8)

BOARD NO.1-646-028-11
DVS-6000/6000C

DSK-9(6/8);DSK BOARD

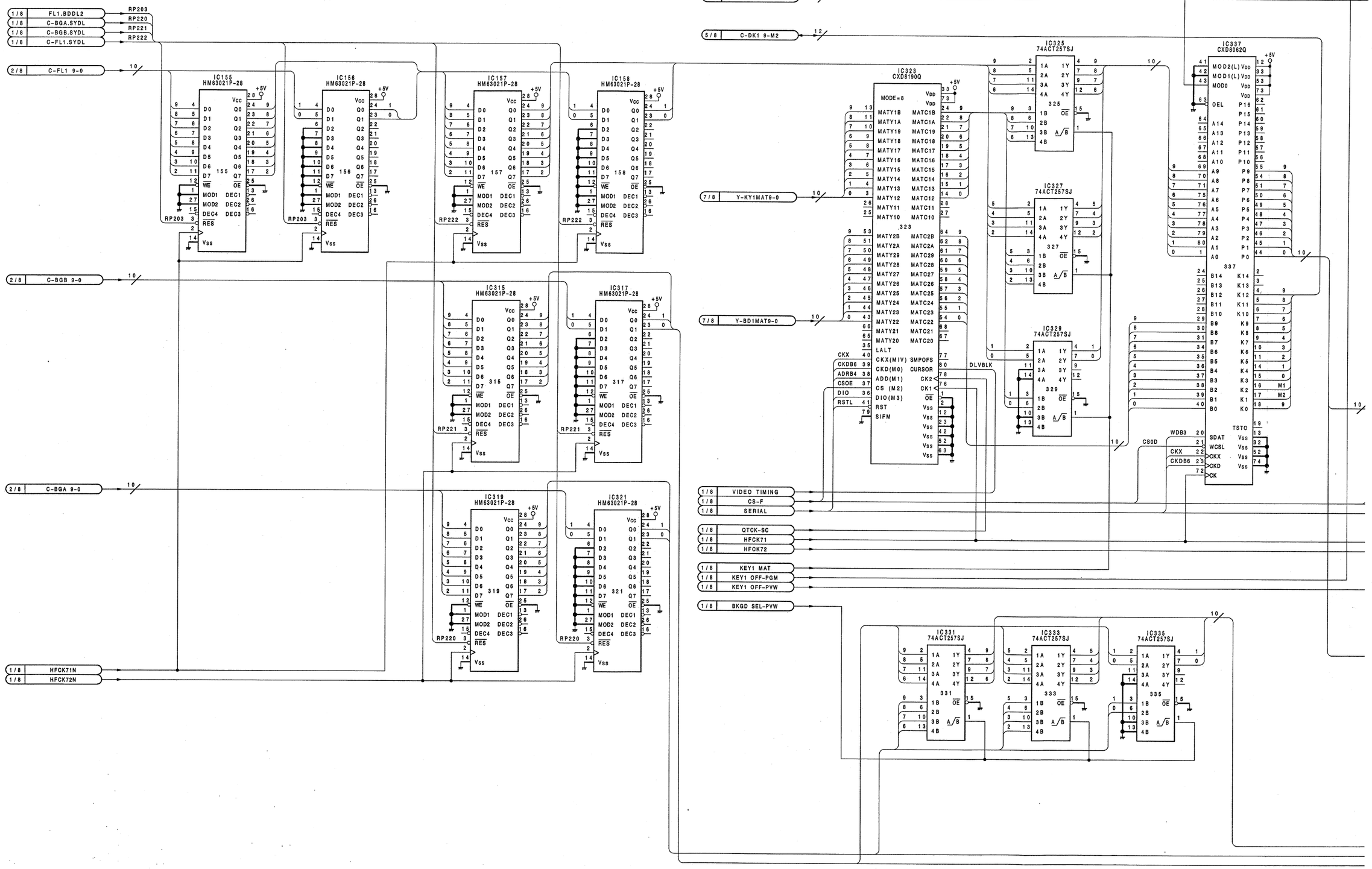

A B C D E F G H

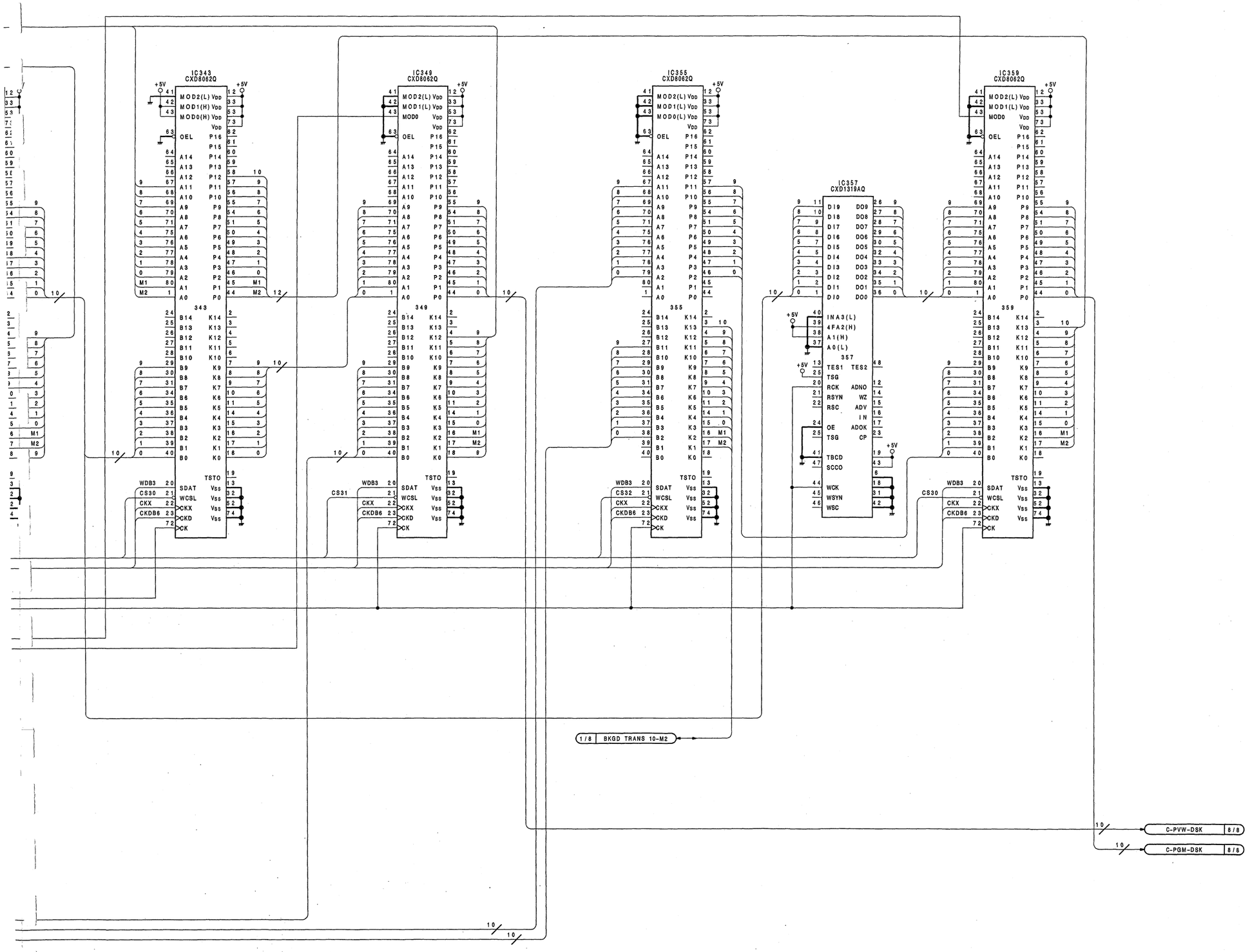

DSK-9 BOARD (6/8)

BOARD NO.1-646-028-11
DVS-6000/6000C

DSK-9(7/8);DSK BOARD

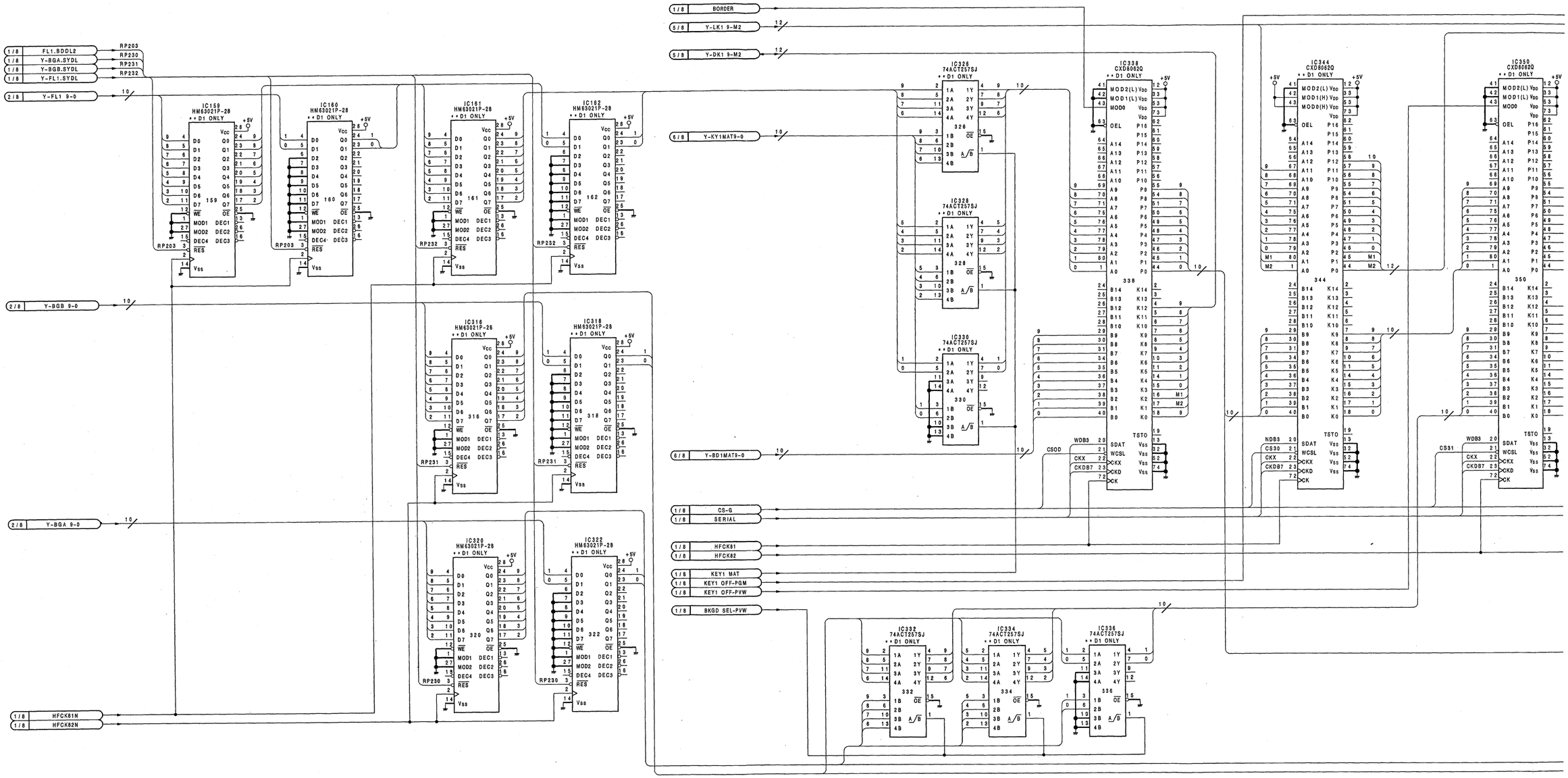

A | B | C | D | E | F | G | H

DSK-9(7/8)

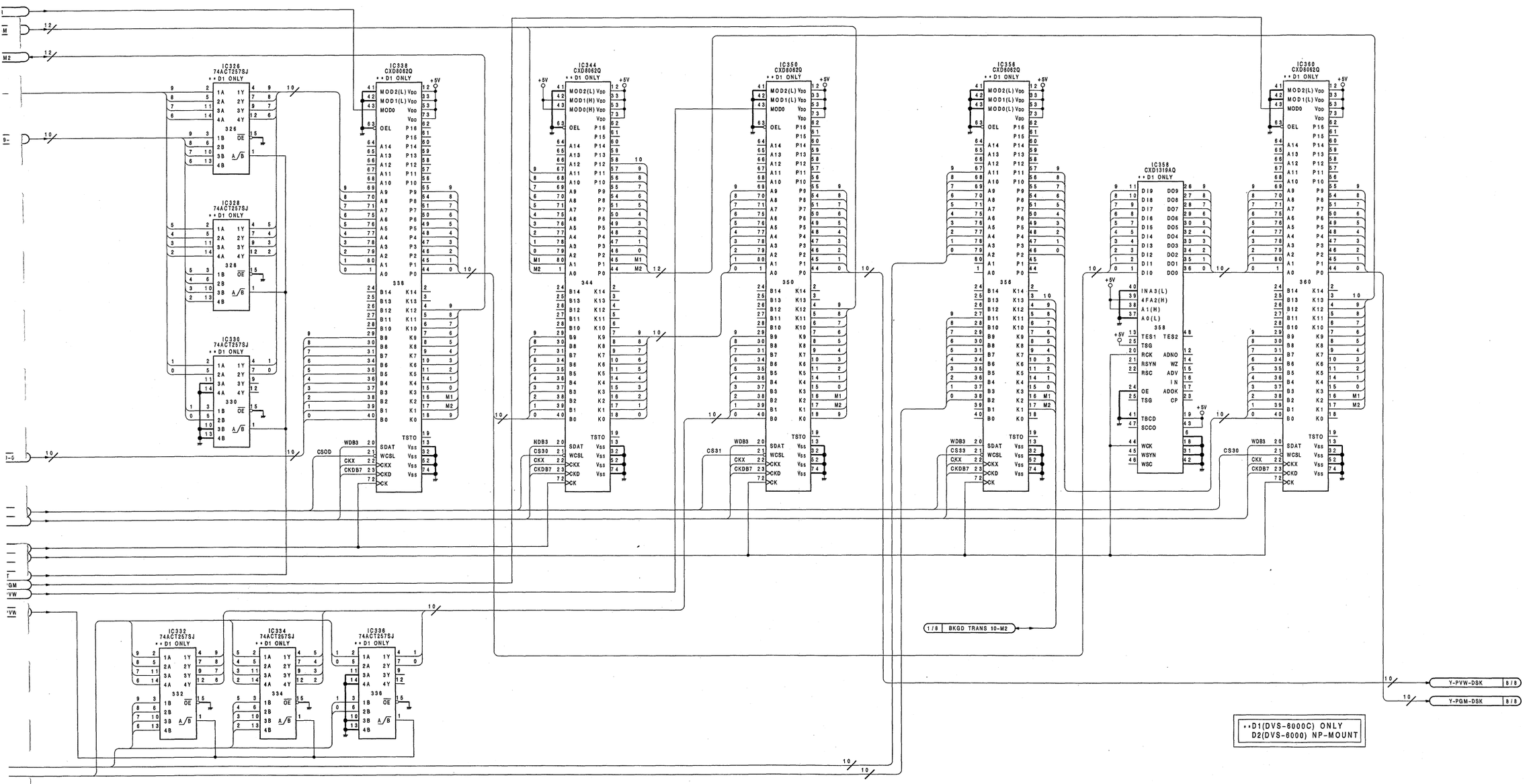

DSK-9 BOARD (7/8)

BOARD NO.1-646-028-11
DVS-6000/6000C

DSK-9(8/8);DSK BOARD

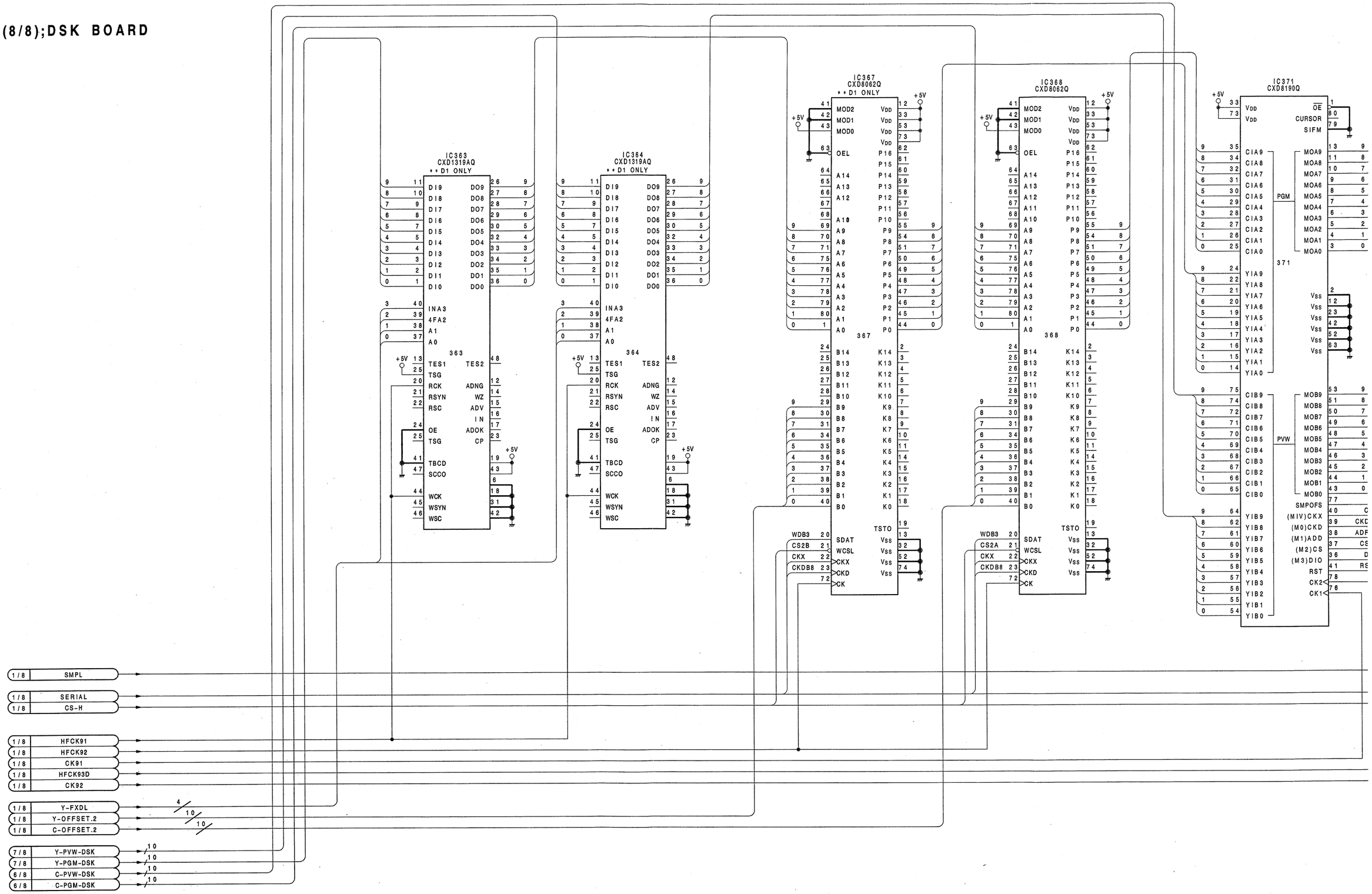

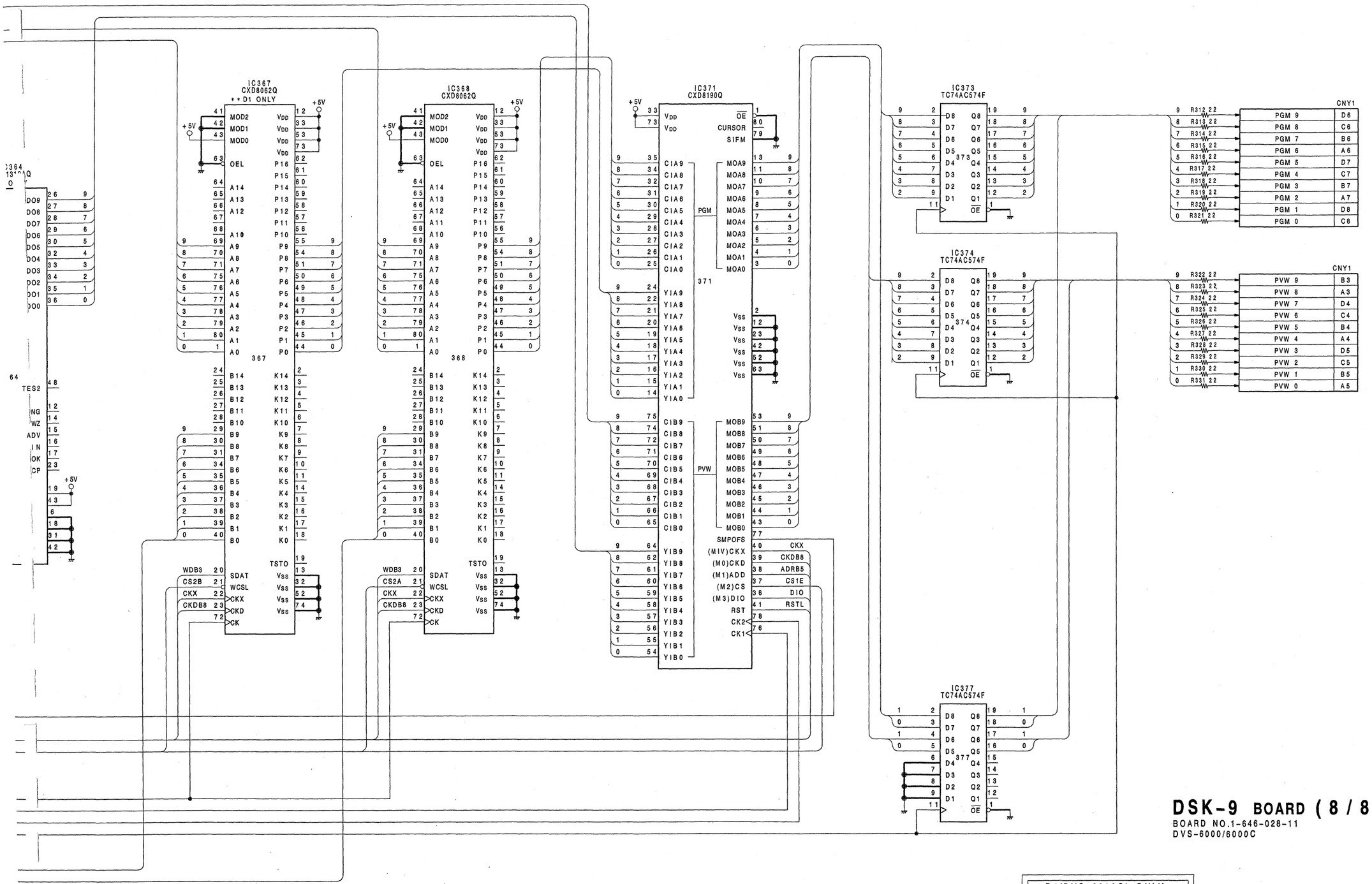

DSK-9 BOARD (8/8)

BOARD NO.1-646-028-11
DVS-6000/6000C

..D1(DVS-6000C) ONLY
D2(DVS-6000) NO-MOUNT

E F G H I J K L

OUT-3(1/4);OUTPUT PROCESSOR BOARD

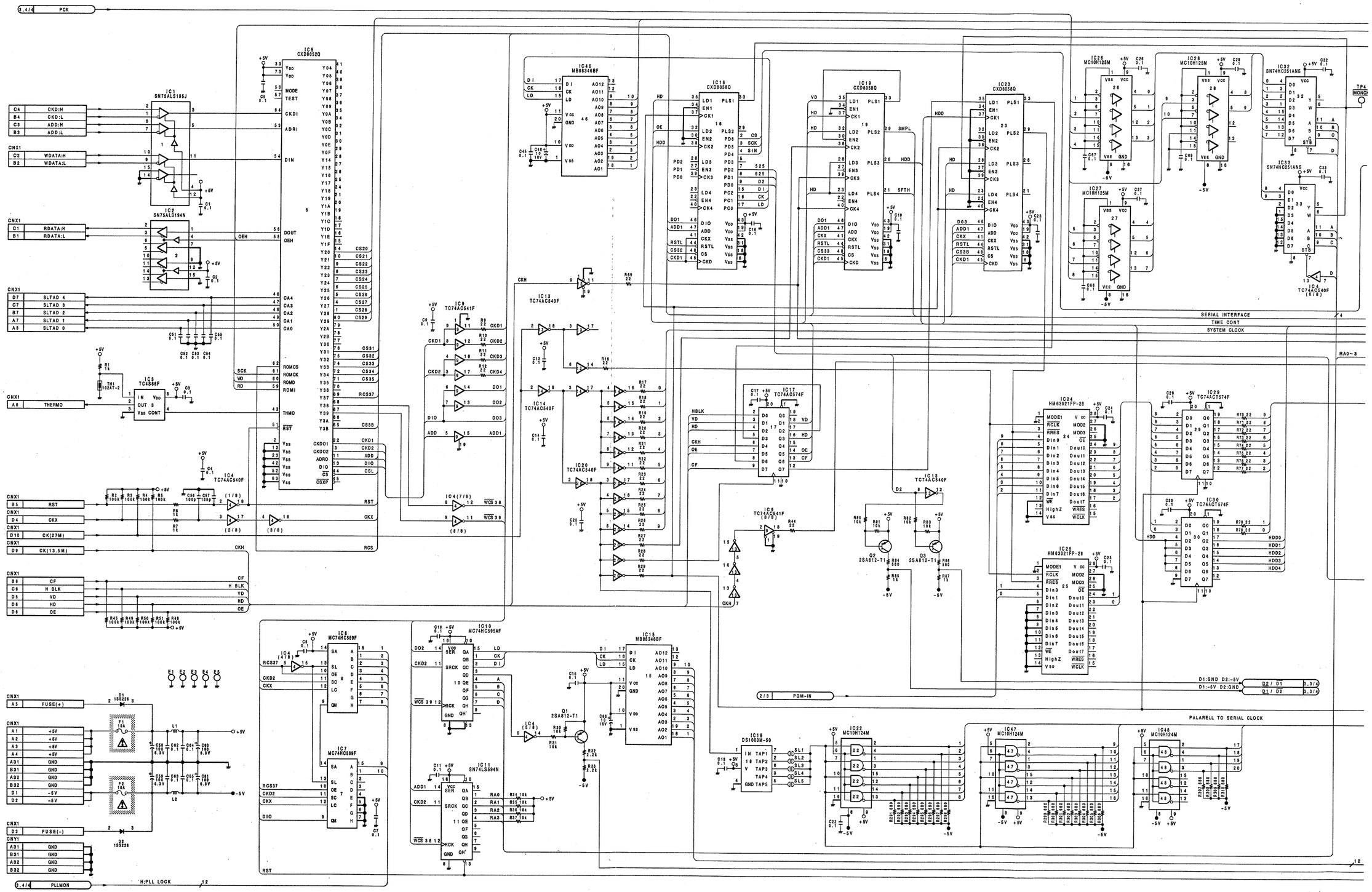

3-67

A | B | C | D | E | F | G | H

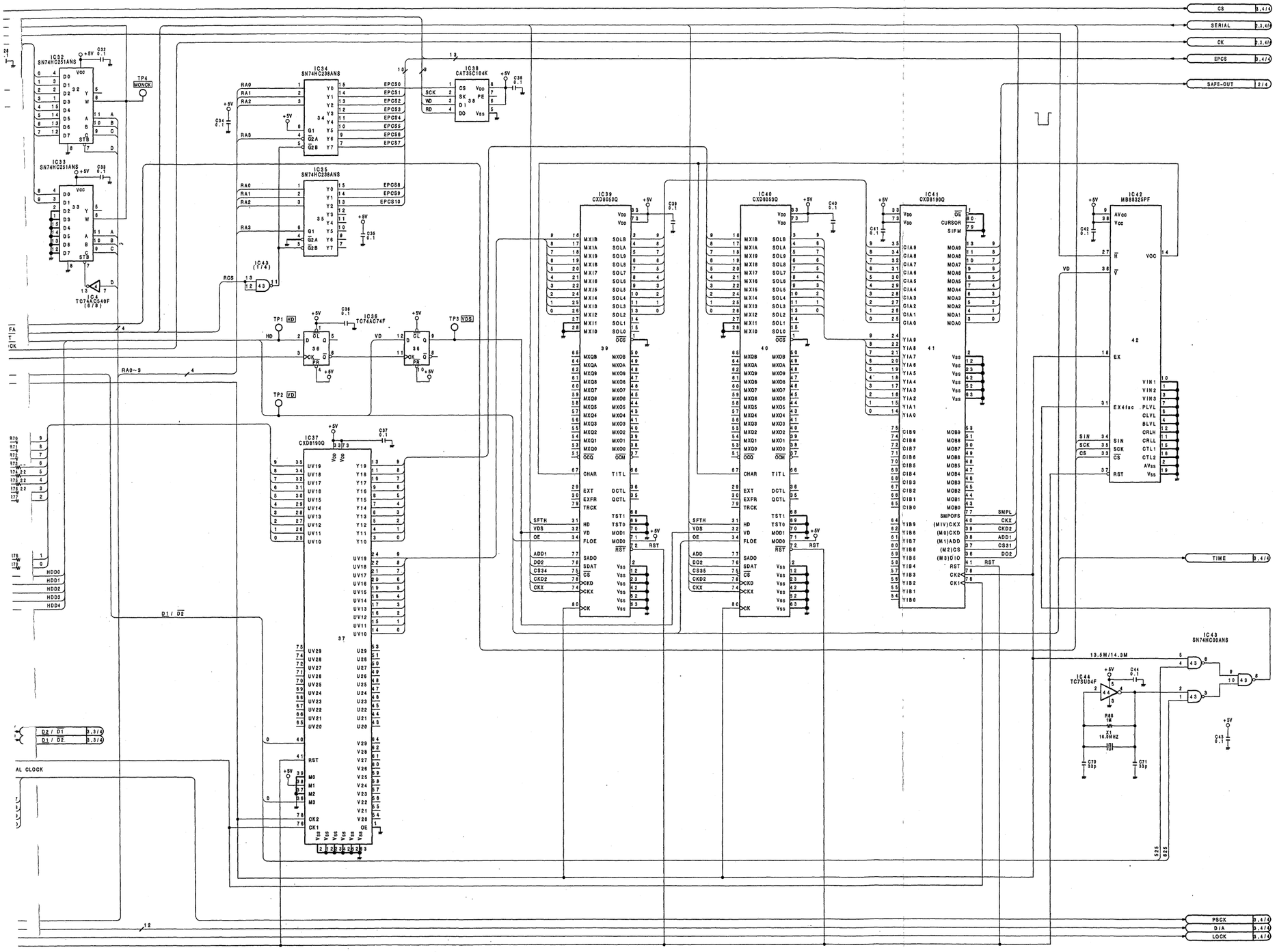

OUT-3 BOARD (1/4)

BOARD NO.1-646-029-11
DVS-6000/6000C

OUT-3(2/4);OUTPUT PROCESSOR BOARD

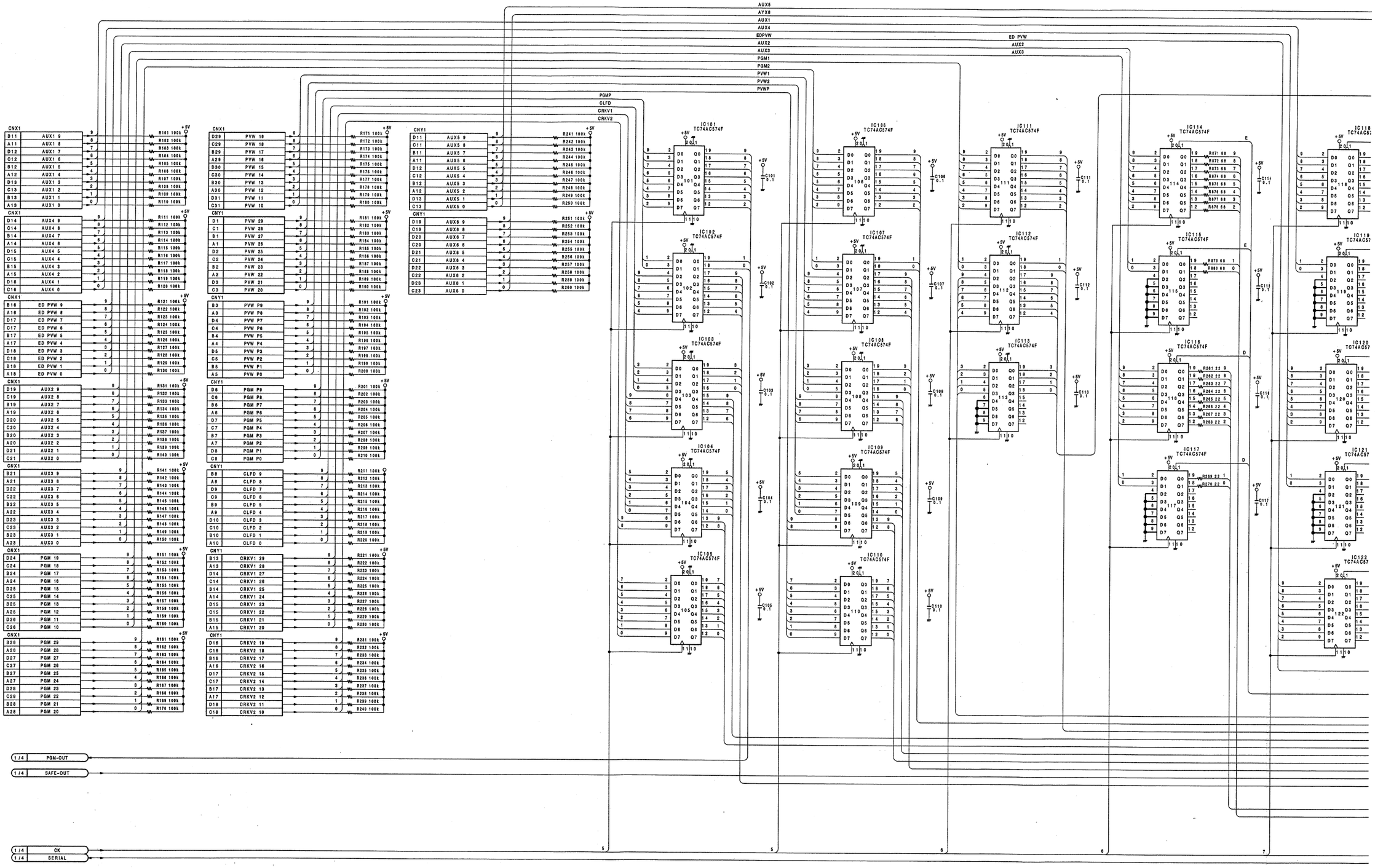

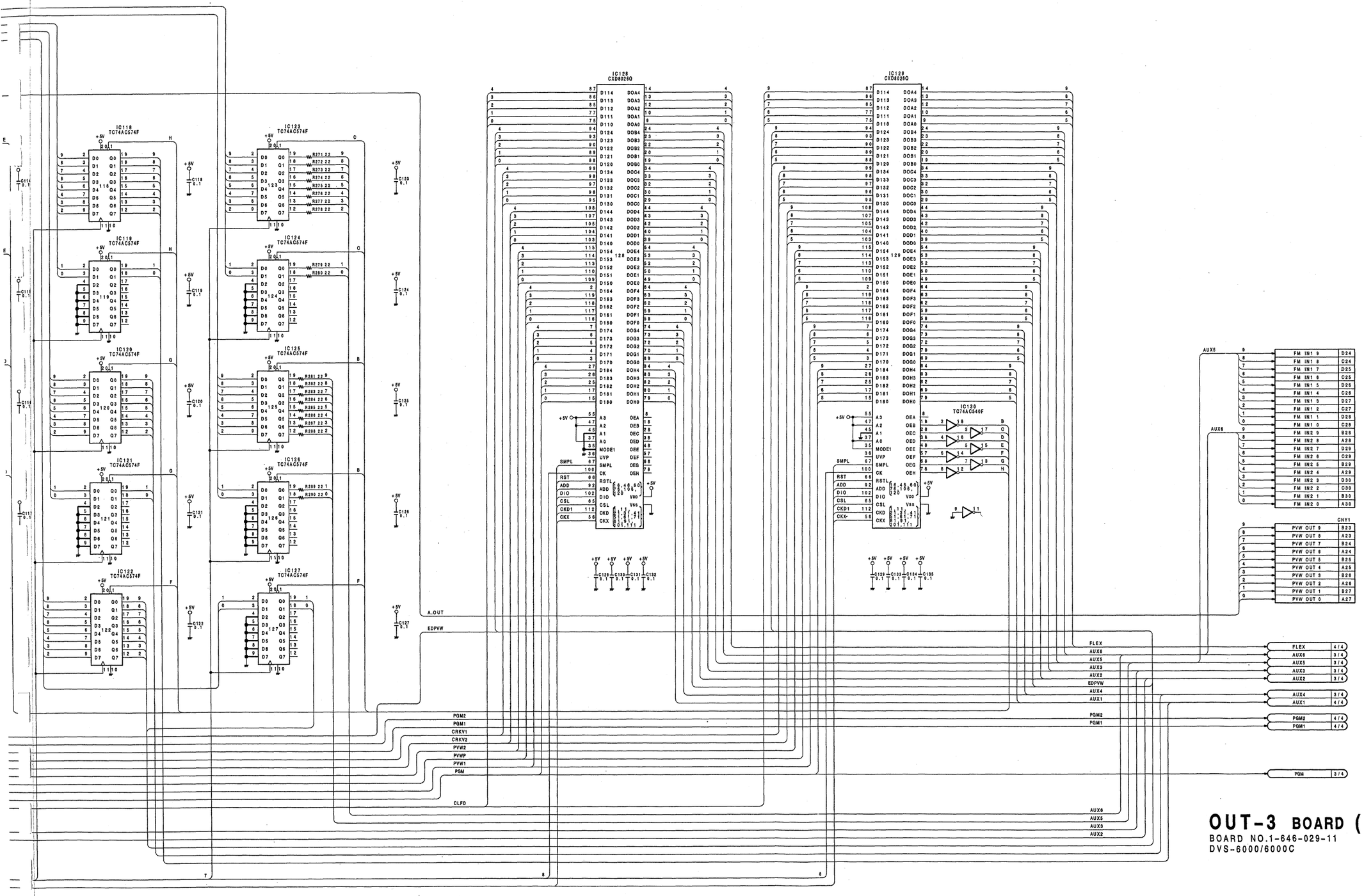

OUT-3 BOARD (2/4)

BOARD NO.1-646-029-11
DVS-6000/6000C

OUT-3(3/4);OUTPUT PROCESSOR BOARD

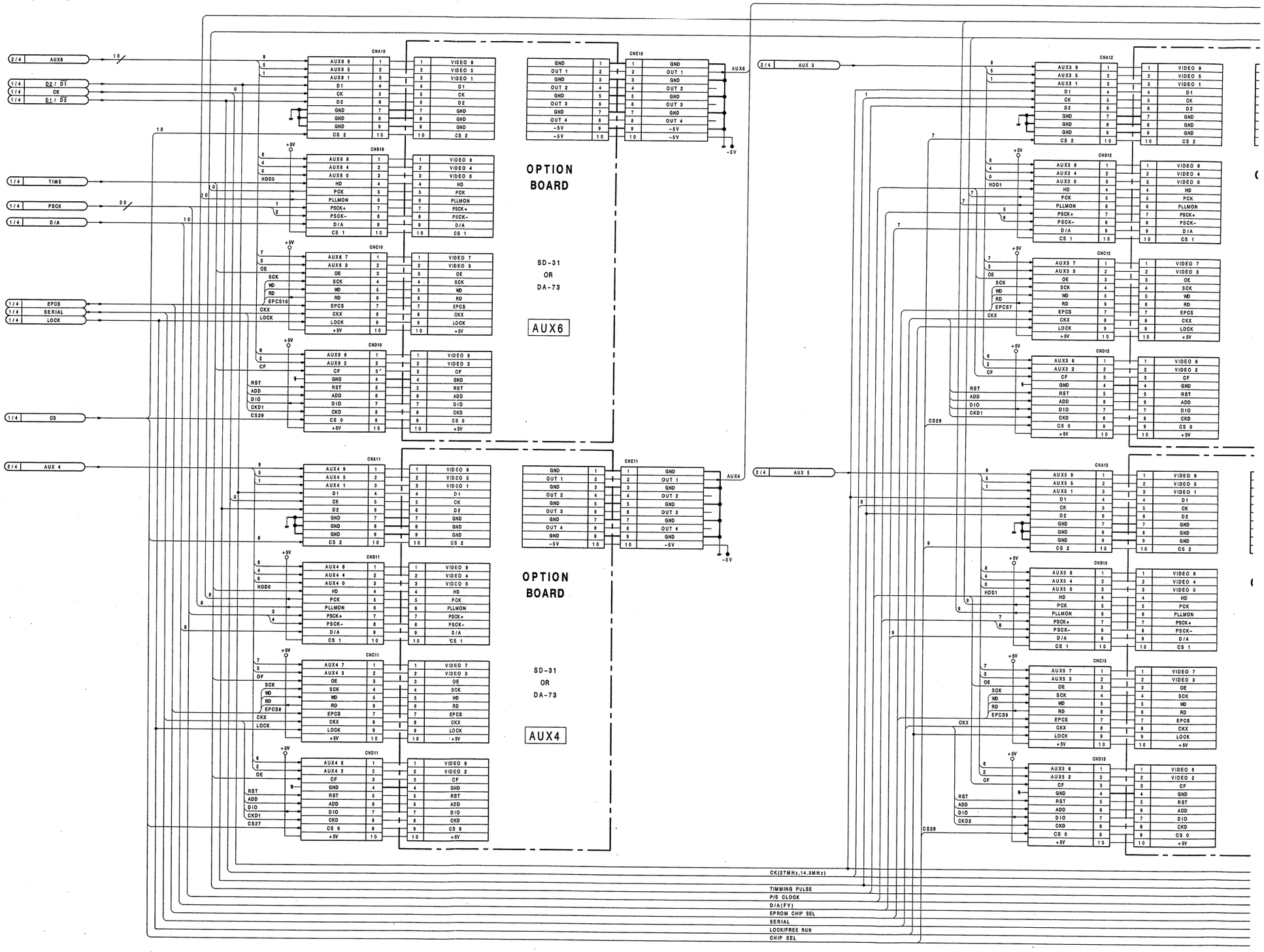

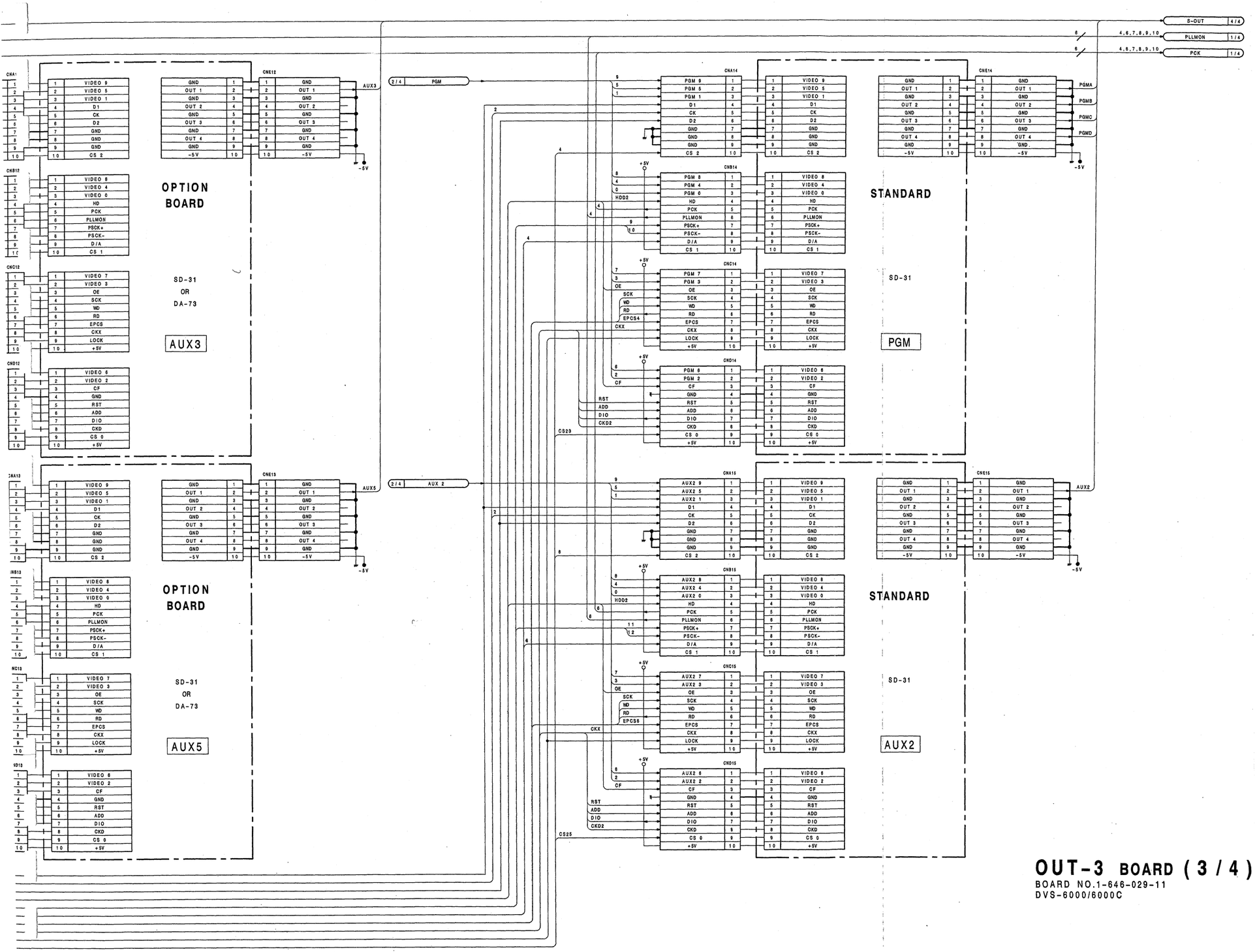

OUT-3 BOARD (3/4)

BOARD NO.1-646-029-11
DVS-6000/6000C

OUT-3(4/4);OUTPUT PROCESSOR BOARD

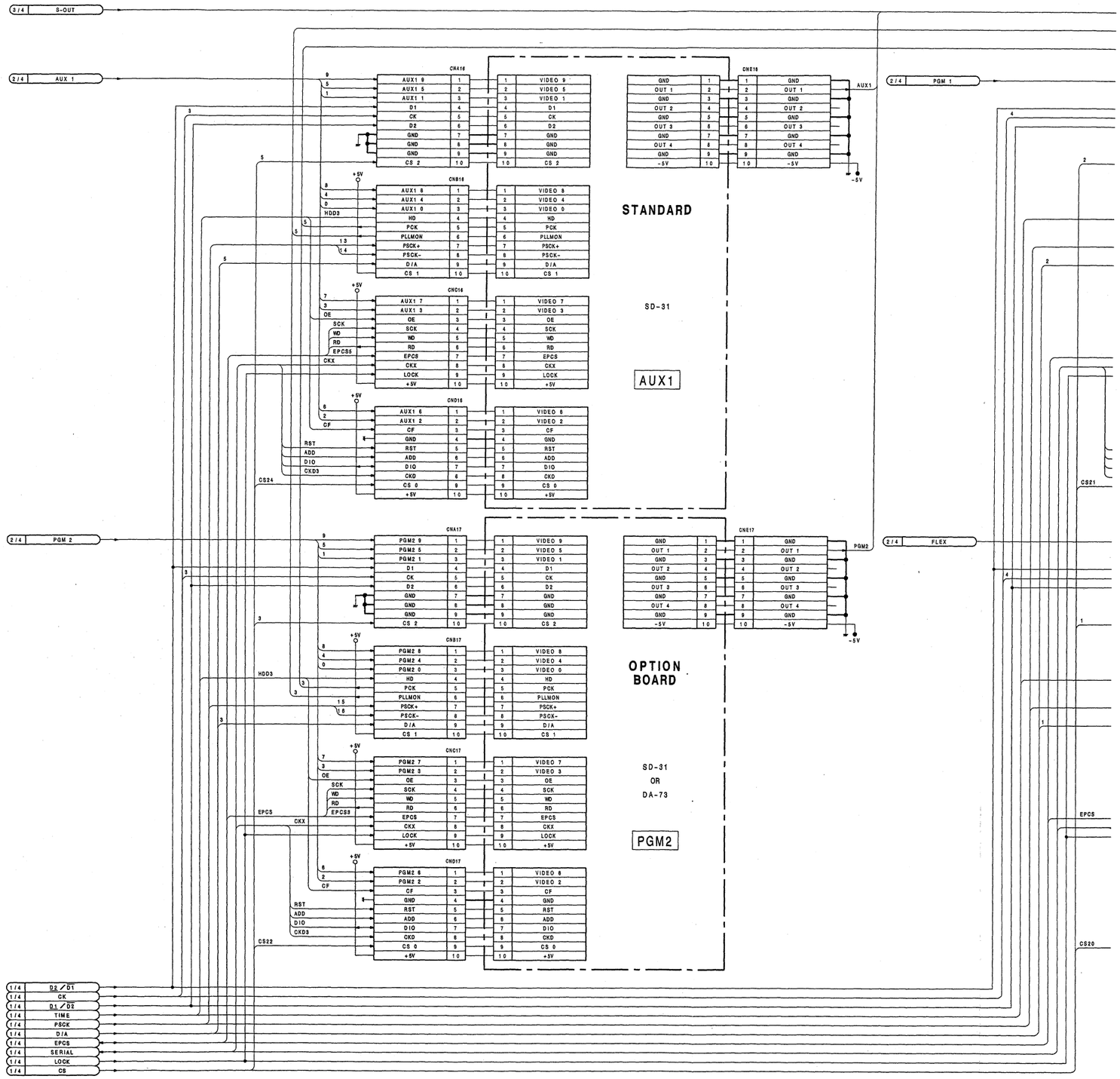

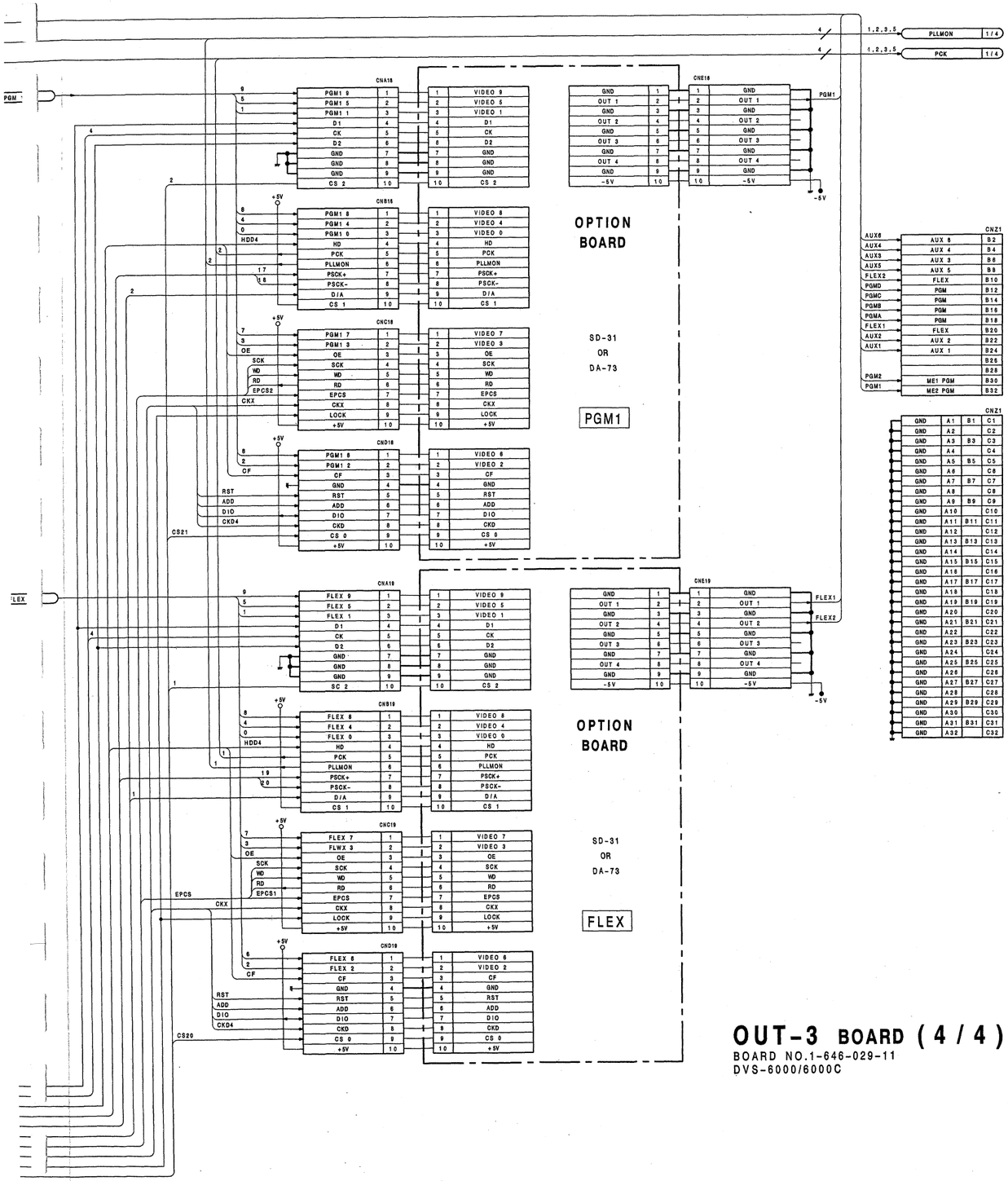

OUT-3 BOARD (4 / 4)

BOARD NO.1-646-029-11
DVS-6000/6000C

SD-31(BKDS-6063);DIGITAL EDIT PVW/REF OUTPUT BOARD

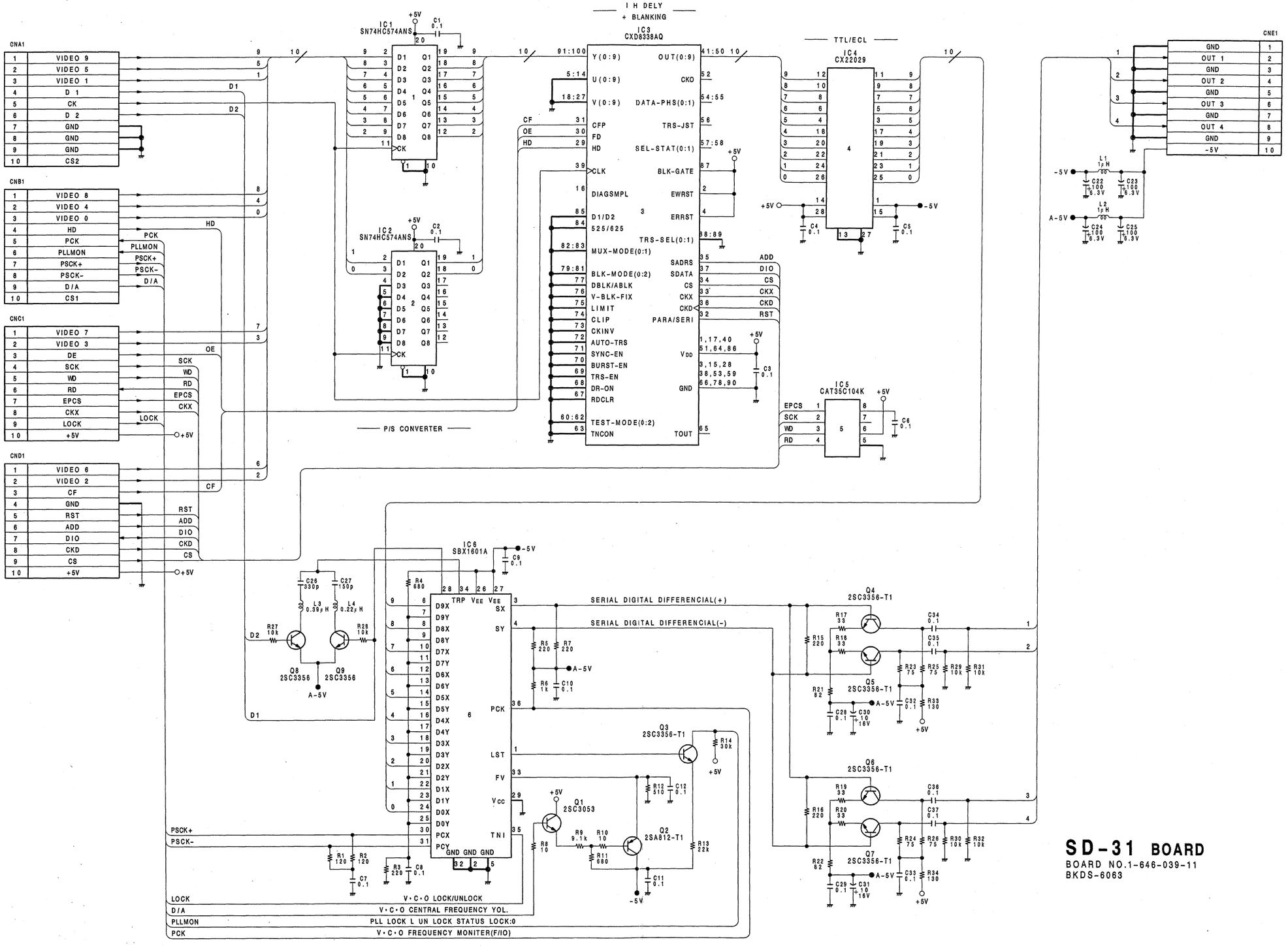

SD-31 BOARD
BOARD NO.1-646-039-11
BKDS-6063

3-71

DA-73(BKDS-6064);ANALOG OUTPUT BOARD:DVS-6000 ONLY

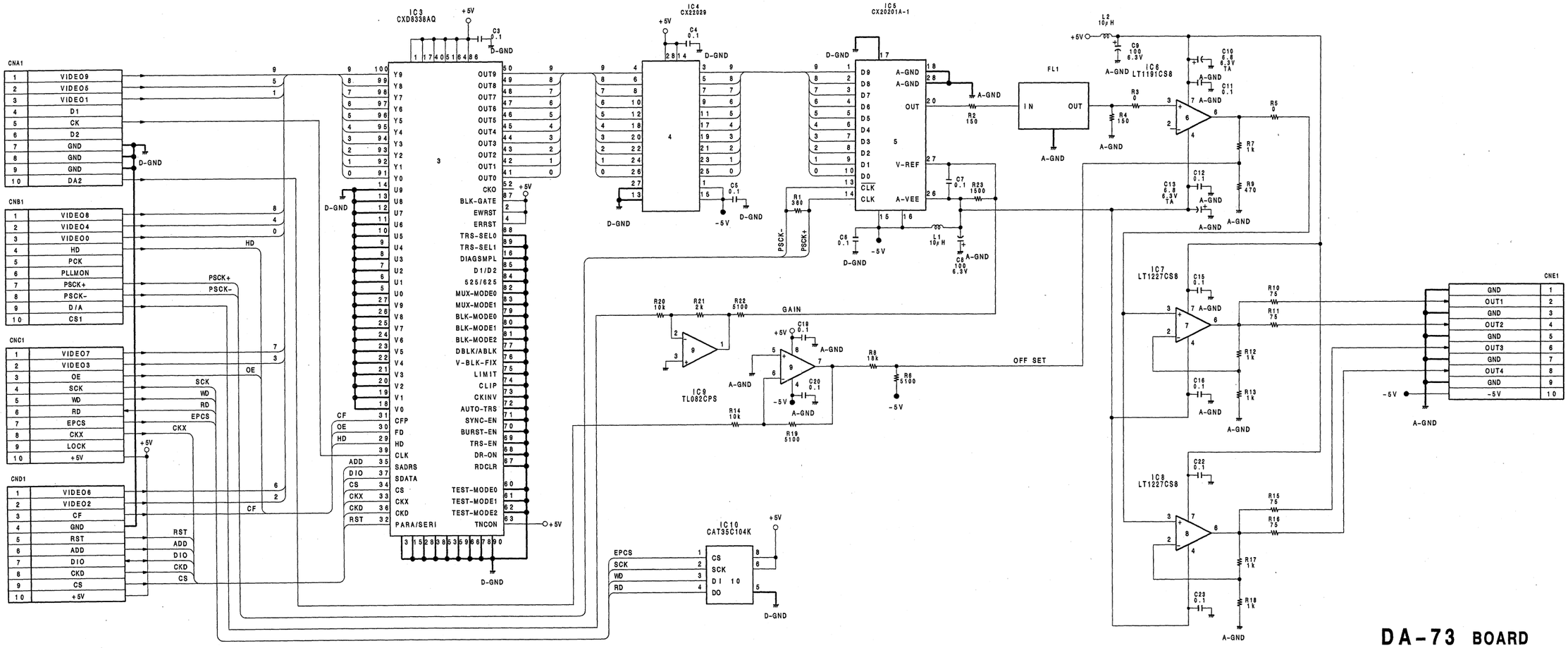

DA-73 BOARD

BOARD NO.1-646-040-11
BKDS-6064

MAT-4(1/2);MATTE GENERATOR BOARD

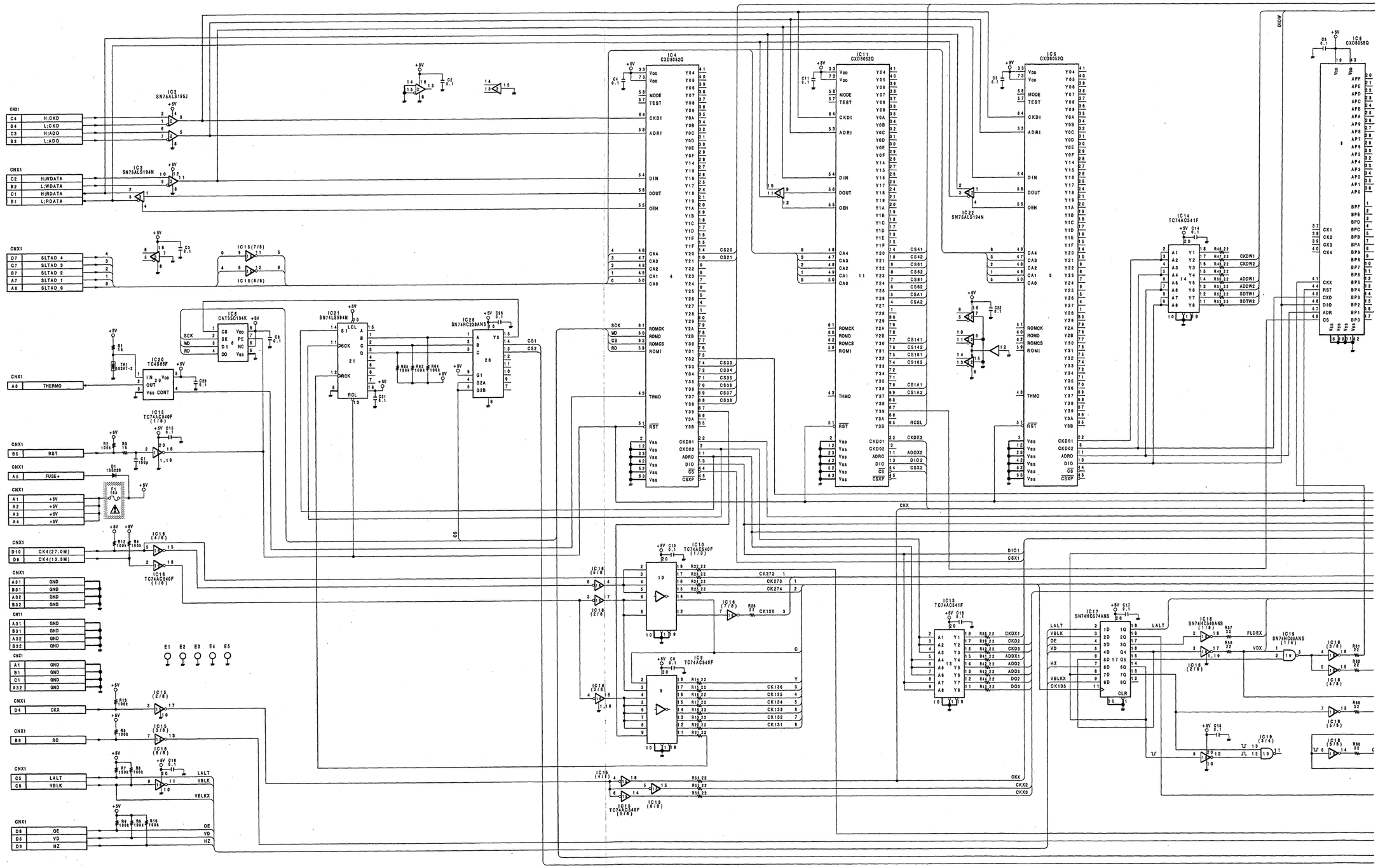

A B C D E F G H

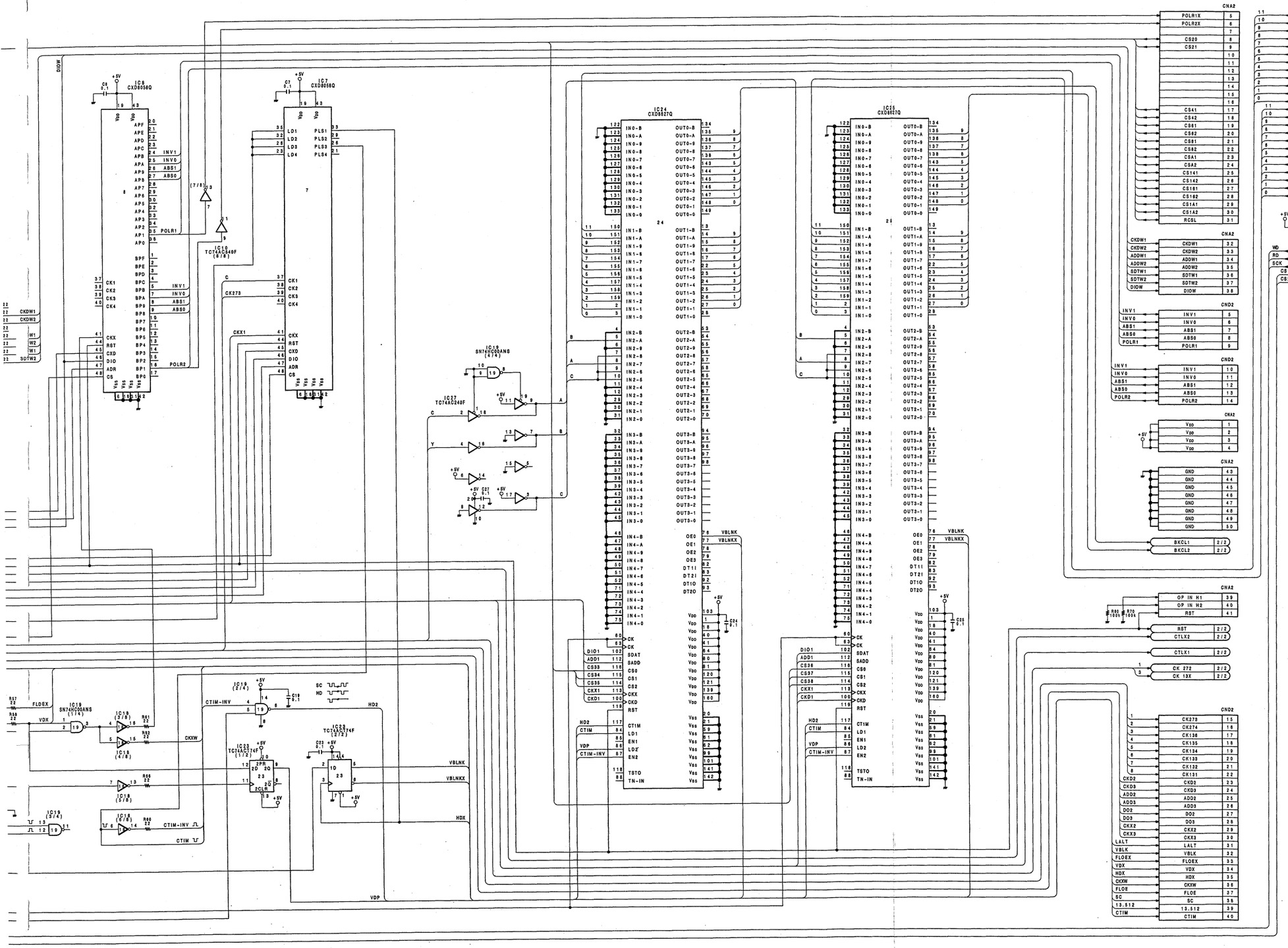

MAT-4 BOARD (1/2)

BOARD NO.1-646-030-11
DVS-6000/6000C

MAT-4(2/2);MATTE GENERATOR BOARD

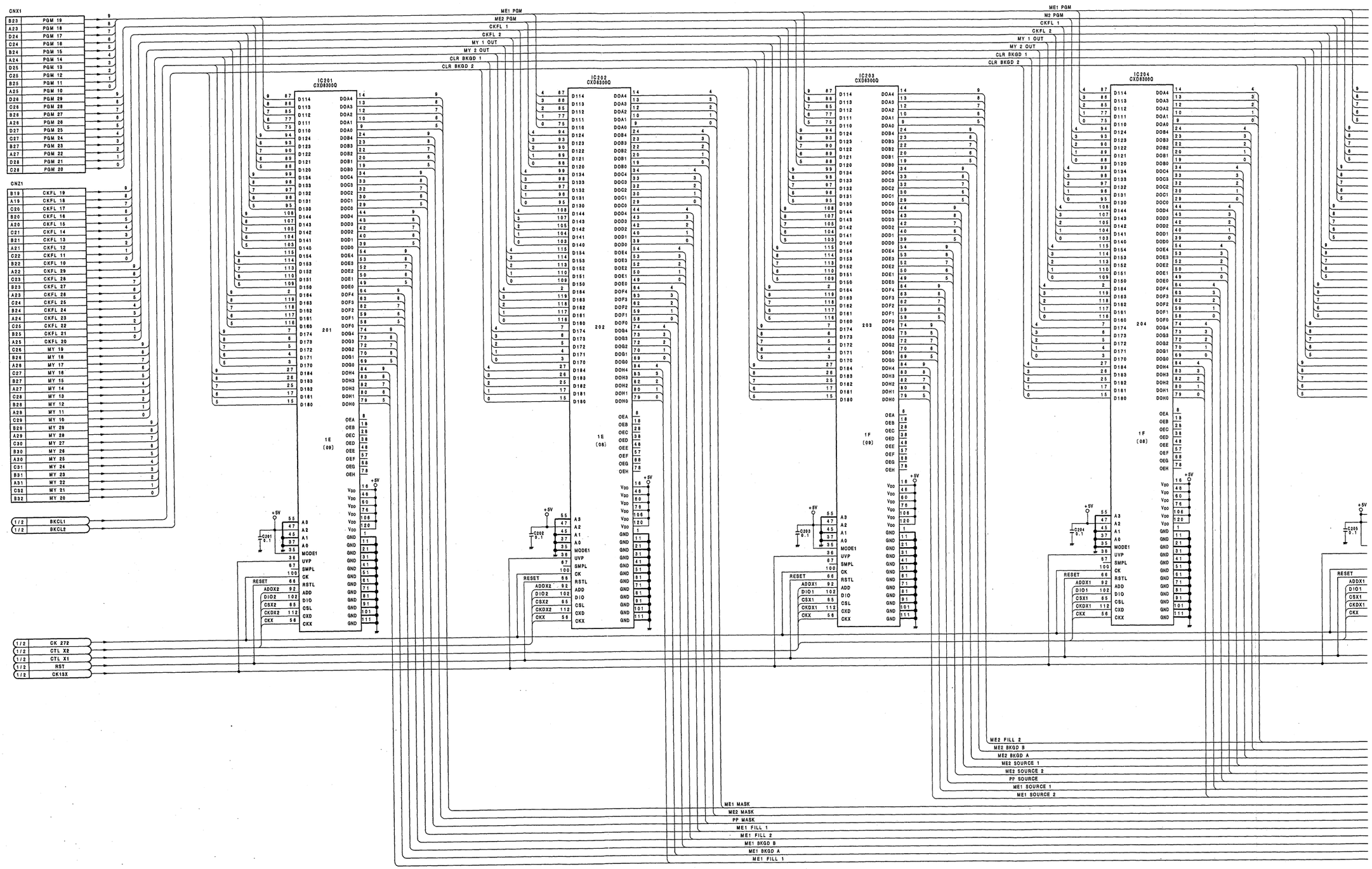

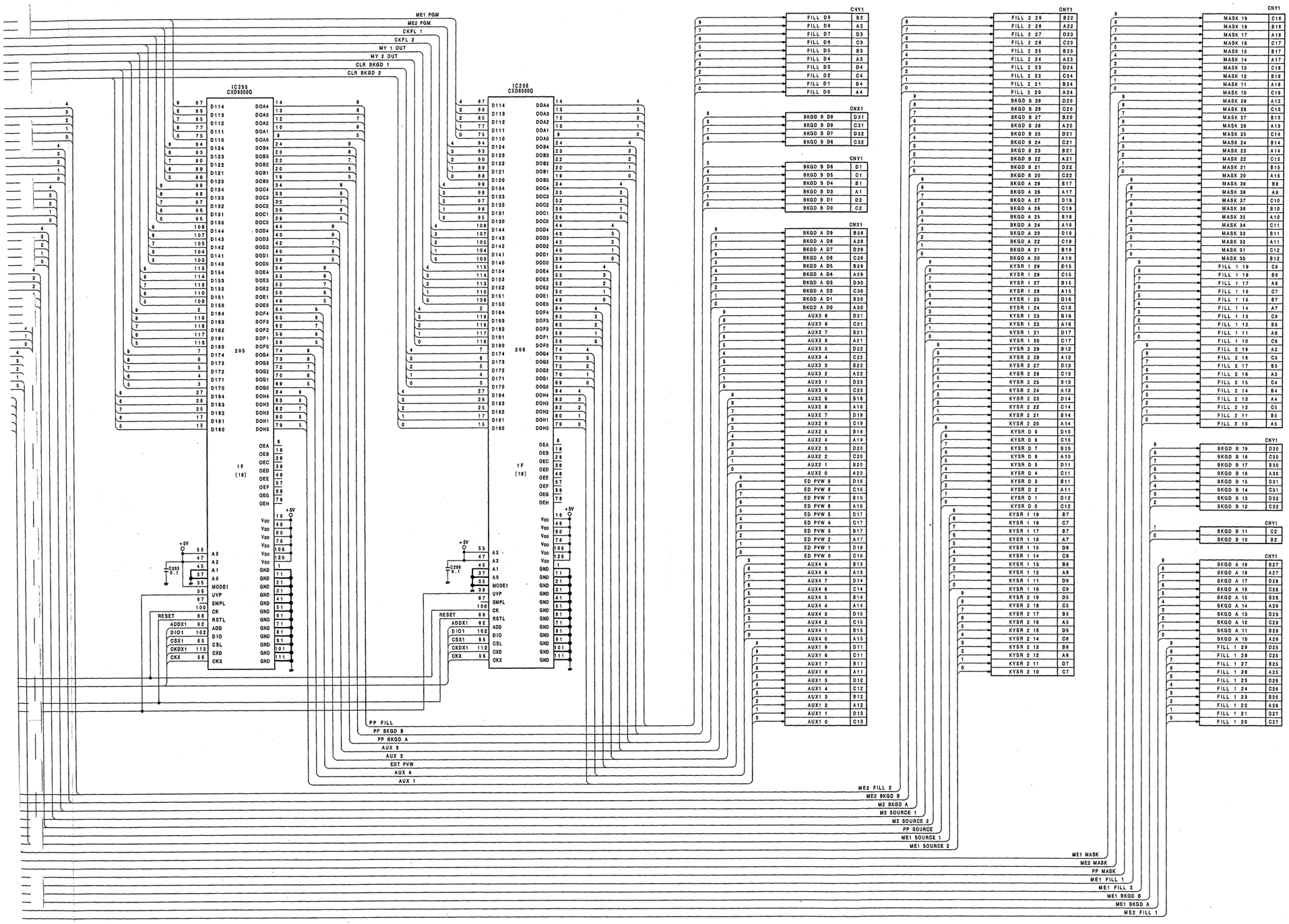

MAT-4 BOARD (2/2)

BOARD NO.1-646-030-11
DVS-6000/6000C

MT-90(BKDS-6072);BKGD COLOR MIX GENERATOR BOARD

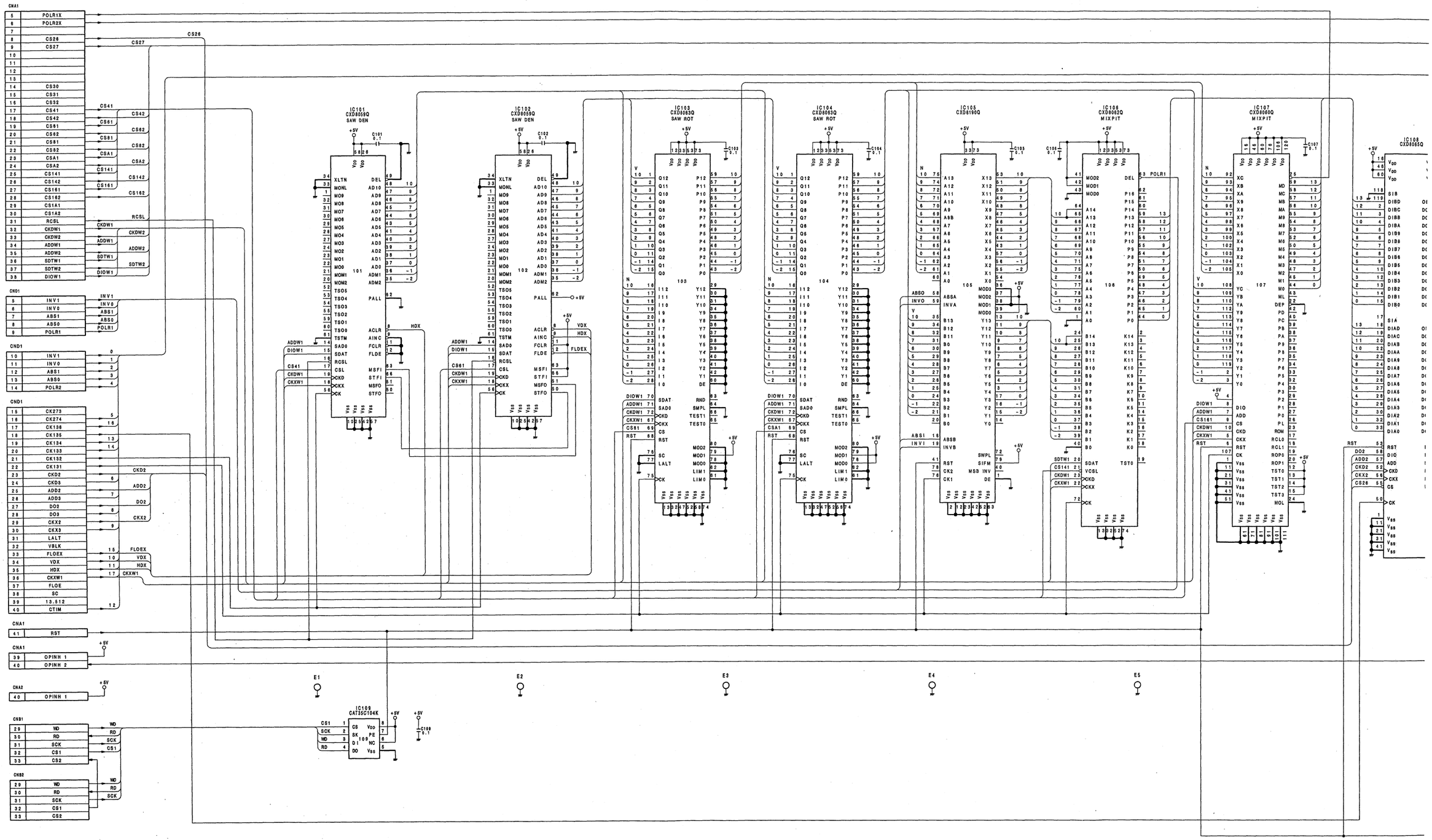

A | B | C | D | E | F | G | H

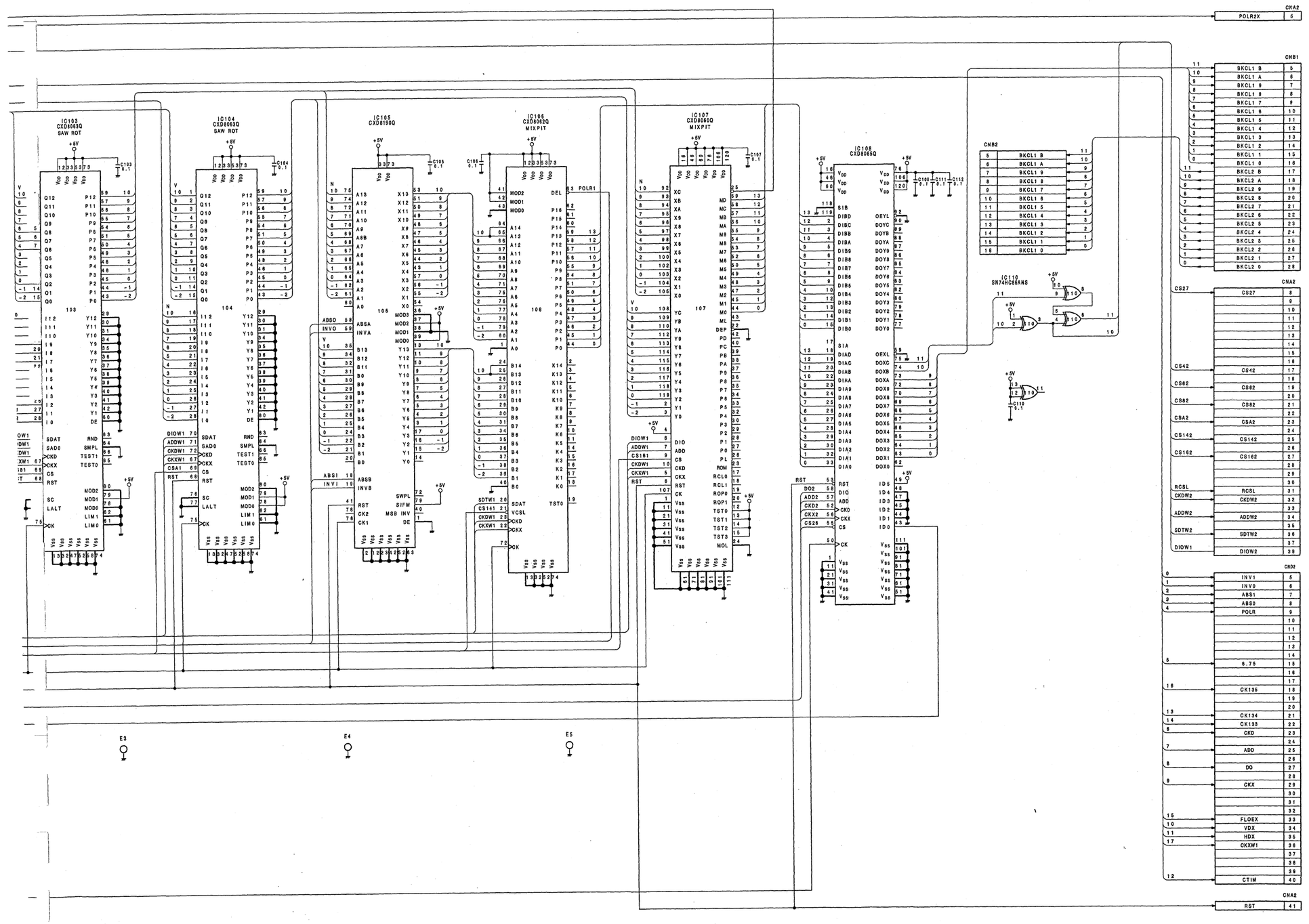

MT-90 BOARD

BOARD NO.1-644-041-11
BKDS-6072

XPT-3(1/3)(BKDS-8022);DIGITAL INPUT BOARD

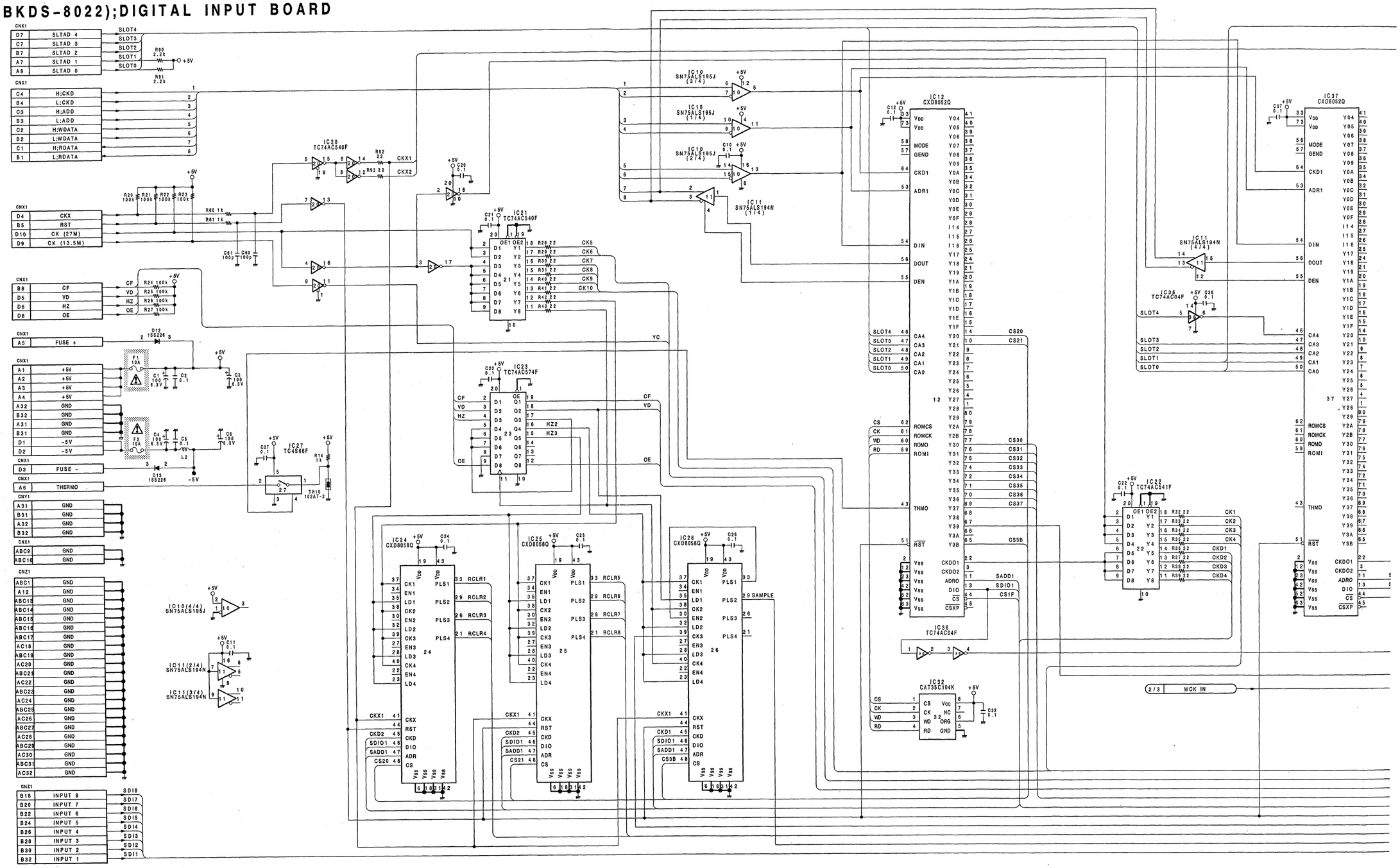

BKDS-8022 XPT-3(1/3)

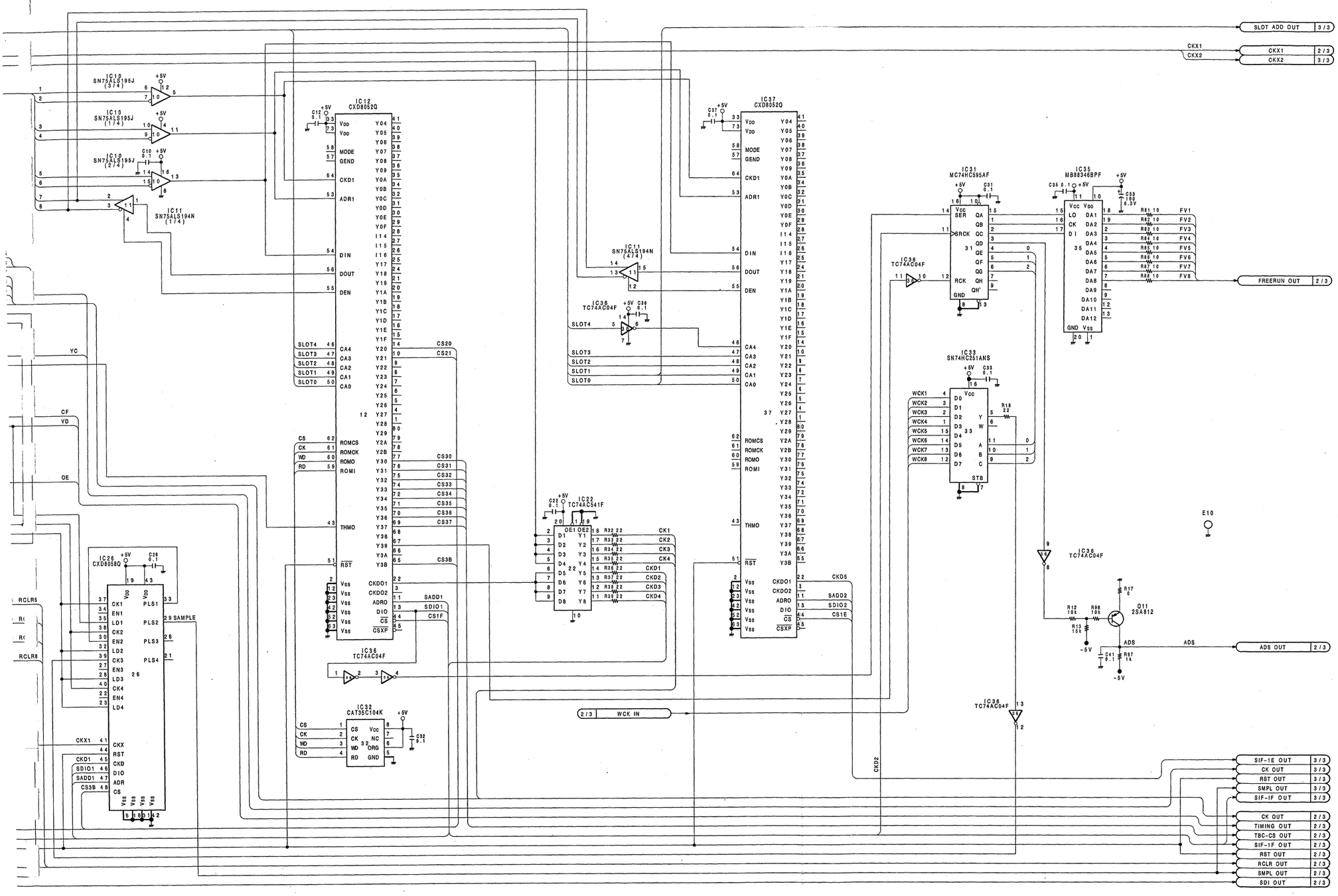

XPT-3 BOARD (1/3)

BOARD NO.1-641-009-11
BKDS-8022

XPT-3(2/3)(BKDS-8022);DIGITAL INPUT BOARD

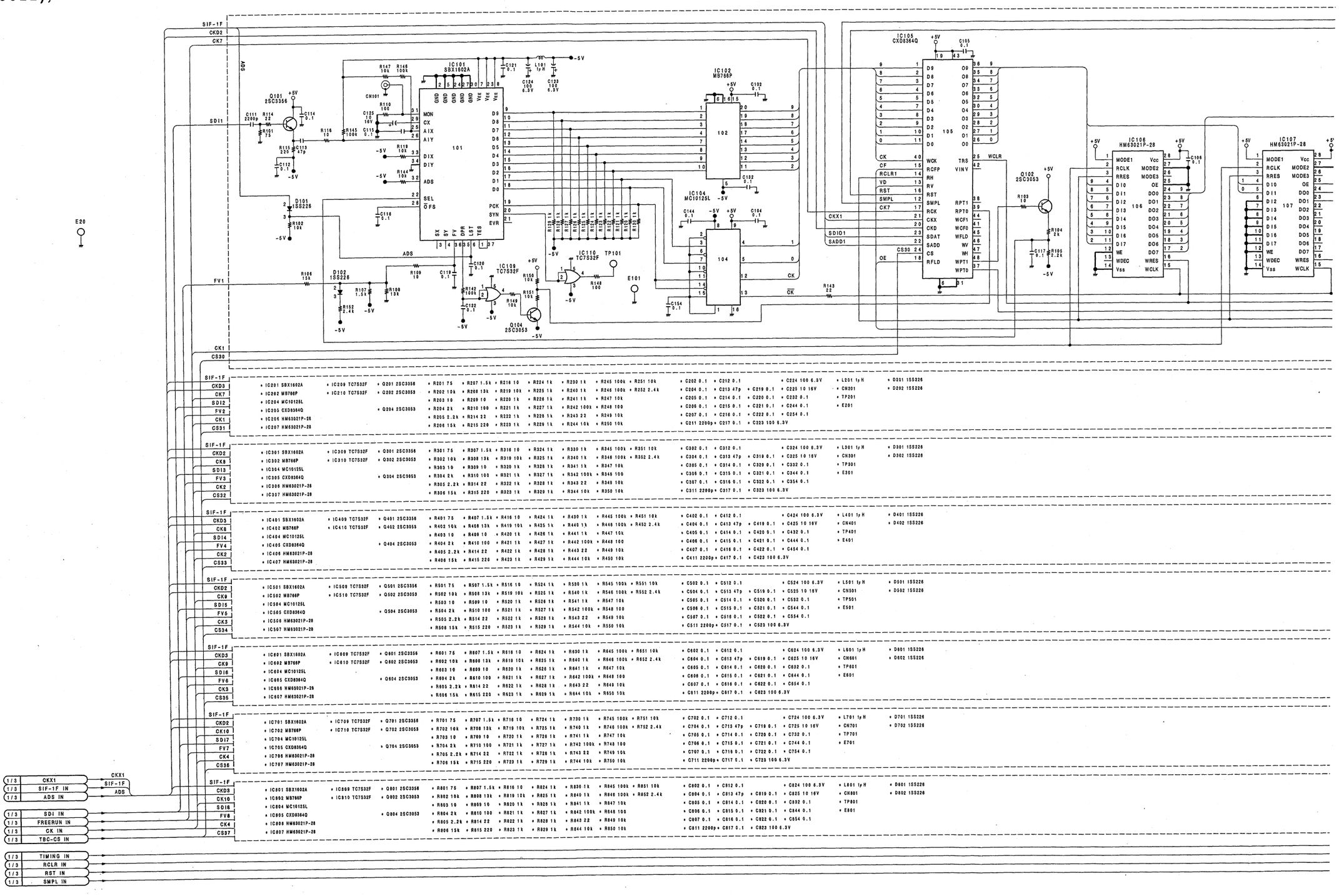

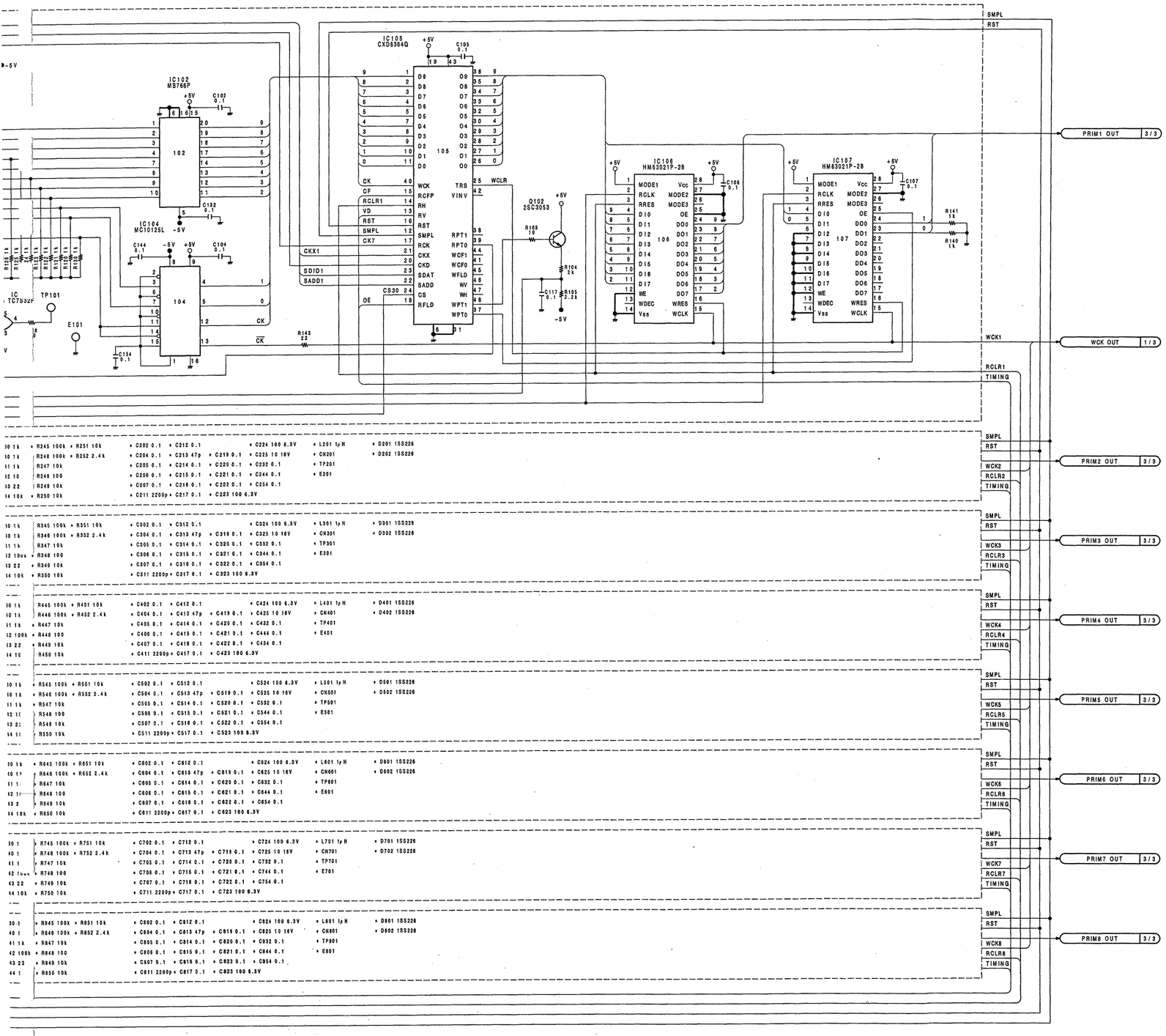

XPT-3 BOARD (2/3)

BOARD NO.1-641-009-11
BKDS-8022

XPT-3(3/3)(BKDS-8022);DIGITAL INPUT BOARD

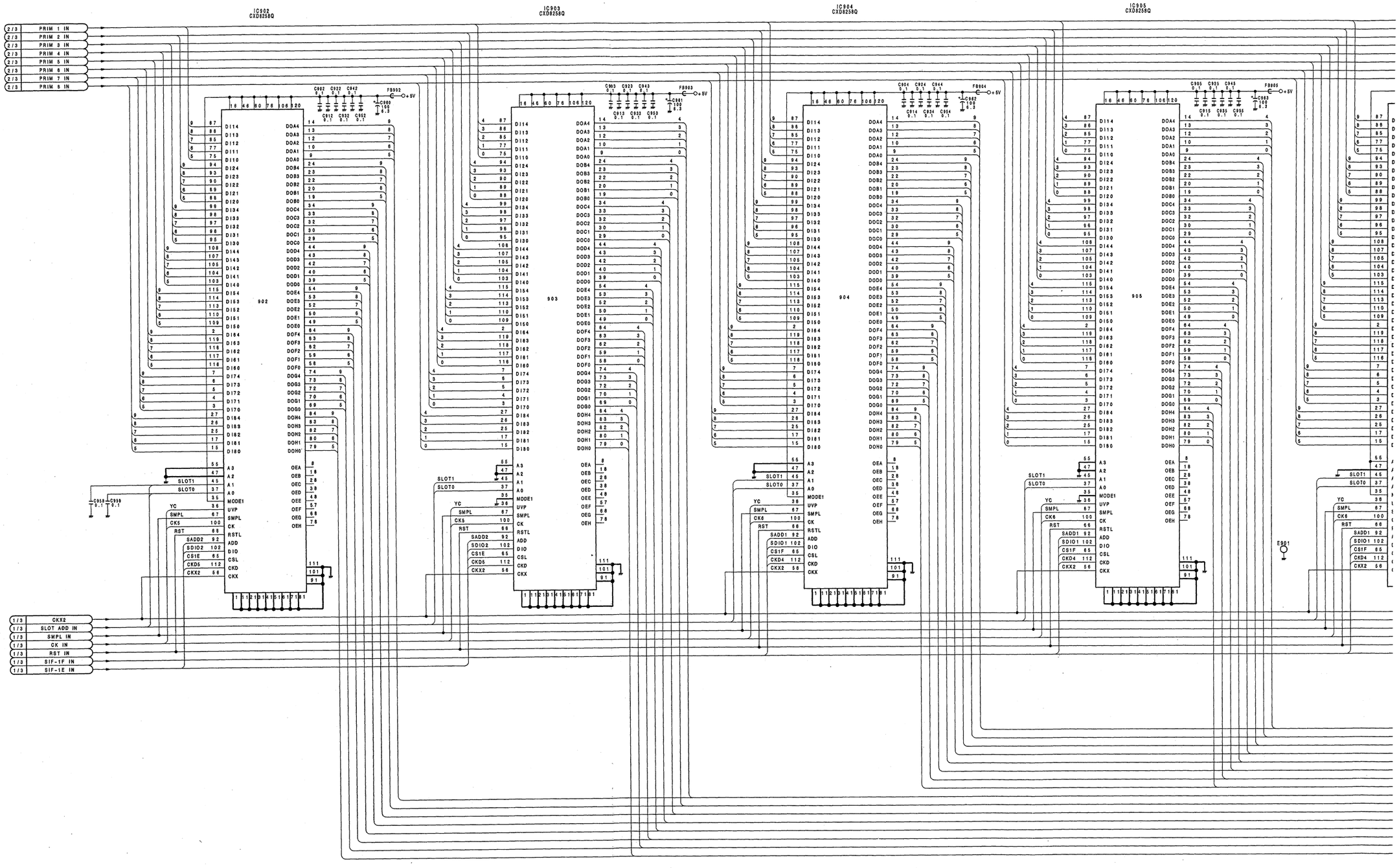

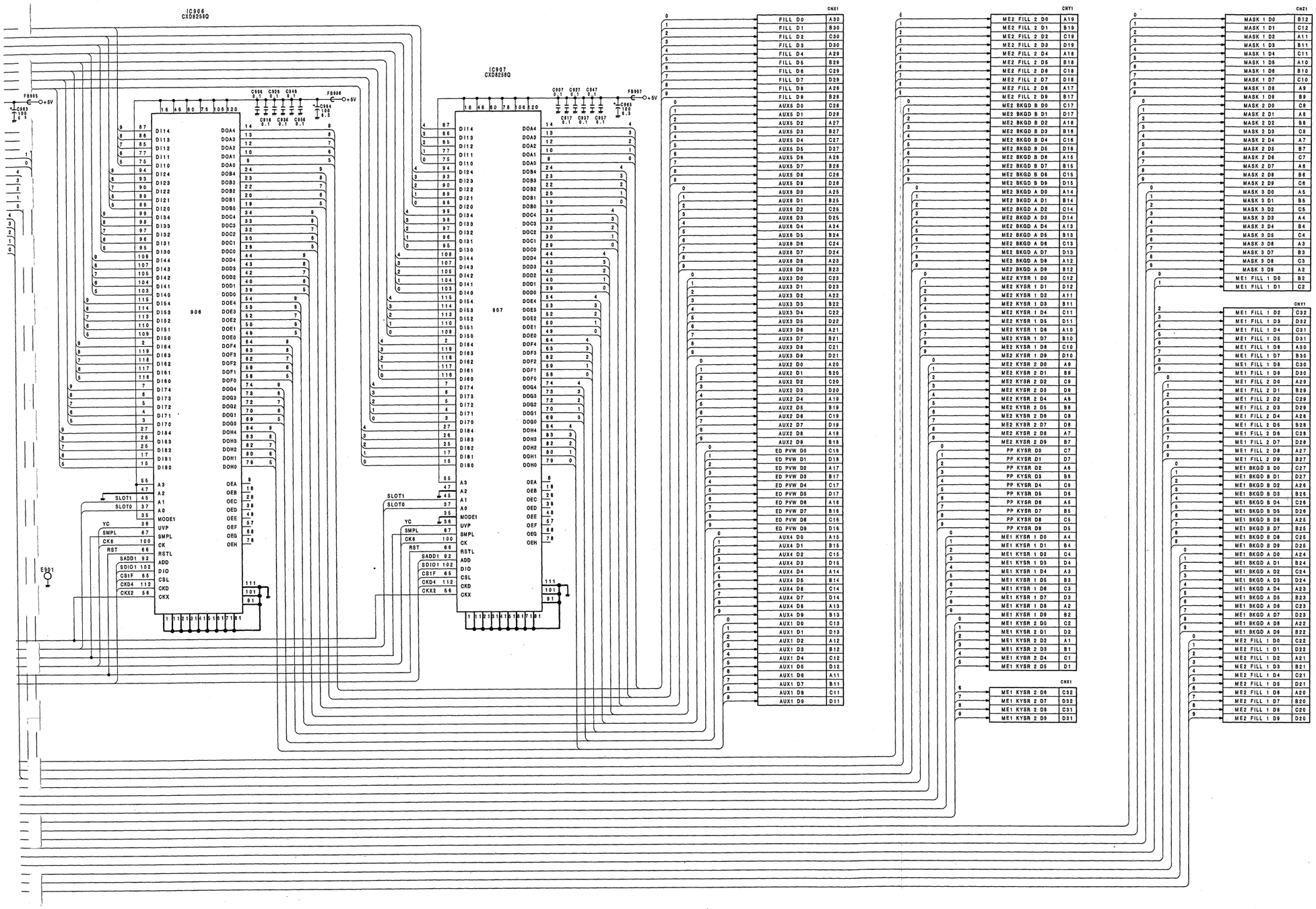

XPT-3 BOARD (3/3)

BOARD NO.1-641-009-11
BKDS-8022

CN-311;OUTPUT CONNECTOR BOARD
CN-503;CHROMA KEY INPUT CONNECTOR BOARD:DVS-6000 ONLY

CN-311 ASSY (DVS-6000 ONLY)

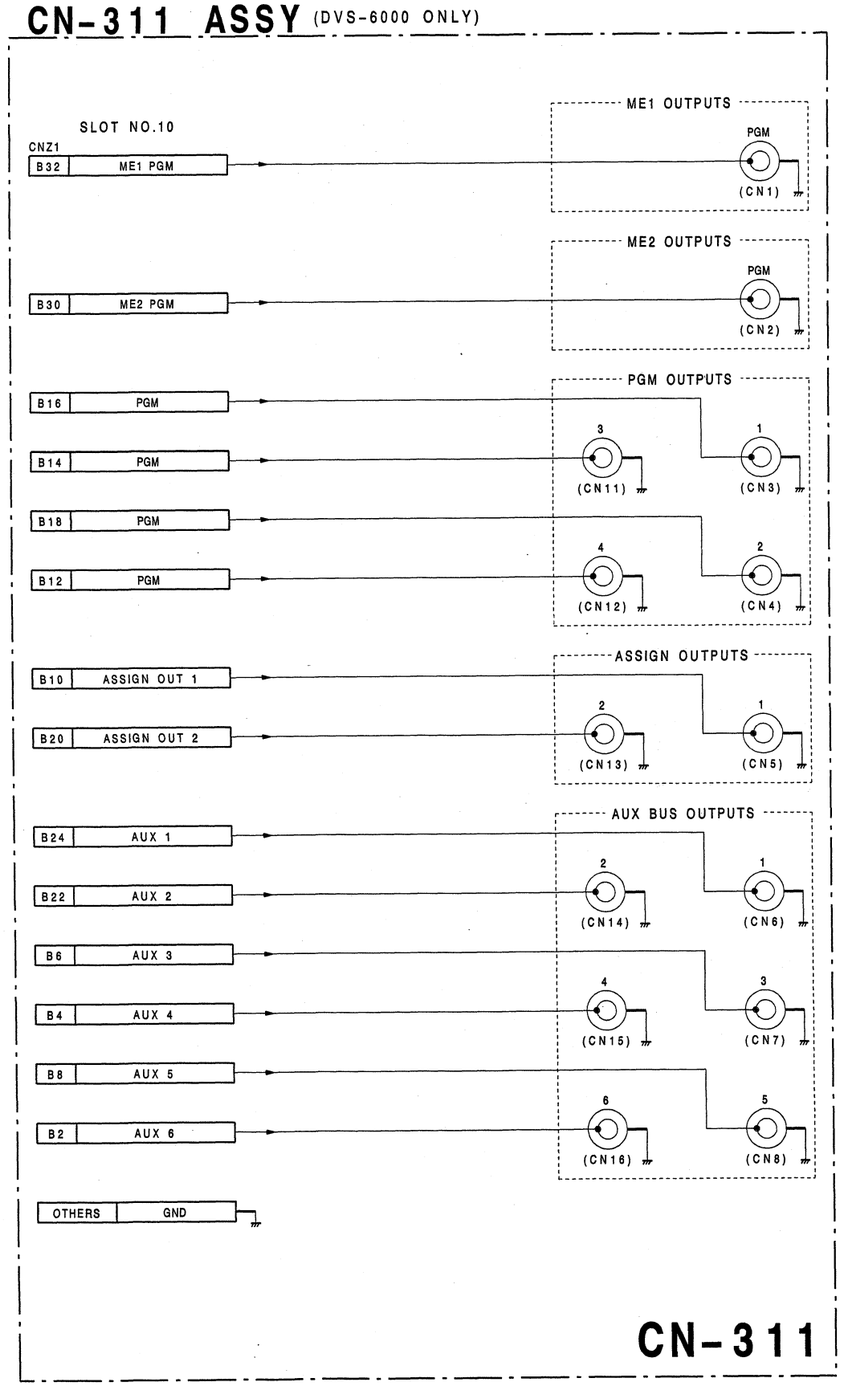

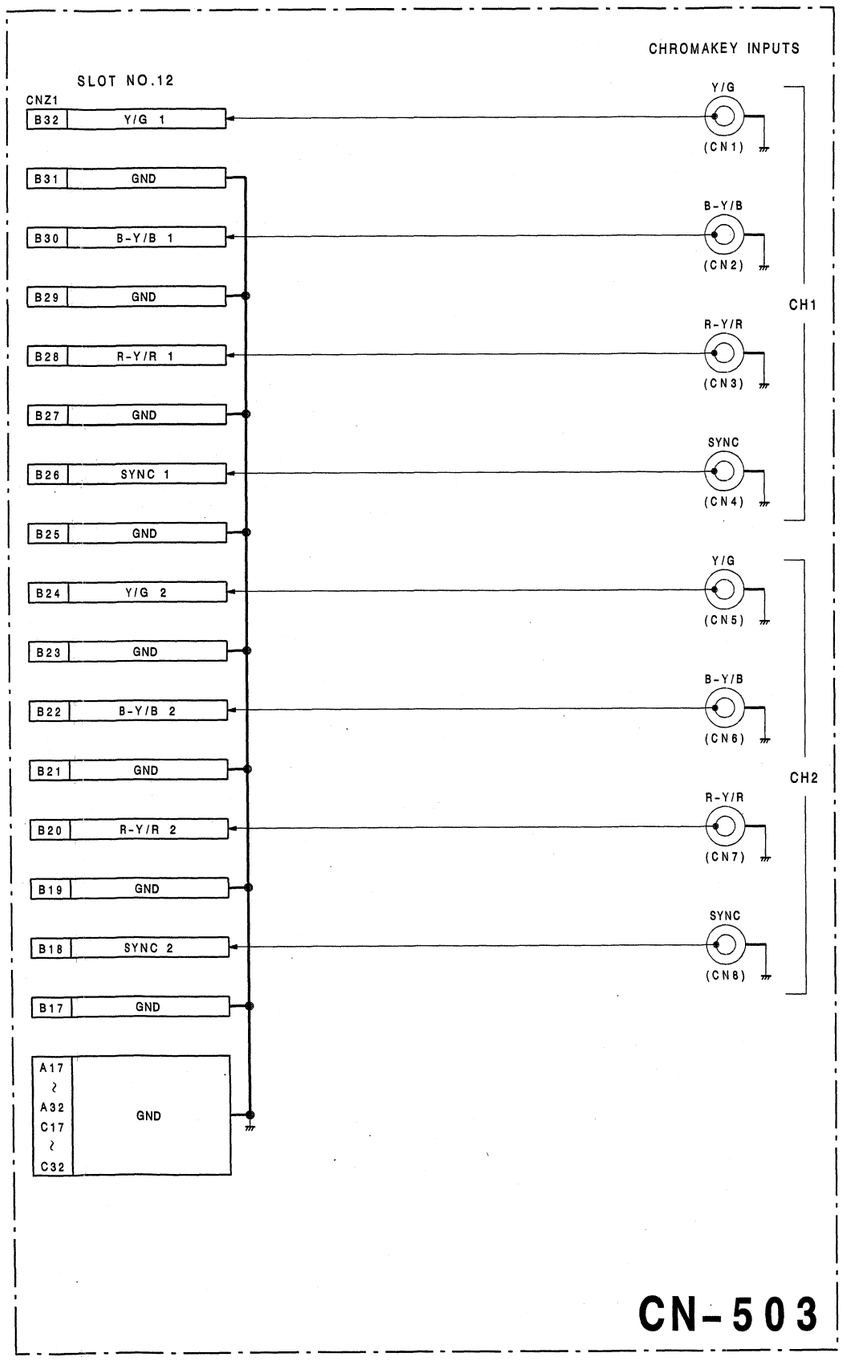

CN-311 BOARD
BOARD NO.1-636-518-12
DVS-6000/6000C

CN-503 BOARD
BOARD NO.1-636-521-12
DVS-6000

3-83

CN-312(A,B);PRIMARY INPUT CONNECTOR BOARD

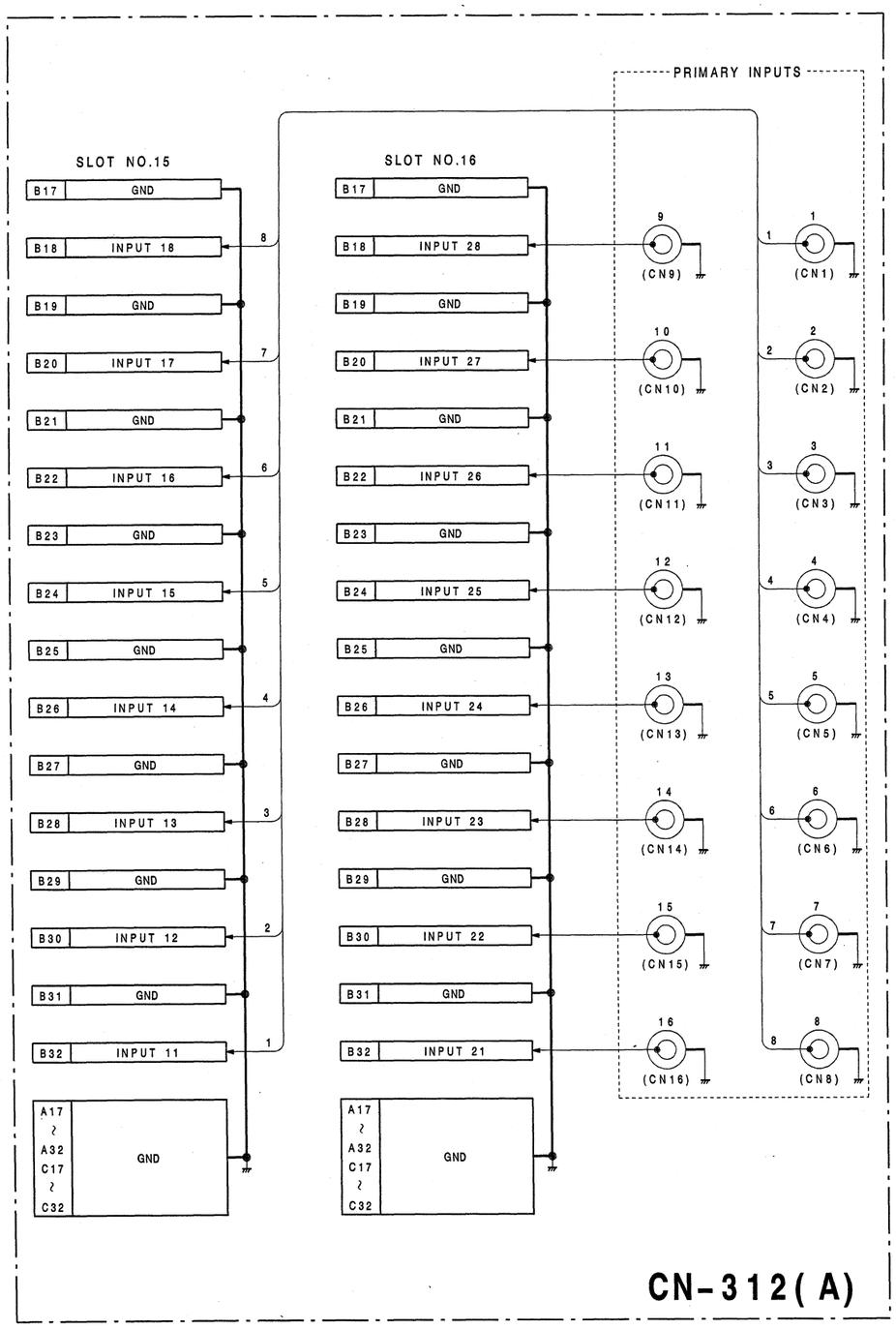

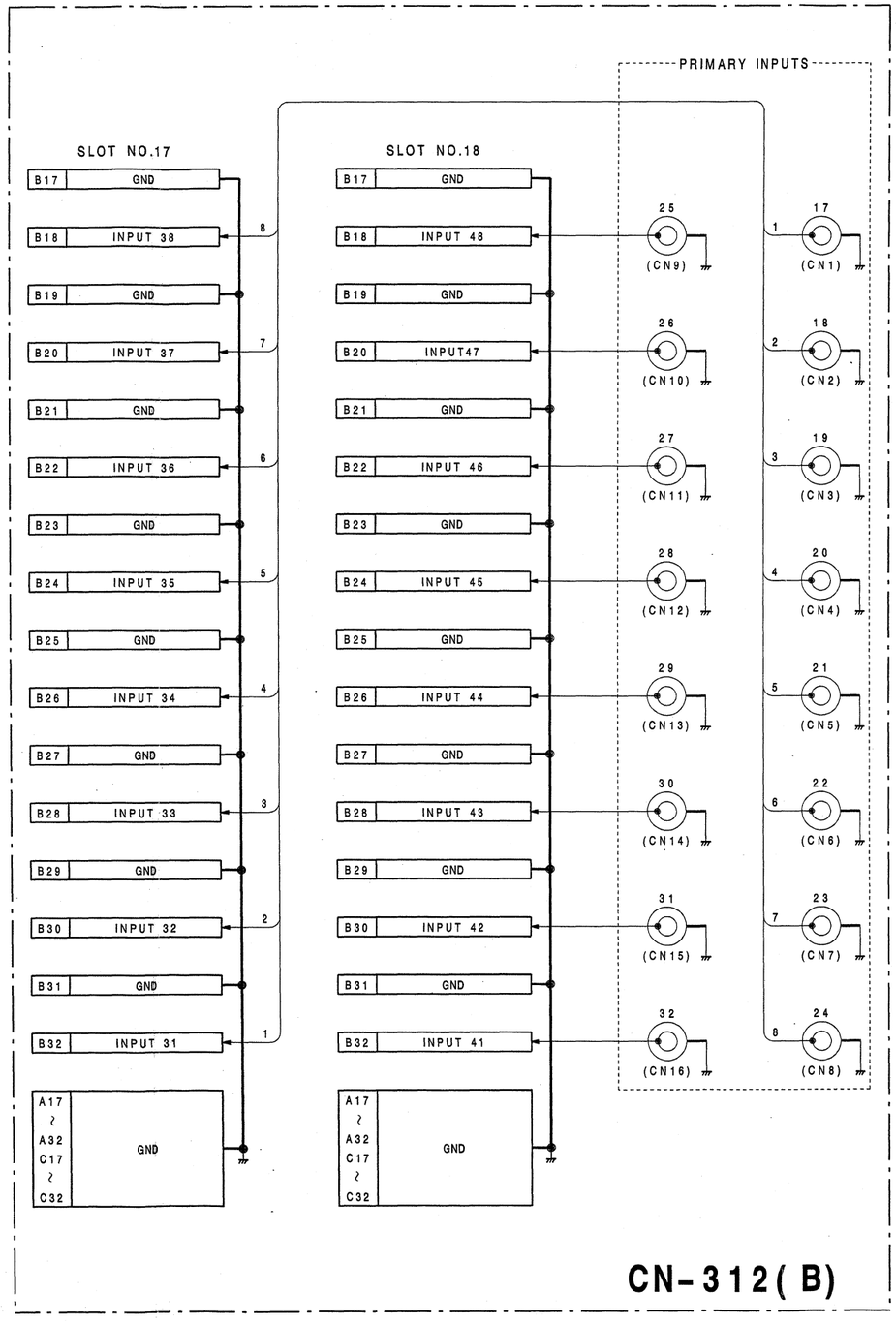

CN-312(A) BOARD
BOARD NO.1-636-520-12
DVS-6000/6000C

CN-312(B) BOARD
BOARD NO.1-636-520-12
DVS-6000/6000C

CN-843;CONTROL CONNECTOR BOARD

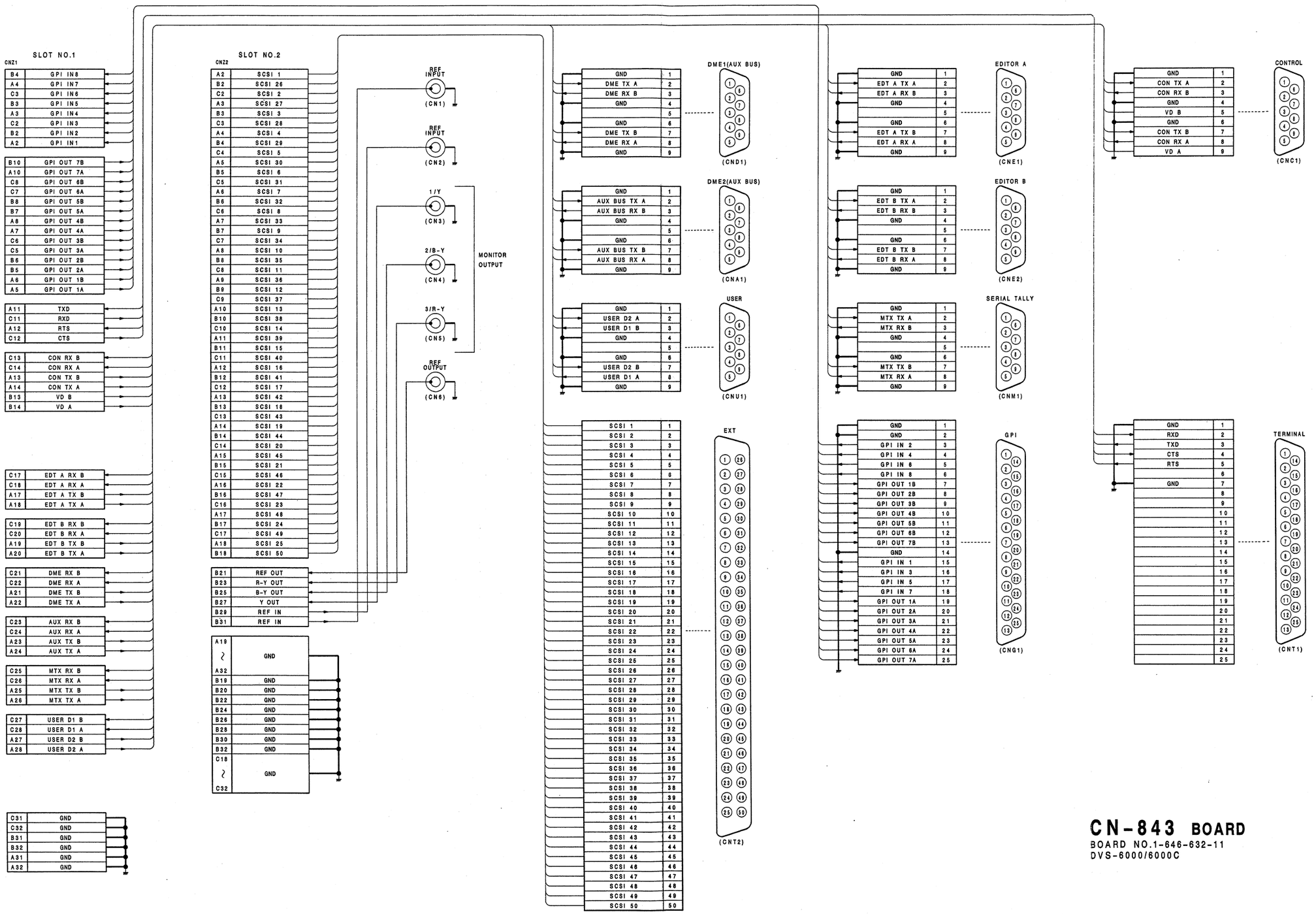

CN-843 BOARD

BOARD NO.1-646-632-11
DVS-6000/6000C

MB-482(1/8);MOTHER BOARD

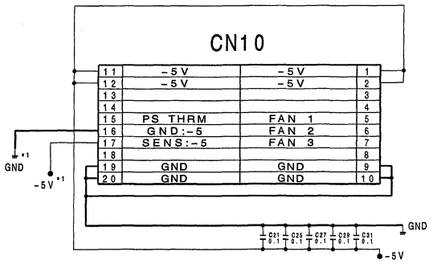

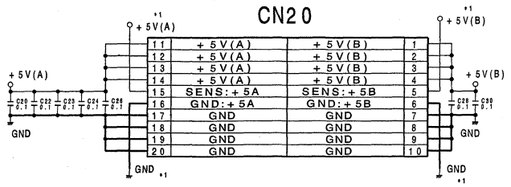

*1:SPECIAL PATTERN

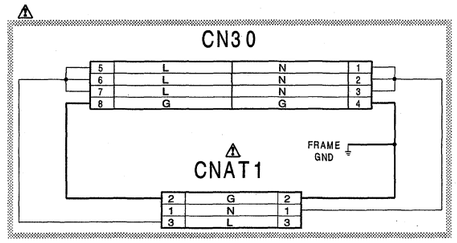

(08)

CPU-147

	A	B	C	D
1	+5V(A)	RDATA : L	RDATA : H	-5V
2	+5V(A)	WDATA : L	WDATA : H	-5V
3	+5V(A)	ADD : L	ADD : H	FUSE -
4	+5V(A)	CKD : L	CKD : H	CKX
5	FUSE +	RST	LALT	VD
6	THERMO	SC	HBLK	HZ
7	GND(SLTAD 1)	GND(SLTAD 2)	(SLTAD 3)	GND(SLTAD 4)
8	GND(SLTAD 0)	CF	FAN 1	OE
9			FAN 2	
10		PS THRM	FAN 3	
11				
12				
13	D1/D2	525/625	REF EXT	CKX CPU
14				HD
15				VZ
16	+5V(B)	DIG/ANA	ADV/DLY	CF IN
17	BB/SYNC			
18				
19				
20				
21				
22				
23				
24				
25				
26				
27				
28				
29				
30				
31	GND	GND		
32	GND	GND		

	A	B	C	D
1				
2				
3				
4				
5				
6				
7				
8				
9				
10				
11				
12	BUSY : L	SCSI-INT : L		
13	SD4	SD5	SD6	SD7
14	SD0	SD1	SD2	SD3
15	SA8	SA9	SA10	SCSI-CS : L
16	SA4	SA5	SA6	SA7
17	SA0	SA1	SA2	SA3
18			RD : L	WR : L
19				
20				
21				
22				
23				
24				
25				
26				
27				
28				
29				
30	TXD	RXD	RTS	CTS
31	GND	GND		
32	GND	GND		

	A	B	C
1	GND	GND	GND
2	GPI IN 1	GPI IN 2	GPI IN 3
3	GPI IN 4	GPI IN 5	GPI IN 6
4	GPI IN 7	GPI IN 8	
5	GPI OUT 1A	GPI OUT 2A	GPI OUT 3A
6	GPI OUT 1B	GPI OUT 2B	GPI OUT 3B
7	GPI OUT 4A	GPI OUT 5A	GPI OUT 6A
8	GPI OUT 4B	GPI OUT 5B	GPI OUT 6B
9	GPI OUT 7A		
10	GPI OUT 7B		
11	TXD		RXD
12	RTS		CTS
13	CON TX B	VD B	CON RX B
14	CON TX A	VD A	CON RX A
15	FDD TX B		FDD RX B
16	FDD TX A		FDD RX A
17	EDT A TX B		EDT A RX B
18	EDT A TX A		EDT A RX A
19	EDT B TX B		EDT B RX B
20	EDT B TX A		EDT B RX A
21	DME TX B		DME RX B
22	DME TX A		DME RX A
23	AUX TX B		AUX RX B
24	AUX TX A		AUX RX A
25	MTX TX B		MTX RX B
26	MTX TX A		MTX RX A
27	USER D2 B		USER D1 B
28	USER D2 A		USER D1 A
29	SPARE D2 B		SPARE D1 B
30	SPARE D2 A		SPARE D1 A
31	GND	GND	GND
32	GND	GND	GND

1

CPU

(09)

SG-210(D2/ DVS-6000)
SG-211(D1/ DVS-6000C)

	A	B	C	D
1	+5V(A)	RDATA : L	RDATA : H	-5V
2	+5V(A)	WDATA : L	WDATA : H	-5V
3	+5V(A)	ADD : L	ADD : H	FUSE -
4	+5V(A)	CKD : L	CKD : H	CKX
5	FUSE +	RST	LALT	VD
6	THERMO	SC	HBLK	HZ
7	GND(SLTAD 1)	GND(SLTAD 2)	(SLTAD 3)	GND(SLTAD 4)
8	(SLTAD 0)	CF	VBLK	OE
9	CK16(13.5M)	CK15(13.5M)	CK14(13.5M)	CK13(13.5M)
10	CK12(13.5M)	CK11(13.5M)	CK10(13.5M)	CK9(13.5M)
11	CK4(27.0M)	CK3(27.0M)	CK2(27.0M)	CK1(27.0M)
12	CK8(27.0M)	CK7(27.0M)	CK6(27.0M)	CK5(27.0M)
13	D1/D2	525/625	REF EXT	CKX CPU
14	GND	GND	GND	HD
15	GND	GND	GND	VZ
16	+5V(B)	DIG/ANA	ADV/DLY	CF IN
17	BB/SYNC			
18				
19				
20				
21				
22				
23				
24				
25				
26	SFB16	SFB17	SFB18	SFB19
27	SFB12	SFB13	SFB14	SFB15
28	SFB8	SFB9	SFB10	SFB11
29	SFB4	SFB5	SFB6	SFB7
30	SFB0	SFB1	SFB2	SFB3
31	GND	GND		
32	GND	GND		

X

	A	B	C	D
1				
2				
3				
4				
5				
6				
7				
8				
9				
10				
11				
12	BUSY : L	SCSI-INT : L		
13	SD4	SD5	SD6	SD7
14	SD0	SD1	SD2	SD3
15	SA8	SA9	SA10	SCSI-CS : L
16	SA4	SA5	SA6	SA7
17	SA0	SA1	SA2	SA3
18	BB 8	BB 9	RD : L	WR : L
19	BB 6	BB 7		
20	BB 4	BB 5		
21	BB 2	BB 3		
22	BB 0	BB 1		
23	PVW OUT 8	PVW OUT 9		
24	PVW OUT 6	PVW OUT 7		
25	PVW OUT 4	PVW OUT 5		
26	PVW OUT 2	PVW OUT 3		
27	PVW OUT 0	PVW OUT 1		
28				
29				
30	TXD	RXD	RTS	CTS
31	GND	GND		
32	GND	GND		

Y

	A	B	C
1	GND	GND	GND
2	SCSI 1	SCSI 26	SCSI 2
3	SCSI 27	SCSI 3	SCSI 28
4	SCSI 4	SCSI 29	SCSI 5
5	SCSI 30	SCSI 6	SCSI 31
6	SCSI 7	SCSI 32	SCSI 8
7	SCSI 33	SCSI 9	SCSI 34
8	SCSI 10	SCSI 35	SCSI 11
9	SCSI 36	SCSI 12	SCSI 37
10	SCSI 13	SCSI 38	SCSI 14
11	SCSI 39	SCSI 15	SCSI 40
12	SCSI 16	SCSI 41	SCSI 17
13	SCSI 42	SCSI 18	SCSI 43
14	SCSI 19	SCSI 44	SCSI 20
15	SCSI 45	SCSI 21	SCSI 46
16	SCSI 22	SCSI 47	SCSI 23
17	SCSI 48	SCSI 24	SCSI 49
18	SCSI 25	SCSI 50	GND
19	GND	GND	GND
20	GND	GND	GND
21	GND	REF OUT	GND
22	GND	GND	GND
23	GND	R-Y OUT	GND
24	GND	GND	GND
25	GND	B-Y OUT	GND
26	GND	GND	GND
27	GND	Y OUT	GND
28	GND	GND	GND
29	GND	REF IN	GND
30	GND	GND	GND
31	GND	REF IN	GND
32	GND	GND	GND

Z

2

SG

(10)

	A	B	C	
1	+5V(A)	RDATA : L	RDATA : H	
2	+5V(A)	WDATA : L	WDATA : H	
3	+5V(A)	ADD : L	ADD : H	F
4	+5V(A)	CKD : L	CKD : H	
5	FUSE +	RST	LALT	
6	THERMO	SC	HBLK	
7	GND(SLTAD 1)	GND(SLTAD 2)	GND(SLTAD 3)	(
8	GND(SLTAD 0)	CF	VBLK	
9	GND	GND	GND	CK
10	GND	GND	GND	CK
11				
12				
13				
14				
15				
16				
17				
18				
19				
20				
21	LSLD 110	LSLD 111	LSLD 112	LS
22	LSLD 16	LSLD 17	LSLD 18	L
23	LSLD 12	LSLD 13	LSLD 14	L
24	LSLD 212	LSLD 213	LSLD 10	L
25	LSLD 28	LSLD 29	LSLD 210	LS
26	LSLD 24	LSLD 25	LSLD 26	L
27	LSLD 20	LSLD 21	LSLD 22	L
28	LSLD 310	LSLD 311	LSLD 312	LS
29	LSLD 36	LSLD 37	LSLD 38	L
30	LSLD 32	LSLD 33	LSLD 34	L
31	GND	GND	LSLD 30	L
32	GND	GND		

	A	B	C	
1				
2				
3				
4				
5				
6				
7				
8	WSLD 112	WSLD 113		
9	WSLD 18	WSLD 19	WSLD 110	W
10	WSLD 14	WSLD 15	WSLD 16	W
11	WSLD 10	WSLD 11	WSLD 12	W
12	WSLD 210	WSLD 211	WSLD 212	W
13	WSLD 26	WSLD 27	WSLD 28	W
14	WSLD 22	WSLD 23	WSLD 24	W
15	WSLD 312	WSLD 313	WSLD 20	W
16	WSLD 38	WSLD 39	WSLD 310	W
17	WSLD 34	WSLD 35	WSLD 36	W
18	WSLD 30	WSLD 31	WSLD 32	W
19				
20				
21				
22				
23				
24				
25				
26				
27				
28				
29				
30				
31	GND	GND		W
32	GND	GND		

	A	B	C
1			
2			
3			
4			
5			
6			
7			
8			
9			
10			
11			
12			
13			
14			
15			
16			
17			
18			
19			
20			
21			
22			
23			
24			
25			
26			
27			
28			
29			
30			
31			
32			

3

A | B | C | D | E | F | G | H

MB-482(1/8)

(08)

I-147

	C	D
L	RDATA : H	-5V
L	WDATA : H	-5V
L	ADD : H	FUSE -
L	CKD : H	CKX
	LALT	VD
	HBLK	HZ
D 2)	(SLTAD 3)	GND(SLTAD 4)
	FAN 1	OE
	FAN 2	
M	FAN 3	
5	REF EXT	CKX CPU
		HD
		VZ
A	ADV/DLY	CF IN

	C	D
	SD6	SD7
	SD2	SD3
	SA10	SCSI-CS : L
	SA6	SA7
	SA2	SA3
	RD : L	WR : L
	RTS	CTS

	C
	GND
2	GPI IN 3
5	GPI IN 6
8	
2A	GPI OUT 3A
2E	GPI OUT 3B
5A	GPI OUT 6A
5B	GPI OUT 6B
	RXD
	CTS
	CON RX B
	CON RX A
	FDD RX B
	FDD RX A
	EDT A RX B
	EDT A RX A
	EDT B RX B
	EDT B RX A
	DME RX B
	DME RX A
	AUX RX B
	AUX RX A
	MTX RX B
	MTX RX A
	USER D1 B
	USER D1 A
	SPARE D1 B
	SPARE D1 A
	GND
	GND

(09)

SG-210(D2/ DVS-6000)
SG-211(D1/ DVS-6000C)

	A	B	C	D
1	+ 5V(A)	RDATA : L	RDATA : H	-5V
2	+ 5V(A)	WDATA : L	WDATA : H	-5V
3	+ 5V(A)	ADD : L	ADD : H	FUSE -
4	+ 5V(A)	CKD : L	CKD : H	CKX
5	FUSE +	RST	LALT	VD
6	THERMO	SC	HBLK	HZ
7	GND(SLTAD 1)	GND(SLTAD 2)	(SLTAD 3)	GND(SLTAD 4)
8	(SLTAD 0)	CF	VBLK	OE
9	CK16(13.5M)	CK15(13.5M)	CK14(13.5M)	CK13(13.5M)
10	CK12(13.5M)	CK11(13.5M)	CK10(13.5M)	CK9(13.5M)
11	CK4(27.0M)	CK3(27.0M)	CK2(27.0M)	CK1(27.0M)
12	CK8(27.0M)	CK7(27.0M)	CK6(27.0M)	CK5(27.0M)
13	D1/D2	525/625	REF EXT	CKX CPU
14	GND	GND	GND	HD
15	GND	GND	GND	VZ
16	+ 5V(B)	DIG/ANA	ADV/DLY	CF IN
17	BB/SYNC			
18				
19				
20				
21				
22				
23				
24				
25				
26	SFB16	SFB17	SFB18	SFB19
27	SFB12	SFB13	SFB14	SFB15
28	SFB8	SFB9	SFB10	SFB11
29	SFB4	SFB5	SFB6	SFB7
30	SFB0	SFB1	SFB2	SFB3
31	GND	GND		
32	GND	GND		

	A	B	C	D
1				
2				
3				
4				
5				
6				
7				
8	WSLD 112	WSLD 113		
9	WSLD 18	WSLD 19	WSLD 110	WSLD 111
10	WSLD 14	WSLD 15	WSLD 16	WSLD 17
11	WSLD 10	WSLD 11	WSLD 12	WSLD 13
12	BUSY : L	SCSI-INT : L		
13	SD4	SD5	SD6	SD7
14	SD0	SD1	SD2	SD3
15	SA8	SA9	SA10	SCSI-CS : L
16	SA4	SA5	SA6	SA7
17	SA0	SA1	SA2	SA3
18	BB 8	BB 9	RD : L	WR : L
19	BB 6	BB 7		
20	BB 4	BB 5		
21	BB 2	BB 3		
22	BB 0	BB 1		
23	PVW OUT 8	PVW OUT 9		
24	PVW OUT 6	PVW OUT 7		
25	PVW OUT 4	PVW OUT 5		
26	PVW OUT 2	PVW OUT 3		
27	PVW OUT 0	PVW OUT 1		
28				
29				
30	TXD	RXD	RTS	CTS
31	GND	GND		
32	GND	GND		

	A	B	C
1	GND	GND	GND
2	SCSI 1	SCSI 26	SCSI 2
3	SCSI 27	SCSI 3	SCSI 28
4	SCSI 4	SCSI 29	SCSI 5
5	SCSI 30	SCSI 6	SCSI 31
6	SCSI 7	SCSI 32	SCSI 8
7	SCSI 33	SCSI 9	SCSI 34
8	SCSI 10	SCSI 35	SCSI 11
9	SCSI 36	SCSI 12	SCSI 37
10	SCSI 13	SCSI 38	SCSI 14
11	SCSI 39	SCSI 15	SCSI 40
12	SCSI 16	SCSI 41	SCSI 17
13	SCSI 42	SCSI 18	SCSI 43
14	SCSI 19	SCSI 44	SCSI 20
15	SCSI 45	SCSI 21	SCSI 46
16	SCSI 22	SCSI 47	SCSI 23
17	SCSI 48	SCSI 24	SCSI 49
18	SCSI 25	SCSI 50	GND
19	GND	GND	GND
20	GND	GND	GND
21	GND	REF OUT	GND
22	GND	GND	GND
23	GND	R-Y OUT	GND
24	GND	GND	GND
25	GND	B-Y OUT	GND
26	GND	GND	GND
27	GND	Y OUT	GND
28	GND	GND	GND
29	GND	REF IN	GND
30	GND	GND	GND
31	GND	REF IN	GND
32	GND	GND	GND

2

SG

(10)

	A	B	C	D
1	+ 5V(A)	RDATA : L	RDATA : H	-5V
2	+ 5V(A)	WDATA : L	WDATA : H	-5V
3	+ 5V(A)	ADD : L	ADD : H	FUSE -
4	+ 5V(A)	CKD : L	CKD : H	CKX
5	FUSE +	RST	LALT	VD
6	THERMO	SC	HBLK	HZ
7	GND(SLTAD 1)	GND(SLTAD 2)	GND(SLTAD 3)	(SLTAD 4)
8	GND(SLTAD 0)	CF	VBLK	OE
9	GND	GND	GND	CK9(13.5M)
10	GND	GND	GND	CK1(27.0M)
11				
12				
13				
14				
15				
16				
17				
18				
19				
20				
21	LSLD 110	LSLD 111	LSLD 112	LSLD 113
22	LSLD 16	LSLD 17	LSLD 18	LSLD 19
23	LSLD 12	LSLD 13	LSLD 14	LSLD 15
24	LSLD 212	LSLD 213	LSLD 10	LSLD 11
25	LSLD 28	LSLD 29	LSLD 210	LSLD 211
26	LSLD 24	LSLD 25	LSLD 26	LSLD 27
27	LSLD 20	LSLD 21	LSLD 22	LSLD 23
28	LSLD 310	LSLD 311	LSLD 312	LSLD 313
29	LSLD 36	LSLD 37	LSLD 38	LSLD 39
30	LSLD 32	LSLD 33	LSLD 34	LSLD 35
31	GND	GND	LSLD 30	LSLD 31
32	GND	GND		

	A	B	C	D
1				
2				
3				
4				
5				
6				
7				
8	WSLD 112	WSLD 113		
9	WSLD 18	WSLD 19	WSLD 110	WSLD 111
10	WSLD 14	WSLD 15	WSLD 16	WSLD 17
11	WSLD 10	WSLD 11	WSLD 12	WSLD 13
12	WSLD 210	WSLD 211	WSLD 212	WSLD 213
13	WSLD 26	WSLD 27	WSLD 28	WSLD 29
14	WSLD 22	WSLD 23	WSLD 24	WSLD 25
15	WSLD 312	WSLD 313	WSLD 20	WSLD 21
16	WSLD 38	WSLD 39	WSLD 310	WSLD 311
17	WSLD 34	WSLD 35	WSLD 36	WSLD 37
18	WSLD 30	WSLD 31	WSLD 32	WSLD 33
19				
20				
21				
22				
23				
24				
25				
26				
27				
28				
29				
30				
31	GND	GND		WKG5 IN
32	GND	GND		

	A	B	C
1			
2			
3			
4			
5			
6			
7			
8			
9			
10			
11			
12			
13			
14			
15			
16			
17			
18			
19			
20			
21			
22			
23			
24			
25			
26			
27			
28			
29			
30			
31	GND	GND	
32	GND	GND	

3

(11)

WKG-10

	A	B	C	D
1	+ 5V(A)	RDATA : L	RDATA : H	-5V
2	+ 5V(A)	WDATA : L	WDATA : H	-5V
3	+ 5V(A)	ADD : L	ADD : H	FUSE -
4	+ 5V(A)	CKD : L	CKD : H	CKX
5	FUSE +	RST	LALT	VD
6	THERMO	SC	HBLK	HZ
7	GND(SLTAD 1)	GND(SLTAD 2)	GND(SLTAD 3)	(SLTAD 4)
8	(SLTAD 0)	CF	VBLK	OE
9	GND	GND	GND	CK9(13.5M)
10	GND	GND	GND	CK1(27.0M)
11				
12				
13				
14				
15				
16				
17				
18				
19				
20				
21	LSLD 110	LSLD 111	LSLD 112	LSLD 113
22	LSLD 16	LSLD 17	LSLD 18	LSLD 19
23	LSLD 12	LSLD 13	LSLD 14	LSLD 15
24	LSLD 212	LSLD 213	LSLD 10	LSLD 11
25	LSLD 28	LSLD 29	LSLD 210	LSLD 211
26	LSLD 24	LSLD 25	LSLD 26	LSLD 27
27	LSLD 20	LSLD 21	LSLD 22	LSLD 23
28	LSLD 310	LSLD 311	LSLD 312	LSLD 313
29	LSLD 36	LSLD 37	LSLD 38	LSLD 39
30	LSLD 32	LSLD 33	LSLD 34	LSLD 35
31	GND	GND	LSLD 30	LSLD 31
32	GND	GND		

	A	B	C	D
1				
2				
3				
4				
5				
6				
7				
8	WSLD 112	WSLD 113		
9	WSLD 18	WSLD 19	WSLD 110	WSLD 111
10	WSLD 14	WSLD 15	WSLD 16	WSLD 17
11	WSLD 10	WSLD 11	WSLD 12	WSLD 13
12	WSLD 210	WSLD 211	WSLD 212	WSLD 213
13	WSLD 26	WSLD 27	WSLD 28	WSLD 29
14	WSLD 22	WSLD 23	WSLD 24	WSLD 25
15	WSLD 312	WSLD 313	WSLD 20	WSLD 21
16	WSLD 38	WSLD 39	WSLD 310	WSLD 311
17	WSLD 34	WSLD 35	WSLD 36	WSLD 37
18	WSLD 30	WSLD 31	WSLD 32	WSLD 33
19				
20				
21				
22				
23				
24				
25				
26				
27				
28				
29				
30				
31	GND	GND		WKG5 IN
32	GND	GND		

	A	B	C
1			
2			
3			
4			
5			
6			
7			
8			
9			
10			
11			
12			
13			
14			
15			
16			
17			
18			
19			
20			
21			
22			
23			
24			
25			
26			
27			
28			
29			
30			
31			
32			

4

WIPE

5

MB-482 BOARD (1 / 8)
BOARD NO.1-646-031-11
DVS-6000/6000C

3-89

MB-482(2/8);MOTHER BOARD

(12) KPC-5

	A	B	C	D
1	+5V(A)	RDATA : L	RDATA : H	-5V
2	+5V(A)	WDATA : L	WDATA : H	-5V
3	+5V(A)	ADD : L	ADD : H	FUSE -
4	+5V(A)	CKD : L	CKD : H	CKX
5	FUSE +	RST	LALT	VD
6	THERMO	SC	HBLK	HZ
7	(SLTAD 1)	GND(SLTAD 2)	GND(SLTAD 3)	(SLTAD 4)
8	GND(SLTAD 0)	CF	VBLK	OE
9	GND	GND	GND	CK10(13.5M)
10	GND	GND	GND	CK2(27.0M)
11	MEFL 2 18	MEFL 2 19		
12	MEFL 2 14	MEFL 2 15	MEFL 2 16	MEFL 2 17
13	MEFL 2 10	MEFL 2 11	MEFL 2 12	MEFL 2 13
14	MEFL 1 16	MEFL 1 17	MEFL 1 18	MEFL 1 19
15	MEFL 1 12	MEFL 1 13	MEFL 1 14	MEFL 1 15
16	KYSR 2 18	KYSR 2 19	MEFL 1 10	MEFL 1 11
17	KYSR 2 14	KYSR 2 15	KYSR 2 16	KYSR 2 17
18	KYSR 2 10	KYSR 2 11	KYSR 2 12	KYSR 2 13
19	KYSR 1 16	KYSR 1 17	KYSR 1 18	KYSR 1 19
20	KYSR 1 12	KYSR 1 13	KYSR 1 14	KYSR 1 15
21	MEBG A 18	MEBG A 19	KYSR 1 10	KYSR 1 11
22	MEBG A 14	MEBG A 15	MEBG A 16	MEBG A 17
23	MEBG A 10	MEBG A 11	MEBG A 12	MEBG A 13
24	MEBG B 16	MEBG B 17	MEBG B 18	MEBG B 19
25	MEBG B 12	MEBG B 13	MEBG B 14	MEBG B 15
26	CRKY 18	CRKY 19	MEBG B 10	MEBG B 11
27	CRKY 14	CRKY 15	CRKY 16	CRKY 17
28	CRKY 10	CRKY 11	CRKY 12	CRKY 13
29	BKGD A 16	BKGD A 17	BKGD A 18	BKGD A 19
30	BKGD A 12	BKGD A 13	BKGD A 14	BKGD A 15
31	GND	GND	BKGD A 10	BKGD A 11
32	GND	GND		

	A	B	C	D
1	BKGD B 16	BKGD B 17	BKGD B 18	BKGD B 19
2	BKGD B 12	BKGD B 13	BKGD B 14	BKGD B 15
3	FILL 2 18	FILL 2 19	BKGD B 10	BKGD B 11
4	FILL 2 14	FILL 2 15	FILL 2 16	FILL 2 17
5	FILL 2 10	FILL 2 11	FILL 2 12	FILL 2 13
6	FILL 1 16	FILL 1 17	FILL 1 18	FILL 1 19
7	FILL 1 12	FILL 1 13	FILL 1 14	FILL 1 15
8	WSLD 112	WSLD 113	FILL 1 10	FILL 1 11
9	WSLD 18	WSLD 19	WSLD 110	WSLD 111
10	WSLD 14	WSLD 15	WSLD 16	WSLD 17
11	WSLD 10	WSLD 11	WSLD 12	WSLD 13
12	WSLD 210	WSLD 211	WSLD 212	WSLD 213
13	WSLD 26	WSLD 27	WSLD 28	WSLD 29
14	WSLD 22	WSLD 23	WSLD 24	WSLD 25
15	WSLD 312	WSLD 313	WSLD 20	WSLD 21
16	WSLD 38	WSLD 39	WSLD 310	WSLD 311
17	WSLD 34	WSLD 35	WSLD 36	WSLD 37
18	WSLD 30	WSLD 31	WSLD 32	WSLD 33
19	CRKY 26	CRKY 27	CRKY 28	CRKY 29
20	CRKY 22	CRKY 23	CRKY 24	CRKY 25
21			CRKY 20	CRKY 21
22	MASK 18	MASK 19		
23	MASK 14	MASK 15	MASK 16	MASK 17
24	MASK 10	MASK 11	MASK 12	MASK 13
25	ME 133	ME 134	ME 135	ME 136
26	BDKS 1 10	BDKS 1 11	BDKS 1 12	BDKS 1 13
27	BKDS 1 18	BKDS 1 19	BKDS 1 110	BKDS 1 111
28	BDKS 1 14	BDKS 1 15	BDKS 1 16	BDKS 1 17
29	NRKS 1 18	NRKS 1 19	NRKS 1 110	NRKS 1 111
30	NRKS 1 14	NRKS 1 15	NRKS 1 16	NRKS 1 17
31	GND	GND	NRKS 1 12	NRKS 1 13
32	GND	GND	NRKS 1 10	NRKS 1 11

	A	B	C
1	GND	GND	GND
2	BDKS 2 19	BDKS 2 110	BDKS 2 111
3	BDKS 2 16	BDKS 2 17	BDKS 2 18
4	NRKS 2 111	BDKS 2 14	BDKS 2 15
5	NRKS 2 18	NRKS 2 19	NRKS 2 110
6	NRKS 2 15	NRKS 2 16	NRKS 2 17
7	NRKS 2 12	NRKS 2 13	NRKS 2 14
8	NTRS 111	NRKS 2 10	NRKS 2 11
9	NTRS 18	NTRS 19	NTRS 110
10	NTRS 15	NTRS 16	NTRS 17
11	NTRS 12	NTRS 13	NTRS 14
12	OTRS 111	NTRS 10	NTRS 11
13	OTRS 18	OTRS 19	OTRS 110
14	OTRS 15	OTRS 16	OTRS 17
15	OTRS 12	OTRS 13	OTRS 14
16	BDKS 2 13	OTRS 10	OTRS 11
17	BDKS 2 10	BDKS 2 11	BDKS 2 12
18	ME 130	ME 131	ME 132
19	ME 127	ME 128	ME 129
20	ME 124	ME 125	ME 126
21	ME 121	ME 122	ME 123
22	ME 118	ME 119	ME 120
23	ME 115	ME 116	ME 117
24	ME 112	ME 113	ME 114
25	ME 19	ME 110	ME 111
26	ME 16	ME 17	ME 18
27	ME 13	ME 14	ME 15
28	ME 10	ME 11	ME 12
29	GND	GND	GND
30	GND	GND	GND
31	GND	GND	GND
32	GND	GND	GND

5 ME1 KEY

(13) MIX-8

	A	B	C	D
1	+5V(A)	RDATA : L	RDATA : H	-5V
2	+5V(A)	WDATA : L	WDATA : H	-5V
3	+5V(A)	ADD : L	ADD : H	FUSE -
4	+5V(A)	CKD : L	CKD : H	CKX
5	FUSE +	RST	LALT	VD
6	THERMO	SC	HBLK	HZ
7	(SLTAD 1)	GND(SLTAD 2)	GND(SLTAD 3)	(SLTAD 4)
8	(SLTAD 0)	CF	VBLK	OE
9	GND	GND	GND	CK10(13.5M)
10	GND	GND	GND	CK2(27.0M)
11	MEFL 2 18	MEFL 2 19		
12	MEFL 2 14	MEFL 2 15	MEFL 2 16	MEFL 2 17
13	MEFL 2 10	MEFL 2 11	MEFL 2 12	MEFL 2 13
14	MEFL 1 16	MEFL 1 17	MEFL 1 18	MEFL 1 19
15	MEFL 1 12	MEFL 1 13	MEFL 1 14	MEFL 1 15
16			MEFL 1 10	MEFL 1 11
17				
18				
19				
20				
21				
22	MEBG A 16	MEBG A 17	MEBG A 18	MEBG A 19
23	MEBG A 12	MEBG A 13	MEBG A 14	MEBG A 15
24	MEBG B 18	MEBG B 19	MEBG A 10	MEBG A 11
25	MEBG B 14	MEBG B 15	MEBG B 16	MEBG B 17
26	MEBG B 10	MEBG B 11	MEBG B 12	MEBG B 13
27	PGM 16	PGM 17	PGM 18	PGM 19
28	PGM 12	PGM 13	PGM 14	PGM 15
29			PGM 10	PGM 11
30				
31	GND	GND		
32	GND	GND		

	A	B	C	D
1				
2				
3	PVW 18	PVW 19		
4	PVW 14	PVW 15	PVW 16	PVW 17
5	PVW 10	PVW 11	PVW 12	PVW 13
6				
7				
8				
9				
10				
11				
12				
13				
14				
15				
16				
17				
18				
19				
20				
21				
22				
23				
24				
25	ME 133	ME 134	ME 135	ME 136
26	BDKS 1 10	BDKS 1 11	BDKS 1 12	BDKS 1 13
27	BKDS 1 18	BKDS 1 19	BKDS 1 110	BKDS 1 111
28	BDKS 1 14	BDKS 1 15	BDKS 1 16	BDKS 1 17
29	NRKS 1 18	NRKS 1 19	NRKS 1 110	NRKS 1 111
30	NRKS 1 14	NRKS 1 15	NRKS 1 16	NRKS 1 17
31	GND	GND	NRKS 1 12	NRKS 1 13
32	GND	GND	NRKS 1 10	NRKS 1 11

	A	B	C
1	GND	GND	GND
2	BDKS 2 19	BDKS 2 110	BDKS 2 111
3	BDKS 2 16	BDKS 2 17	BDKS 2 18
4	NRKS 2 111	BDKS 2 14	BDKS 2 15
5	NRKS 2 18	NRKS 2 19	NRKS 2 110
6	NRKS 2 15	NRKS 2 16	NRKS 2 17
7	NRKS 2 12	NRKS 2 13	NRKS 2 14
8	NTRS 111	NRKS 2 10	NRKS 2 11
9	NTRS 18	NTRS 19	NTRS 110
10	NTRS 15	NTRS 16	NTRS 17
11	NTRS 12	NTRS 13	NTRS 14
12	OTRS 111	NTRS 10	NTRS 11
13	OTRS 18	OTRS 19	OTRS 110
14	OTRS 15	OTRS 16	OTRS 17
15	OTRS 12	OTRS 13	OTRS 14
16	BDKS 2 13	OTRS 10	OTRS 11
17	BDKS 2 10	BDKS 2 11	BDKS 2 12
18	ME 130	ME 131	ME 132
19	ME 127	ME 128	ME 129
20	ME 124	ME 125	ME 126
21	ME 121	ME 122	ME 123
22	ME 118	ME 119	ME 120
23	ME 115	ME 116	ME 117
24	ME 112	ME 113	ME 114
25	ME 19	ME 110	ME 111
26	ME 16	ME 17	ME 18
27	ME 13	ME 14	ME 15
28	ME 10	ME 11	ME 12
29	GND	GND	GND
30	GND	GND	GND
31	GND	GND	GND
32	GND	GND	GND

6 ME1 MIX

(14) KPC-5

	A	B	C	D
1	+5V(A)	RDATA : L	RDATA : H	-5V
2	+5V(A)	WDATA : L	WDATA : H	-5V
3	+5V(A)	ADD : L	ADD : H	FUSE -
4	+5V(A)	CKD : L	CKD : H	CKX
5	FUSE +	RST	LALT	VD
6	THERMO	SC	HBLK	HZ
7	GND(SLTAD 1)	(SLTAD 2)	GND(SLTAD 3)	(SLTAD 4)
8	GND(SLTAD 0)	CF	VBLK	OE
9	GND	GND	GND	CK11(13.5M)
10	GND	GND	GND	CK3(27.0M)
11	MEFL 2 28	MEFL 2 29		
12	MEFL 2 24	MEFL 2 25	MEFL 2 26	MEFL 2 27
13	MEFL 2 20	MEFL 2 21	MEFL 2 22	MEFL 2 23
14	MEFL 1 26	MEFL 1 27	MEFL 1 28	MEFL 1 29
15	MEFL 1 22	MEFL 1 23	MEFL 1 24	MEFL 1 25
16	KYSR 2 28	KYSR 2 29	MEFL 1 20	MEFL 1 21
17	KYSR 2 24	KYSR 2 25	KYSR 2 26	KYSR 2 27
18	KYSR 2 20	KYSR 2 21	KYSR 2 22	KYSR 2 23
19	KYSR 1 26	KYSR 1 27	KYSR 1 28	KYSR 1 29
20	KYSR 1 22	KYSR 1 23	KYSR 1 24	KYSR 1 25
21	MEBG A 28	MEBG A 29	KYSR 1 20	KYSR 1 21
22	MEBG A 24	MEBG A 25	MEBG A 26	MEBG A 27
23	MEBG A 20	MEBG A 21	MEBG A 22	MEBG A 23
24	MEBG B 26	MEBG B 27	MEBG B 28	MEBG B 29
25	MEBG B 22	MEBG B 23	MEBG B 24	MEBG B 25
26	CRKY 28	CRKY 29	MEBG B 20	MEBG B 21
27	CRKY 24	CRKY 25	CRKY 26	CRKY 27
28	CRKY 20	CRKY 21	CRKY 22	CRKY 23
29	BKGD A 26	BKGD A 27	BKGD A 28	BKGD A 29
30	BKGD A 22	BKGD A 23	BKGD A 24	BKGD A 25
31	GND	GND	BKGD A 20	BKGD A 21
32	GND	GND		

	A	B	C	D
1	BKGD B 26	BKGD B 27	BKGD B 28	BKGD B 29
2	BKGD B 22	BKGD B 23	BKGD B 24	BKGD B 25
3	FILL 2 28	FILL 2 29	BKGD B 20	BKGD B 21
4	FILL 2 24	FILL 2 25	FILL 2 26	FILL 2 27
5	FILL 2 20	FILL 2 21	FILL 2 22	FILL 2 23
6	FILL 1 26	FILL 1 27	FILL 1 28	FILL 1 29
7	FILL 1 22	FILL 1 23	FILL 1 24	FILL 1 25
8	WSLD 112	WSLD 113	FILL 1 20	FILL 1 21
9	WSLD 18	WSLD 19	WSLD 110	WSLD 111
10	WSLD 14	WSLD 15	WSLD 16	WSLD 17
11	WSLD 10	WSLD 11	WSLD 12	WSLD 13
12	WSLD 210	WSLD 211	WSLD 212	WSLD 213
13	WSLD 26	WSLD 27	WSLD 28	WSLD 29
14	WSLD 22	WSLD 23	WSLD 24	WSLD 25
15	WSLD 312	WSLD 313	WSLD 20	WSLD 21
16	WSLD 38	WSLD 39	WSLD 310	WSLD 311
17	WSLD 34	WSLD 35	WSLD 36	WSLD 37
18	WSLD 30	WSLD 31	WSLD 32	WSLD 33
19	CRKY 16	CRKY 17	CRKY 18	CRKY 19
20	CRKY 12	CRKY 13	CRKY 14	CRKY 15
21			CRKY 10	CRKY 11
22	MASK 28	MASK 29		
23	MASK 24	MASK 25	MASK 26	MASK 27
24	MASK 20	MASK 21	MASK 22	MASK 23
25	ME 233	ME 234	ME 235	ME 236
26	BDKS 1 20	BDKS 1 21	BDKS 1 22	BDKS 1 23
27	BKDS 1 28	BKDS 1 29	BKDS 1 210	BKDS 1 211
28	BDKS 1 24	BDKS 1 25	BDKS 1 26	BDKS 1 27
29	NRKS 1 28	NRKS 1 29	NRKS 1 210	NRKS 1 211
30	NRKS 1 24	NRKS 1 25	NRKS 1 26	NRKS 1 27
31	GND	GND	NRKS 1 22	NRKS 1 23
32	GND	GND	NRKS 1 20	NRKS 1 21

	A	B	C
1	GND	GND	GND
2	BDKS 2 29	BDKS 2 210	BDKS 2 211
3	BDKS 2 26	BDKS 2 27	BDKS 2 28
4	NRKS 2 211	BDKS 2 24	BDKS 2 25
5	NRKS 2 28	NRKS 2 29	NRKS 2 210
6	NRKS 2 25	NRKS 2 26	NRKS 2 27
7	NRKS 2 22	NRKS 2 23	NRKS 2 24
8	NTRS 211	NRKS 2 20	NRKS 2 21
9	NTRS 28	NTRS 29	NTRS 210
10	NTRS 25	NTRS 26	NTRS 27
11	NTRS 22	NTRS 23	NTRS 24
12	OTRS 211	NTRS 20	NTRS 21
13	OTRS 28	OTRS 29	OTRS 210
14	OTRS 25	OTRS 26	OTRS 27
15	OTRS 22	OTRS 23	OTRS 24
16	BDKS 2 23	OTRS 20	OTRS 21
17	BDKS 2 20	BDKS 2 21	BDKS 2 22
18	ME 230	ME 231	ME 232
19	ME 227	ME 228	ME 229
20	ME 224	ME 225	ME 226
21	ME 221	ME 222	ME 223
22	ME 218	ME 219	ME 220
23	ME 215	ME 216	ME 217
24	ME 212	ME 213	ME 214
25	ME 29	ME 210	ME 211
26	ME 26	ME 27	ME 28
27	ME 23	ME 24	ME 25
28	ME 20	ME 21	ME 22
29	GND	GND	GND
30	GND	GND	GND
31	GND	GND	GND
32	GND	GND	GND

7 ME2 KEY

(15 MIX-

	A	B	
1	+5V(A)	RDAT	
2	+5V(A)	WDAT	
3	+5V(A)	ADD	
4	+5V(A)	CKD	
5	FUSE +	LA	
6	THERMO	HE	
7	GND(SLTAD 1)	GND(S	
8	(SLTAD 0)	CF	VE
9	GND	GND	G
10	GND	GND	G
11	MEFL 2 28	MEFL 2 29	
12	MEFL 2 24	MEFL 2 25	MEFL
13	MEFL 2 20	MEFL 2 21	MEFL
14	MEFL 1 26	MEFL 1 27	MEFL
15	MEFL 1 22	MEFL 1 23	MEFL
16			MEFL
17			
18			
19			
20			
21			
22	MEBG A 26	MEBG A 27	MEBG
23	MEBG A 22	MEBG A 23	MEBG
24	MEBG B 28	MEBG B 29	MEBG
25	MEBG B 24	MEBG B 25	MEBG
26	MEBG B 20	MEBG B 21	MEBG
27	PGM 26	PGM 27	PGI
28	PGM 22	PGM 23	PGI
29			PGI
30			
31	GND	GND	
32	GND	GND	

	A	B	
1			
2			
3	PVW 28	PVW 29	
4	PVW 24	PVW 25	PV
5	PVW 20	PVW 21	PV
6			
7			
8			
9			
10			
11			
12			
13			
14			
15			
16			
17			
18			
19			
20			
21			
22			
23			
24			
25	ME 233	ME 234	ME
26	BDKS 1 20	BDKS 1 21	BDKS
27	BKDS 1 28	BKDS 1 29	BKDS
28	BDKS 1 24	BDKS 1 25	BDKS
29	NRKS 1 28	NRKS 1 29	NRKS
30	NRKS 1 24	NRKS 1 25	NRKS
31	GND	GND	NRKS
32	GND	GND	NRKS

	A	B	
1	GND	GND	G
2	BDKS 2 29	BDKS 2 210	BDKS
3	BDKS 2 26	BDKS 2 27	BDKS
4	NRKS 2 211	BDKS 2 24	BDKS
5	NRKS 2 28	NRKS 2 29	NRKS
6	NRKS 2 25	NRKS 2 26	NRKS
7	NRKS 2 22	NRKS 2 23	NRKS
8	NTRS 211	NRKS 2 20	NRKS
9	NTRS 28	NTRS 29	NTR
10	NTRS 25	NTRS 26	NTR
11	NTRS 22	NTRS 23	NTR
12	OTRS 211	NTRS 20	NTR
13	OTRS 28	OTRS 29	OTR
14	OTRS 25	OTRS 26	OTR
15	OTRS 22	OTRS 23	OTR
16	BDKS 2 23	OTRS 20	OTR
17	BDKS 2 20	BDKS 2 21	BDKS
18	ME 230	ME 231	ME
19	ME 227	ME 228	ME
20	ME 224	ME 225	ME
21	ME 221	ME 222	ME
22	ME 218	ME 219	ME
23	ME 215	ME 216	ME
24	ME 212	ME 213	ME
25	ME 29	ME 210	ME
26	ME 26	ME 27	M
27	ME 23	ME 24	M
28	ME 20	ME 21	M
29	GND	GND	G
30	GND	GND	G
31	GND	GND	G
32	GND	GND	G

8 ME2 MIX

(13) MIX-8

	A	B	C	D
	5V(A)	RDATA : L	RDATA : H	-5V
	5V(A)	WDATA : L	WDATA : H	-5V
	5 A)	ADD : L	ADD : H	FUSE -
	S A)	CKD : L	CKD : H	CKX
	IS +	RST	LALT	VD
	IE O	SC	HBLK	HZ
	L IAD 1)	GND(SLTAD 2)	GND(SLTAD 3)	(SLTAD 4)
	LTAD 0)	CF	VBLK	OE
	GND	GND	GND	CK10(13.5M)
	GND	GND	GND	CK2(27.0M)
	L 18	MEFL 2 19		
	L 14	MEFL 2 15	MEFL 2 16	MEFL 2 17
	L 10	MEFL 2 11	MEFL 2 12	MEFL 2 13
	L 16	MEFL 1 17	MEFL 1 18	MEFL 1 19
	L 1 12	MEFL 1 13	MEFL 1 14	MEFL 1 15
			MEFL 1 10	MEFL 1 11
	G A 16	MEBG A 17	MEBG A 18	MEBG A 19
	G A 12	MEBG A 13	MEBG A 14	MEBG A 15
	G B 18	MEBG B 19	MEBG A 10	MEBG A 11
	G 14	MEBG B 15	MEBG B 16	MEBG B 17
	G 10	MEBG B 11	MEBG B 12	MEBG B 13
	M 6	PGM 17	PGM 18	PGM 19
	M 2	PGM 13	PGM 14	PGM 15
			PGM 10	PGM 11
	ND	GND		
	ND	GND		

(14) KPC-5

	A	B	C	D
1	+5V(A)	RDATA : L	RDATA : H	-5V
2	+5V(A)	WDATA : L	WDATA : H	-5V
3	+5V(A)	ADD : L	ADD : H	FUSE -
4	+5V(A)	CKD : L	CKD : H	CKX
5	FUSE +	RST	LALT	VD
6	THERMO	SC	HBLK	HZ
7	GND(SLTAD 1)	(SLTAD 2)	GND(SLTAD 3)	(SLTAD 4)
8	GND(SLTAD 0)	CF	VBLK	OE
9	GND	GND	GND	CK11(13.5M)
10	GND	GND	GND	CK3(27.0M)
11	MEFL 2 28	MEFL 2 29		
12	MEFL 2 24	MEFL 2 25	MEFL 2 26	MEFL 2 27
13	MEFL 2 20	MEFL 2 21	MEFL 2 22	MEFL 2 23
14	MEFL 1 26	MEFL 1 27	MEFL 1 28	MEFL 1 29
15	MEFL 1 22	MEFL 1 23	MEFL 1 24	MEFL 1 25
16	KYSR 2 28	KYSR 2 29	MEFL 1 20	MEFL 1 21
17	KYSR 2 24	KYSR 2 25	KYSR 2 26	KYSR 2 27
18	KYSR 2 20	KYSR 2 21	KYSR 2 22	KYSR 2 23
19	KYSR 1 26	KYSR 1 27	KYSR 1 28	KYSR 1 29
20	KYSR 1 22	KYSR 1 23	KYSR 1 24	KYSR 1 25
21	MEBG A 28	MEBG A 29	KYSR 1 20	KYSR 1 21
22	MEBG A 24	MEBG A 25	MEBG A 26	MEBG A 27
23	MEBG A 20	MEBG A 21	MEBG B 22	MEBG B 23
24	MEBG B 26	MEBG B 27	MEBG B 28	MEBG B 29
25	MEBG B 22	MEBG B 23	MEBG B 24	MEBG B 25
26	CRKY 28	CRKY 29	MEBG B 20	MEBG B 21
27	CRKY 24	CRKY 25	CRKY 26	CRKY 27
28	CRKY 20	CRKY 21	CRKY 22	CRKY 23
29	BKGD A 26	BKGD A 27	BKGD A 28	BKGD A 29
30	BKGD A 22	BKGD A 23	BKGD A 24	BKGD A 25
31	GND	GND	BKGD A 20	BKGD A 21
32	GND	GND		

(15) MIX-8

	A	B	C	D
1	+5V(A)	RDATA : L	RDATA : H	-5V
2	+5V(A)	WDATA : L	WDATA : H	-5V
3	+5V(A)	ADD : L	ADD : H	FUSE -
4	+5V(A)	CKD : L	CKD : H	CKX
5	FUSE +	RST	LALT	VD
6	THERMO	SC	HBLK	HZ
7	GND(SLTAD 1)	(SLTAD 2)	GND(SLTAD 3)	(SLTAD 4)
8	(SLTAD 0)	CF	VBLK	OE
9	GND	GND	GND	CK11(13.5M)
10	GND	GND	GND	CK3(27.0M)
11	MEFL 2 28	MEFL 2 29		
12	MEFL 2 24	MEFL 2 25	MEFL 2 26	MEFL 2 27
13	MEFL 2 20	MEFL 2 21	MEFL 2 22	MEFL 2 23
14	MEFL 1 26	MEFL 1 27	MEFL 1 28	MEFL 1 29
15	MEFL 1 22	MEFL 1 23	MEFL 1 24	MEFL 1 25
16			MEFL 1 20	MEFL 1 21
17				
18				
19				
20				
21				
22	MEBG A 26	MEBG A 27	MEBG A 28	MEBG A 29
23	MEBG A 22	MEBG A 23	MEBG A 24	MEBG A 25
24	MEBG B 28	MEBG B 29	MEBG A 20	MEBG A 21
25	MEBG B 24	MEBG B 25	MEBG B 26	MEBG B 27
26	MEBG B 20	MEBG B 21	MEBG B 22	MEBG B 23
27	PGM 26	PGM 27	PGM 28	PGM 29
28	PGM 22	PGM 23	PGM 24	PGM 25
29			PGM 20	PGM 21
30				
31	GND	GND		
32	GND	GND		

X

	A	B	C	D
	W 18	PVW 19		
	W 4	PVW 15	PVW 16	PVW 17
	W 0	PVW 11	PVW 12	PVW 13

	A	B	C	D
1	BKGD B 26	BKGD B 27	BKGD B 28	BKGD B 29
2	BKGD B 22	BKGD B 23	BKGD B 24	BKGD B 25
3	FILL 2 28	FILL 2 29	BKGD B 20	BKGD B 21
4	FILL 2 24	FILL 2 25	FILL 2 26	FILL 2 27
5	FILL 2 20	FILL 2 21	FILL 2 22	FILL 2 23
6	FILL 1 26	FILL 1 27	FILL 1 28	FILL 1 29
7	FILL 1 22	FILL 1 23	FILL 1 24	FILL 1 25
8	WSLD 112	WSLD 113	FILL 1 20	FILL 1 21
9	WSLD 18	WSLD 19	WSLD 110	WSLD 111
10	WSLD 14	WSLD 15	WSLD 16	WSLD 17
11	WSLD 10	WSLD 11	WSLD 12	WSLD 13
12	WSLD 210	WSLD 211	WSLD 212	WSLD 213
13	WSLD 26	WSLD 27	WSLD 28	WSLD 29
14	WSLD 22	WSLD 23	WSLD 24	WSLD 25
15	WSLD 312	WSLD 313	WSLD 20	WSLD 21
16	WSLD 38	WSLD 39	WSLD 310	WSLD 311
17	WSLD 34	WSLD 35	WSLD 36	WSLD 37
18	WSLD 30	WSLD 31	WSLD 32	WSLD 33
19	CRKY 16	CRKY 17	CRKY 18	CRKY 19
20	CRKY 12	CRKY 13	CRKY 14	CRKY 15
21			CRKY 10	CRKY 11
22	MASK 28	MASK 29		
23	MASK 24	MASK 25	MASK 26	MASK 27
24	MASK 20	MASK 21	MASK 22	MASK 23
25	ME 233	ME 234	ME 235	ME 236
26	BDKS 1 20	BDKS 1 21	BDKS 1 22	BDKS 1 23
27	BKDS 1 28	BKDS 1 29	BKDS 1 210	BKDS 1 211
28	BDKS 1 24	BDKS 1 25	BDKS 1 26	BDKS 1 27
29	NRKS 1 28	NRKS 1 29	NRKS 1 210	NRKS 1 211
30	NRKS 1 24	NRKS 1 25	NRKS 1 26	NRKS 1 27
31	GND	GND	NRKS 1 22	NRKS 1 23
32	GND	GND	NRKS 1 20	NRKS 1 21

	A	B	C	D
1				
2				
3	PVW 28	PVW 29		
4	PVW 24	PVW 25	PVW 26	PVW 27
5	PVW 20	PVW 21	PVW 22	PVW 23
6				
7				
8				
9				
10				
11				
12				
13				
14				
15				
16				
17				
18				
19				
20				
21				
22				
23				
24				
25	ME 233	ME 234	ME 235	ME 236
26	BDKS 1 20	BDKS 1 21	BDKS 1 22	BDKS 1 23
27	BKDS 1 28	BKDS 1 29	BKDS 1 210	BKDS 1 211
28	BDKS 1 24	BDKS 1 25	BDKS 1 26	BDKS 1 27
29	NRKS 1 28	NRKS 1 29	NRKS 1 210	NRKS 1 211
30	NRKS 1 24	NRKS 1 25	NRKS 1 26	NRKS 1 27
31	GND	GND	NRKS 1 22	NRKS 1 23
32	GND	GND	NRKS 1 20	NRKS 1 21

Y

	A	B	C
	ND	GND	GND
	S 2 19	BDKS 2 110	BDKS 2 111
	S 2 16	BDKS 2 17	BDKS 2 18
	111	BDKS 2 14	BDKS 2 15
	S 18	NRKS 2 19	NRKS 2 110
	S 15	NRKS 2 16	NRKS 2 17
	S 12	NRKS 2 13	NRKS 2 14
	S 111	NRKS 2 10	NRKS 2 11
	S 18	NTRS 19	NTRS 110
	S 15	NTRS 16	NTRS 17
	S 12	NTRS 13	NTRS 14
	S 11	NTRS 10	NTRS 11
	S 8	OTRS 19	OTRS 110
	S 5	OTRS 16	OTRS 17
	S 2	OTRS 13	OTRS 14
	S 2 13	OTRS 10	OTRS 11
	S 2 10	BDKS 2 11	BDKS 2 12
	130	ME 131	ME 132
		ME 128	ME 129
		ME 125	ME 126
		ME 122	ME 123
		ME 119	ME 120
	115	ME 116	ME 117
	112	ME 113	ME 114
	19	ME 110	ME 111
		ME 17	ME 18
		ME 14	ME 15
		ME 11	ME 12
	NI	GND	GND
	ND	GND	GND
	ND	GND	GND
	ND	GND	GND

Z

	A	B	C
1	GND	GND	GND
2	BDKS 2 29	BDKS 2 210	BDKS 2 211
3	BDKS 2 26	BDKS 2 27	BDKS 2 28
4	NRKS 2 211	BDKS 2 24	BDKS 2 25
5	NRKS 2 28	NRKS 2 29	NRKS 2 210
6	NRKS 2 25	NRKS 2 26	NRKS 2 27
7	NRKS 2 22	NRKS 2 23	NRKS 2 24
8	NTRS 211	NRKS 2 20	NRKS 2 21
9	NTRS 28	NTRS 29	NTRS 210
10	NTRS 25	NTRS 26	NTRS 27
11	NTRS 22	NTRS 23	NTRS 24
12	OTRS 211	NTRS 20	NTRS 21
13	OTRS 28	OTRS 29	OTRS 210
14	OTRS 25	OTRS 26	OTRS 27
15	OTRS 22	OTRS 23	OTRS 24
16	BDKS 2 23	OTRS 20	OTRS 21
17	BDKS 2 20	BDKS 2 21	BDKS 2 22
18	ME 230	ME 231	ME 232
19	ME 227	ME 228	ME 229
20	ME 224	ME 225	ME 226
21	ME 221	ME 222	ME 223
22	ME 218	ME 219	ME 220
23	ME 215	ME 216	ME 217
24	ME 212	ME 213	ME 214
25	ME 29	ME 210	ME 211
26	ME 26	ME 27	ME 28
27	ME 23	ME 24	ME 25
28	ME 20	ME 21	ME 22
29	GND	GND	GND
30	GND	GND	GND
31	GND	GND	GND
32	GND	GND	GND

	A	B	C
1	GND	GND	GND
2	BDKS 2 29	BDKS 2 210	BDKS 2 211
3	BDKS 2 26	BDKS 2 27	BDKS 2 28
4	NRKS 2 211	BDKS 2 24	BDKS 2 25
5	NRKS 2 28	NRKS 2 29	NRKS 2 210
6	NRKS 2 25	NRKS 2 26	NRKS 2 27
7	NRKS 2 22	NRKS 2 23	NRKS 2 24
8	NTRS 211	NRKS 2 20	NRKS 2 21
9	NTRS 28	NTRS 29	NTRS 210
10	NTRS 25	NTRS 26	NTRS 27
11	NTRS 22	NTRS 23	NTRS 24
12	OTRS 211	NTRS 20	NTRS 21
13	OTRS 28	OTRS 29	OTRS 210
14	OTRS 25	OTRS 26	OTRS 27
15	OTRS 22	OTRS 23	OTRS 24
16	BDKS 2 23	OTRS 20	OTRS 21
17	BDKS 2 20	BDKS 2 21	BDKS 2 22
18	ME 230	ME 231	ME 232
19	ME 227	ME 228	ME 229
20	ME 224	ME 225	ME 226
21	ME 221	ME 222	ME 223
22	ME 218	ME 219	ME 220
23	ME 215	ME 216	ME 217
24	ME 212	ME 213	ME 214
25	ME 29	ME 210	ME 211
26	ME 26	ME 27	ME 28
27	ME 23	ME 24	ME 25
28	ME 20	ME 21	ME 22
29	GND	GND	GND
30	GND	GND	GND
31	GND	GND	GND
32	GND	GND	GND

6 ME1 MIX

7 ME2 KEY

8 ME2 MIX

MB-482 BOARD (2/8)

BOARD NO.1-646-031-11

DVS-6000/6000C

E F G H I J K L

MB-482(3/8);MOTHER BOARD

(1B)
DSK-9

	A	B	C	D
1	+5V(A)	RDATA : L	RDATA : H	-5V
2	+5V(A)	WDATA : L	WDATA : H	-5V
3	+5V(A)	ADD : L	ADD : H	FUSE -
4	+5V(A)	CKD : L	CKD : H	CKX
5	FUSE +	RST	LALT	VD
6	THERMO	SC	HBLK	HZ
7	(SLTAD 1)	GND(SLTAD 2)	(SLTAD 3)	(SLTAD 4)
8	(SLTAD 0)	CF	VBLK	OE
9	GND	GND	GND	CK12(13.5M)
10	GND	GND	GND	CK4(27.0M)
11				
12				
13				
14				
15				
16	KYSR D8	KYSR D9		
17	KYSR D4	KYSR D5	KYSR D6	KYSR D7
18	KYSR D0	KYSR D1	KYSR D2	KYSR D3
19				
20				
21				
22				
23				
24				
25				
26	PGM 18	PGM 19		
27	PGM 14	PGM 15	PGM 16	PGM 17
28	PGM 10	PGM 11	PGM 12	PGM 13
29	PGM 26	PGM 27	PGM 28	PGM 29
30	PGM 22	PGM 23	PGM 24	PGM 25
31	GND	GND	PGM 20	PGM 21
32	GND	GND		

	A	B	C	D
1	FILL D6	FILL D7	FILL D8	FILL D9
2	FILL D2	FILL D3	FILL D4	FILL D5
3	PVW P8	PVW P9	FILL D0	FILL D1
4	PVW P4	PVW P5	PVW P6	PVW P7
5	PVW P0	PVW P1	PVW P2	PVW P3
6	PGM P6	PGM P7	PGM P8	PGM P9
7	PGM P2	PGM P3	PGM P4	PGM P5
8	WSLD 112	WSLD 113	PGM P0	PGM P1
9	WSLD 18	WSLD 19	WSLD 110	WSLD 111
10	WSLD 14	WSLD 15	WSLD 16	WSLD 17
11	WSLD 10	WSLD 11	WSLD 12	WSLD 13
12	WSLD 210	WSLD 211	WSLD 212	WSLD 213
13	WSLD 26	WSLD 27	WSLD 28	WSLD 29
14	WSLD 22	WSLD 23	WSLD 24	WSLD 25
15	WSLD 312	WSLD 313	WSLD 20	WSLD 21
16	WSLD 38	WSLD 39	WSLD 310	WSLD 311
17	WSLD 34	WSLD 35	WSLD 36	WSLD 37
18	WSLD 30	WSLD 31	WSLD 32	WSLD 33
19	CLFD 6	CLFD 7	CLFD 8	CLFD 9
20	CLFD 2	CLFD 3	CLFD 4	CLFD 5
21			CLFD 0	CLFD 1
22	MASK 38	MASK 39		
23	MASK 34	MASK 35	MASK 36	MASK 37
24	MASK 30	MASK 31	MASK 32	MASK 33
25				
26				
27				
28				
29				
30				
31	GND	GND		
32	GND	GND		

	A	B	C
1			
2			
3			
4			
5			
6			
7			
8			
9			
10			
11			
12			
13			
14			
15			
16			
17			
18			
19			
20			
21			
22			
23			
24			
25			
26			
27			
28			
29			
30			
31			
32			

9
PGM/ PST

(17)
OUT-3

	A	B	C	D
1	+5V(A)	RDATA : L	RDATA : H	-5V
2	+5V(A)	WDATA : L	WDATA : H	-5V
3	+5V(A)	ADD : L	ADD : H	FUSE -
4	+5V(A)	CKD : L	CKD : H	CKX
5	FUSE +	RST	LALT	VD
6	THERMO	SC	HBLK	HZ
7	(SLTAD 1)	(SLTAD 2)	GND(SLTAD 3)	(SLTAD 4)
8	(SLTAD 0)	CF	VBLK	OE
9	GND	GND	GND	CK12(13.5M)
10	GND	GND	GND	CK4(27.0M)
11	AUX1 8	AUX1 9		
12	AUX1 4	AUX1 5	AUX1 6	AUX1 7
13	AUX1 0	AUX1 1	AUX1 2	AUX1 3
14	AUX4 6	AUX4 7	AUX4 8	AUX4 9
15	AUX4 2	AUX4 3	AUX4 4	AUX4 5
16	PVW 8	PVW 9	AUX4 0	AUX4 1
17	PVW 4	PVW 5	PVW 6	PVW 7
18	PVW 0	PVW 1	PVW 2	PVW 3
19	AUX2 6	AUX2 7	AUX2 8	AUX2 9
20	AUX2 2	AUX2 3	AUX2 4	AUX2 5
21	AUX3 8	AUX3 9	AUX2 0	AUX2 1
22	AUX3 4	AUX3 5	AUX3 6	AUX3 7
23	AUX3 0	AUX3 1	AUX3 2	AUX3 3
24	PGM 16	PGM 17	PGM 18	PGM 19
25	PGM 12	PGM 13	PGM 14	PGM 15
26	PGM 28	PGM 29	PGM 10	PGM 11
27	PGM 24	PGM 25	PGM 26	PGM 27
28	PGM 20	PGM 21	PGM 22	PGM 23
29	PVW 16	PVW 17	PVW 18	PVW 19
30	PVW 12	PVW 13	PVW 14	PVW 15
31	GND	GND	PVW 10	PVW 11
32	GND	GND		

	A	B	C	D
1	PVW 26	PVW 27	PVW 28	PVW 29
2	PVW 22	PVW 23	PVW 24	PVW 25
3	PVW P8	PVW P9	PVW 20	PVW 21
4	PVW P4	PVW P5	PVW P6	PVW P7
5	PVW P0	PVW P1	PVW P2	PVW P3
6	PGM P6	PGM P7	PGM P8	PGM P9
7	PGM P2	PGM P3	PGM P4	PGM P5
8	CLFD 8	CLFD 9	PGM P0	PGM P1
9	CLFD 4	CLFD 5	CLFD 6	CLFD 7
10	CLFD 0	CLFD 1	CLFD 2	CLFD 3
11	AUX5 6	AUX5 7	AUX5 8	AUX5 9
12	AUX5 2	AUX5 3	AUX5 4	AUX5 5
13	CRKV 18	CRKV 19	AUX5 0	AUX5 1
14	CRKV 14	CRKV 15	CRKV 16	CRKV 17
15	CRKV 10	CRKV 11	CRKV 12	CRKV 13
16	CRKV 26	CRKV 27	CRKV 28	CRKV 29
17	CRKV 22	CRKV 23	CRKV 24	CRKV 25
18			CRKV 20	CRKV 21
19			AUX6 8	AUX6 9
20			AUX6 6	AUX6 7
21			AUX6 4	AUX6 5
22			AUX6 2	AUX6 3
23	PVW OUT 8	PVW OUT 9	AUX6 0	AUX6 1
24	PVW OUT 6	PVW OUT 7	MY IN 18	MY IN 19
25	PVW OUT 4	PVW OUT 5	MY IN 16	MY IN 17
26	PVW OUT 2	PVW OUT 3	MY IN 14	MY IN 15
27	PVW OUT 0	PVW OUT 1	MY IN 12	MY IN 13
28	MY IN 28	MY IN 29	MY IN 10	MY IN 11
29	MY IN 24	MY IN 25	MY IN 26	MY IN 27
30	MY IN 20	MY IN 21	MY IN 22	MY IN 23
31	GND	GND		
32	GND	GND		

	A	B	C
1	GND	GND	GND
2	GND	AUX 6	GND
3	GND	GND	GND
4	GND	AUX 4	GND
5	GND	GND	GND
6	GND	AUX 3	GND
7	GND	GND	GND
8	GND	AUX 5	GND
9	GND	GND	GND
10	GND	FLEX OUT(1)	GND
11	GND	GND	GND
12	GND	PGM(1)	GND
13	GND	GND	GND
14	GND	PGM(2)	GND
15	GND	GND	GND
16	GND	PGM(3)	GND
17	GND	GND	GND
18	GND	PGM(4)	GND
19	GND	GND	GND
20	GND	FLEX OUT(2)	GND
21	GND	GND	GND
22	GND	AUX 2	GND
23	GND	GND	GND
24	GND	AUX 1	GND
25	GND	GND	GND
26	GND		GND
27	GND	GND	GND
28	GND		GND
29	GND	GND	GND
30	GND	ME2 PGM	GND
31	GND	GND	GND
32	GND	ME1 PGM	GND

10
OUTPUT

(18)
CRK-5(D2/ DVS-6000)
CRK-4(D1/ DVS-6000C)

	A	B	C	D
1	+5V(B)	RDATA : L	RDATA : H	-5V
2	+5V(B)	WDATA : L	WDATA : H	-5V
3	+5V(B)	ADD : L	ADD : H	FUSE -
4	+5V(B)	CKD : L	CKD : H	CKX
5	FUSE +	RST	LALT	VD
6	THERMO	SC	HBLK	HZ
7	GND(SLTAD 1)	GND(SLTAD 2)	(SLTAD 3)	(SLTAD 4)
8	GND(SLTAD 0)	CF	VBLK	OE
9	GND	GND	GND	CK13(13.5M)
10	GND	GND	GND	CK5(27.0M)
11	KYSR 2 18	KYSR 2 19		
12	KYSR 2 14	KYSR 2 15	KYSR 2 16	KYSR 2 17
13	KYSR 2 10	KYSR 2 11	KYSR 2 12	KYSR 2 13
14	KYSR 1 16	KYSR 1 17	KYSR 1 18	KYSR 1 19
15	KYSR 1 12	KYSR 1 13	KYSR 1 14	KYSR 1 15
16			KYSR 1 10	KYSR 1 11
17				
18				
19	KYSR 2 26	KYSR 2 27	KYSR 2 28	KYSR 2 29
20	KYSR 2 22	KYSR 2 23	KYSR 2 24	KYSR 2 25
21	KYSR 1 28	KYSR 1 29	KYSR 2 20	KYSR 2 21
22	KYSR 1 24	KYSR 1 25	KYSR 1 26	KYSR 1 27
23	KYSR 1 20	KYSR 1 21	KYSR 1 22	KYSR 1 23
24	BKGD Y8	BKGD Y9	BKGD Y10	BKGD Y11
25	BKGD Y4	BKGD Y5	BKGD Y6	BKGD Y7
26	BKGD Y0	BKGD Y1	BKGD Y2	BKGD Y3
27	BKGD I8	BKGD I9	BKGD I10	BKGD I11
28	BKGD I4	BKGD I5	BKGD I6	BKGD I7
29	BKGD I0	BKGD I1	BKGD I2	BKGD I3
30	BKGD Q8	BKGD Q9	BKGD Q10	BKGD Q11
31	GND	GND	BKGD Q6	BKGD Q7
32	GND	GND	BKGD Q4	BKGD Q5

	A	B	C	D
1	BKGD Q0	BKGD Q1	BKGD Q2	BKGD Q3
2	FRGD Y8	FRGD Y9	FRGD Y10	FRGD Y11
3	FRGD Y4	FRGD Y5	FRGD Y6	FRGD Y7
4	FRGD Y0	FRGD Y1	FRGD Y2	FRGD Y3
5	FRGD V8	FRGD V9	FRGD V10	FRGD V11
6	FRGD V4	FRGD V5	FRGD V6	FRGD V7
7	FRGD V0	FRGD V1	FRGD V2	FRGD V3
8	FRGD U8	FRGD U9	FRGD U10	FRGD U11
9	FRGD U4	FRGD U5	FRGD U6	FRGD U7
10	FRGD U0	FRGD U1	FRGD U2	FRGD U3
11	CRK 6	CRK 7	CRK 8	CRK 9
12	CRK 2	CRK 3	CRK 4	CRK 5
13	CRKV 18	CRKV 19	CRK 0	CRK 1
14	CRKV 14	CRKV 15	CRKV 16	CRKV 17
15	CRKV 10	CRKV 11	CRKV 12	CRKV 13
16	CRKY 16	CRKY 17	CRKY 18	CRKY 19
17	CRKY 12	CRKY 13	CRKY 14	CRKY 15
18	CKFL 18	CKFL 19	CRKY 10	CRKY 11
19	CKFL 14	CKFL 15	CKFL 16	CKFL 17
20	CKFL 10	CKFL 11	CKFL 12	CKFL 13
21	CKMSK 16	CKMSK 17	CKMSK 18	CKMSK 19
22	CKMSK 12	CKMSK 13	CKMSK 14	CKMSK 15
23			CKMSK 10	CKMSK 11
24				
25				
26				
27				
28				
29				
30				
31	GND	GND		
32	GND	GND		

	A	B	C
1			
2			
3			
4			
5			
6			
7			
8			
9			
10			
11			
12			
13			
14			
15			
16			
17			
18			
19			
20			
21			
22			
23			
24			
25			
26			
27			
28			
29			
30			
31			
32			

11
CHROMA KEY 1

(19)
ADC-5(D2/ DVS-6000)
CRK-4(D1/ DVS-6000C)

	A	B	C	D
1	+5V(B)	RDATA : L	RDATA : H	-5V
2	+5V(B)	WDATA : L	WDATA : H	-5V
3	+5V(B)	ADD : L	ADD : H	FUSE -
4	+5V(B)	CKD : L	CKD : H	CKX
5	FUSE +	RST	LALT	VD
6	THERMO	SC	HBLK	HZ
7	GND(SLTAD 1)	GND(SLTAD 2)	(SLTAD 3)	(SLTAD 4)
8	(SLTAD 0)	CF	VBLK	OE
9	GND	GND	GND	CK13(13.5M)
10	GND	GND	GND	CK5(27.0M)
11	KYSR 2 18	KYSR 2 19		
12	KYSR 2 14	KYSR 2 15	KYSR 2 16	KYSR 2 17
13	KYSR 2 10	KYSR 2 11	KYSR 2 12	KYSR 2 13
14	KYSR 1 16	KYSR 1 17	KYSR 1 18	KYSR 1 19
15	KYSR 1 12	KYSR 1 13	KYSR 1 14	KYSR 1 15
16			KYSR 1 10	KYSR 1 11
17				
18				
19	KYSR 2 26	KYSR 2 27	KYSR 2 28	KYSR 2 29
20	KYSR 2 22	KYSR 2 23	KYSR 2 24	KYSR 2 25
21	KYSR 1 28	KYSR 1 29	KYSR 2 20	KYSR 2 21
22	KYSR 1 24	KYSR 1 25	KYSR 1 26	KYSR 1 27
23	KYSR 1 20	KYSR 1 21	KYSR 1 22	KYSR 1 23
24	BKGD Y8	BKGD Y9	BKGD Y10	BKGD Y11
25	BKGD Y4	BKGD Y5	BKGD Y6	BKGD Y7
26	BKGD Y0	BKGD Y1	BKGD Y2	BKGD Y3
27	BKGD I8	BKGD I9	BKGD I10	BKGD I11
28	BKGD I4	BKGD I5	BKGD I6	BKGD I7
29	BKGD I0	BKGD I1	BKGD I2	BKGD I3
30	BKGD Q8	BKGD Q9	BKGD Q10	BKGD Q11
31	GND	GND	BKGD Q6	BKGD Q7
32	GND	GND	BKGD Q4	BKGD Q5

	A	B	C	D
1	BKGD Q0	BKGD Q1	BKGD Q2	BKGD Q3
2	FRGD Y8	FRGD Y9	FRGD Y10	FRGD Y11
3	FRGD Y4	FRGD Y5	FRGD Y6	FRGD Y7
4	FRGD Y0	FRGD Y1	FRGD Y2	FRGD Y3
5	FRGD V8	FRGD V9	FRGD V10	FRGD V11
6	FRGD V4	FRGD V5	FRGD V6	FRGD V7
7	FRGD V0	FRGD V1	FRGD V2	FRGD V3
8	FRGD U8	FRGD U9	FRGD U10	FRGD U11
9	FRGD U4	FRGD U5	FRGD U6	FRGD U7
10	FRGD U0	FRGD U1	FRGD U2	FRGD U3
11	CRK 6	CRK 7	CRK 8	CRK 9
12	CRK 2	CRK 3	CRK 4	CRK 5
13	CRKV 28	CRKV 29	CRK 0	CRK 1
14	CRKV 24	CRKV 25	CRKV 26	CRKV 27
15	CRKV 20	CRKV 21	CRKV 22	CRKV 23
16	CRKY 26	CRKY 27	CRKY 28	CRKY 29
17	CRKY 22	CRKY 23	CRKY 24	CRKY 25
18	CKFL 28	CKFL 29	CRKY 20	CRKY 21
19	CKFL 24	CKFL 25	CKFL 26	CKFL 27
20	CKFL 20	CKFL 21	CKFL 22	CKFL 23
21	CKMSK 26	CKMSK 27	CKMSK 28	CKMSK 29
22	CKMSK 22	CKMSK 23	CKMSK 24	CKMSK 25
23			CKMSK 20	CKMSK 21
24				
25				
26				
27				
28				
29				
30				
31	GND	GND		
32	GND	GND		

	A	B	C
1			
2			
3			
4			
5			
6			
7			
8			
9			
10			
11			
12			
13			
14	GND	GND	GND
15	GND	GND	GND
16	GND	GND	GND
17	GND	GND	GND
18	GND	SYNC 2	GND
19	GND	GND	GND
20	GND	R-Y/R 2	GND
21	GND	GND	GND
22	GND	B-Y/B 2	GND
23	GND	GND	GND
24	GND	Y/G 2	GND
25	GND	GND	GND
26	GND	SYNC 1	GND
27	GND	GND	GND
28	GND	R-Y/R 1	GND
29	GND	GND	GND
30	GND	B-Y/B 1	GND
31	GND	GND	GND
32	GND	Y/G 1	GND

12
CHROMA KEY 2

MB-482 BOARD (3 / 8)
BOARD NO.1-646-031-11
DVS-6000/6000C

MB-482(4/8);MOTHER BOARD

(1A) MAT-4

	A	B	C	D
1	+5V(B)	RDATA : L	RDATA : H	-5V
2	+5V(B)	WDATA : L	WDATA : H	-5V
3	+5V(B)	ADD : L	ADD : H	FUSE -
4	+5V(B)	CKD : L	CKD : H	CKX
5	FUSE +	RST	LALT	VD
6	THERMO	SC	HBLK	HZ
7	(SLTAD 1)	GND(SLTAD 2)	(SLTAD 3)	(SLTAD 4)
8	GND(SLTAD 0)	CF	VBLK	OE
9	GND	GND	GND	CK14(13.5M)
10	GND	GND	GND	CK6(27.0M)
11	AUX1 6	AUX1 7	AUX1 8	AUX1 9
12	AUX1 2	AUX1 3	AUX1 4	AUX1 5
13	AUX4 8	AUX1 0	AUX1 1	
14	AUX4 4	AUX4 5	AUX4 6	AUX4 7
15	AUX4 0	AUX4 1	AUX4 2	AUX4 3
16	PVW 6	PVW 7	PVW 8	PVW 9
17	PVW 2	PVW 3	PVW 4	PVW 5
18	AUX2 8	AUX2 9	PVW 0	PVW 1
19	AUX2 4	AUX2 5	AUX2 6	AUX2 7
20	AUX2 0	AUX2 1	AUX2 2	AUX2 3
21	AUX3 6	AUX3 7	AUX3 8	AUX3 9
22	AUX3 2	AUX3 3	AUX3 4	AUX3 5
23	PGM 18	PGM 19	AUX3 0	AUX3 1
24	PGM 14	PGM 15	PGM 16	PGM 17
25	PGM 10	PGM 11	PGM 12	PGM 13
26	PGM 26	PGM 27	PGM 28	PGM 29
27	PGM 22	PGM 23	PGM 24	PGM 25
28	AUX5 8	AUX5 9	PGM 20	PGM 21
29	AUX5 4	AUX5 5	AUX5 6	AUX5 7
30	AUX5 0	AUX5 1	AUX5 2	AUX5 3
31	GND	GND	AUX6 8	AUX6 9
32	GND	GND	AUX6 6	AUX6 7

	A	B	C	D
1	AUX6 2	AUX6 3	AUX6 4	AUX6 5
2	FILL D8	FILL D9	AUX6 0	AUX6 1
3	FILL D4	FILL D5	FILL D6	FILL D7
4	FILL D0	FILL D1	FILL D2	FILL D3
5	KYSR 2 16	KYSR 2 17	KYSR 2 18	KYSR 2 19
6	KYSR 2 12	KYSR 2 13	KYSR 2 14	KYSR 2 15
7	KYSR 1 18	KYSR 1 19	KYSR 2 10	KYSR 2 11
8	KYSR 1 14	KYSR 1 15	KYSR 1 16	KYSR 1 17
9	KYSR 1 10	KYSR 1 11	KYSR 1 12	KYSR 1 13
10	KYSR D6	KYSR D7	KYSR D8	KYSR D9
11	KYSR D2	KYSR D3	KYSR D4	KYSR D5
12	KYSR 2 28	KYSR 2 29	KYSR D0	KYSR D1
13	KYSR 2 24	KYSR 2 25	KYSR 2 26	KYSR 2 27
14	KYSR 2 20	KYSR 2 21	KYSR 2 22	KYSR 2 23
15	KYSR 1 26	KYSR 1 27	KYSR 1 28	KYSR 1 29
16	KYSR 1 22	KYSR 1 23	KYSR 1 24	KYSR 1 25
17	BKGD A 28	BKGD A 29	KYSR 1 20	KYSR 1 21
18	BKGD A 24	BKGD A 25	BKGD A 26	BKGD A 27
19	BKGD A 20	BKGD A 21	BKGD A 22	BKGD A 23
20	BKGD B 26	BKGD B 27	BKGD B 28	BKGD B 29
21	BKGD B 22	BKGD B 23	BKGD B 24	BKGD B 25
22	FILL 2 28	FILL 2 29	BKGD B 20	BKGD B 21
23	FILL 2 24	FILL 2 25	FILL 2 26	FILL 2 27
24	FILL 2 20	FILL 2 21	FILL 2 22	FILL 2 23
25	FILL 1 26	FILL 1 27	FILL 1 28	FILL 1 29
26	FILL 1 22	FILL 1 23	FILL 1 24	FILL 1 25
27	BKGD A 18	BKGD A 19	FILL 1 20	FILL 1 21
28	BKGD A 14	BKGD A 15	BKGD A 16	BKGD A 17
29	BKGD A 10	BKGD A 11	BKGD A 12	BKGD A 13
30	BKGD B 16	BKGD B 17	BKGD B 18	BKGD B 19
31	GND	GND	BKGD B 14	BKGD B 15
32	GND	GND	BKGD B 12	BKGD B 13

	A	B	C
1	GND	GND	GND
2	FILL 2 19	BKGD B 10	BKGD B 11
3	FILL 2 16	FILL 2 17	FILL 2 18
4	FILL 2 13	FILL 2 14	FILL 2 15
5	FILL 2 10	FILL 2 11	FILL 2 12
6	FILL 1 17	FILL 1 18	FILL 1 19
7	FILL 1 14	FILL 1 15	FILL 1 16
8	FILL 1 11	FILL 1 12	FILL 1 13
9	MASK 38	MASK 39	FILL 1 10
10	MASK 35	MASK 36	MASK 37
11	MASK 32	MASK 33	MASK 34
12	MASK 29	MASK 30	MASK 31
13	MASK 26	MASK 27	MASK 28
14	MASK 23	MASK 24	MASK 25
15	MASK 20	MASK 21	MASK 22
16	MASK 17	MASK 18	MASK 19
17	MASK 14	MASK 15	MASK 16
18	MASK 11	MASK 12	MASK 13
19	CKFL 18	CKFL 19	MASK 10
20	CKFL 15	CKFL 16	CKFL 17
21	CKFL 12	CKFL 13	CKFL 14
22	CKFL 29	CKFL 10	CKFL 11
23	CKFL 26	CKFL 27	CKFL 28
24	CKFL 23	CKFL 24	CKFL 25
25	CKFL 20	CKFL 21	CKFL 22
26	MY OUT 17	MY OUT 18	MY OUT 19
27	MY OUT 14	MY OUT 15	MY OUT 16
28	MY OUT 11	MY OUT 12	MY OUT 13
29	MY OUT 28	MY OUT 29	MY OUT 10
30	MY OUT 25	MY OUT 26	MY OUT 27
31	MY OUT 22	MY OUT 23	MY OUT 24
32	GND	MY OUT 20	MY OUT 21

13
MATTE

(07) MY-50(D2/ DVS-6000) MY-51(D1/ DVS-6000C)

	A	B	C	D
1	+5V(B)	RDATA : L	RDATA : H	-5V
2	+5V(B)	WDATA : L	WDATA : H	-5V
3	+5V(B)	ADD : L	ADD : H	FUSE -
4	+5V(B)	CKD : L	CKD : H	CKX
5	FUSE +	RST	LALT	VD
6	THERMO	SC	HBLK	HZ
7	(SLTAD 1)	(SLTAD 2)	GND(SLTAD 3)	GND(SLTAD 4)
8	(SLTAD 0)	CF	VBLK	OE
9	GND	GND	GND	CK14(13.5M)
10	GND	GND	GND	CK6(27.0M)
11				
12				
13				
14				
15				
16				
17				
18				
19				
20				
21				
22				
23				
24				
25				
26	SFB16	SFB17	SFB18	SFB19
27	SFB12	SFB13	SFB14	SFB15
28	SFB8	SFB9	SFB10	SFB11
29	SFB4	SFB5	SFB6	SFB7
30	SFB0	SFB1	SFB2	SFB3
31	GND	GND		
32	GND	GND		

	A	B	C	D
1				
2				
3	MY IN 28	MY IN 29		
4	MY IN 24	MY IN 25	MY IN 26	MY IN 27
5	MY IN 20	MY IN 21	MY IN 22	MY IN 23
6				
7				
8				
9				
10				
11				
12				
13	MY IN 18	MY IN 19		
14	MY IN 16	MY IN 17		
15	MY IN 14	MY IN 15		
16	MY IN 12	MY IN 13		
17	MY IN 10	MY IN 11		
18	CKMSK 18	CKMSK 19		
19	CKMSK 14	CKMSK 15	CKMSK 16	CKMSK 17
20	CKMSK 10	CKMSK 11	CKMSK 12	CKMSK 13
21	CKMSK 26	CKMSK 27	CKMSK 28	CKMSK 29
22	CKMSK 22	CKMSK 23	CKMSK 24	CKMSK 25
23	WSLD 112	WSLD 113	CKMSK 20	CKMSK 21
24	WSLD 1 8	WSLD 1 9	WSLD 110	WSLD 111
25	WSLD 1 4	WSLD 1 5	WSLD 1 6	WSLD 1 7
26	WSLD 1 0	WSLD 1 1	WSLD 1 2	WSLD 1 3
27	WSLD 210	WSLD 211	WSLD 212	WSLD 213
28	WSLD 2 6	WSLD 2 7	WSLD 2 8	WSLD 2 9
29	WSLD 2 2	WSLD 2 3	WSLD 2 4	WSLD 2 5
30			WSLD 2 0	WSLD 2 1
31	GND	GND		
32	GND	GND		

	A	B	C
1	GND	GND	GND
2			
3			
4			
5			
6			
7			
8			
9			
10			
11			
12			
13			
14			
15			
16			
17			
18			
19			
20			
21			
22			
23			
24			
25			
26	MY OUT 17	MY OUT 18	MY OUT 19
27	MY OUT 14	MY OUT 15	MY OUT 16
28	MY OUT 11	MY OUT 12	MY OUT 13
29	MY OUT 28	MY OUT 29	MY OUT 10
30	MY OUT 25	MY OUT 26	MY OUT 27
31	MY OUT 22	MY OUT 23	MY OUT 24
32	GND	MY OUT 20	MY OUT 21

14
MEMORY

(1C) XPT-3/ ADC-9(D2/ DVS-6000) XPT-3 (D1/ DVS-6000C)

	A	B	C	D
1	+5V(B)	RDATA : L	RDATA : H	-5V
2	+5V(B)	WDATA : L	WDATA : H	-5V
3	+5V(B)	ADD : L	ADD : H	FUSE -
4	+5V(B)	CKD : L	CKD : H	CKX
5	FUSE +	RST	LALT	VD
6	THERMO	SC	HBLK	HZ
7	GND(SLTAD 1)	(SLTAD 2)	(SLTAD 3)	(SLTAD 4)
8	GND(SLTAD 0)	CF	VBLK	OE
9	GND	GND	GND	CK15(13.5M)
10	GND	GND	GND	CK7(27.0M)
11	AUX1 6	AUX1 7	AUX1 8	AUX1 9
12	AUX1 2	AUX1 3	AUX1 4	AUX1 5
13	AUX4 8	AUX4 9	AUX1 0	AUX1 1
14	AUX4 4	AUX4 5	AUX4 6	AUX4 7
15	AUX4 0	AUX4 1	AUX4 2	AUX4 3
16	PVW 6	PVW 7	PVW 8	PVW 9
17	PVW 2	PVW 3	PVW 4	PVW 5
18	AUX2 8	AUX2 9	PVW 0	PVW 1
19	AUX2 4	AUX2 5	AUX2 6	AUX2 7
20	AUX2 0	AUX2 1	AUX2 2	AUX2 3
21	AUX3 6	AUX3 7	AUX3 8	AUX3 9
22	AUX3 2	AUX3 3	AUX3 4	AUX3 5
23	AUX5 8	AUX5 9	AUX3 0	AUX3 1
24	AUX5 4	AUX5 5	AUX5 6	AUX5 7
25	AUX5 0	AUX5 1	AUX5 2	AUX5 3
26	AUX6 6	AUX6 7	AUX6 8	AUX6 9
27	AUX6 2	AUX6 3	AUX6 4	AUX6 5
28	FILL D8	FILL D9	AUX6 0	AUX6 1
29	FILL D4	FILL D5	FILL D6	FILL D7
30	FILL D0	FILL D1	FILL D2	FILL D3
31	GND	GND	KYSR 2 18	KYSR 2 19
32	GND	GND	KYSR 2 16	KYSR 2 17

	A	B	C	D
1	KYSR 2 12	KYSR 2 13	KYSR 2 14	KYSR 2 15
2	KYSR 1 18	KYSR 1 19	KYSR 2 10	KYSR 2 11
3	KYSR 1 14	KYSR 1 15	KYSR 1 16	KYSR 1 17
4	KYSR 1 10	KYSR 1 11	KYSR 1 12	KYSR 1 13
5	KYSR D6	KYSR D7	KYSR D8	KYSR D9
6	KYSR D2	KYSR D3	KYSR D4	KYSR D5
7	KYSR 2 28	KYSR 2 29	KYSR D0	KYSR D1
8	KYSR 2 24	KYSR 2 25	KYSR 2 26	KYSR 2 27
9	KYSR 2 20	KYSR 2 21	KYSR 2 22	KYSR 2 23
10	KYSR 1 26	KYSR 1 27	KYSR 1 28	KYSR 1 29
11	KYSR 1 22	KYSR 1 23	KYSR 1 24	KYSR 1 25
12	BKGD A 28	BKGD A 29	KYSR 1 20	KYSR 1 21
13	BKGD A 24	BKGD A 25	BKGD A 26	BKGD A 27
14	BKGD A 20	BKGD A 21	BKGD A 22	BKGD A 23
15	BKGD B 26	BKGD B 27	BKGD B 28	BKGD B 29
16	BKGD B 22	BKGD B 23	BKGD B 24	BKGD B 25
17	FILL 2 28	FILL 2 29	BKGD B 20	BKGD B 21
18	FILL 2 24	FILL 2 25	FILL 2 26	FILL 2 27
19	FILL 2 20	FILL 2 21	FILL 2 22	FILL 2 23
20	FILL 1 26	FILL 1 27	FILL 1 28	FILL 1 29
21	FILL 1 22	FILL 1 23	FILL 1 24	FILL 1 25
22	BKGD A 18	BKGD A 19	FILL 1 20	FILL 1 21
23	BKGD A 14	BKGD A 15	BKGD A 16	BKGD A 17
24	BKGD A 10	BKGD A 11	BKGD A 12	BKGD A 13
25	BKGD B 16	BKGD B 17	BKGD B 18	BKGD B 19
26	BKGD B 12	BKGD B 13	BKGD B 14	BKGD B 15
27	FILL 2 18	FILL 2 19	BKGD B 10	BKGD B 11
28	FILL 2 14	FILL 2 15	FILL 2 16	FILL 2 17
29	FILL 2 10	FILL 2 11	FILL 2 12	FILL 2 13
30	FILL 1 16	FILL 1 17	FILL 1 18	FILL 1 19
31	GND	GND	FILL 1 14	FILL 1 15
32	GND	GND	FILL 1 12	FILL 1 13

	A	B	C
1	GND	GND	GND
2	MASK 39	FILL 1 10	FILL 1 11
3	MASK 36	MASK 37	MASK 38
4	MASK 33	MASK 34	MASK 35
5	MASK 30	MASK 31	MASK 32
6	MASK 27	MASK 28	MASK 29
7	MASK 24	MASK 25	MASK 26
8	MASK 21	MASK 22	MASK 23
9	MASK 18	MASK 19	MASK 20
10	MASK 15	MASK 16	MASK 17
11	MASK 12	MASK 13	MASK 14
12	GND	MASK 10	MASK 11
13	GND	GND	GND
14	GND	GND	GND
15	GND	GND	GND
16	GND	GND	GND
17	GND	GND	GND
18	GND	INPUT 18	GND
19	GND	GND	GND
20	GND	INPUT 17	GND
21	GND	GND	GND
22	GND	INPUT 16	GND
23	GND	GND	GND
24	GND	INPUT 15	GND
25	GND	GND	GND
26	GND	INPUT 14	GND
27	GND	GND	GND
28	GND	INPUT 13	GND
29	GND	GND	GND
30	GND	INPUT 12	GND
31	GND	GND	GND
32	GND	INPUT 11	GND

15
PRI INPUT 1

(1D) XPT-3/ ADC-9(D2/ DVS-6000) XPT-3 (D1/ DVS-6000C)

	A	B	C	D
1	+5V(B)	RDATA : L	RDATA : H	-5V
2	+5V(B)	WDATA : L	WDATA : H	-5V
3	+5V(B)	ADD : L	ADD : H	FUSE -
4	+5V(B)	CKD : L	CKD : H	CKX
5	FUSE +	RST	LALT	VD
6	THERMO	SC	HBLK	HZ
7	GND(SLTAD 1)	(SLTAD 2)	(SLTAD 3)	(SLTAD 4)
8	(SLTAD 0)	CF	VBLK	OE
9	GND	GND	GND	CK15(13.5M)
10	GND	GND	GND	CK7(27.0M)
11	AUX1 6	AUX1 7	AUX1 8	AUX1 9
12	AUX1 2	AUX1 3	AUX1 4	AUX1 5
13	AUX4 8	AUX4 9	AUX1 0	AUX1 1
14	AUX4 4	AUX4 5	AUX4 6	AUX4 7
15	AUX4 0	AUX4 1	AUX4 2	AUX4 3
16	PVW 6	PVW 7	PVW 8	PVW 9
17	PVW 2	PVW 3	PVW 4	PVW 5
18	AUX2 8	AUX2 9	PVW 0	PVW 1
19	AUX2 4	AUX2 5	AUX2 6	AUX2 7
20	AUX2 0	AUX2 1	AUX2 2	AUX2 3
21	AUX3 6	AUX3 7	AUX3 8	AUX3 9
22	AUX3 2	AUX3 3	AUX3 4	AUX3 5
23	AUX5 8	AUX5 9	AUX3 0	AUX3 1
24	AUX5 4	AUX5 5	AUX5 6	AUX5 7
25	AUX5 0	AUX5 1	AUX5 2	AUX5 3
26	AUX6 6	AUX6 7	AUX6 8	AUX6 9
27	AUX6 2	AUX6 3	AUX6 4	AUX6 5
28	FILL D8	FILL D9	AUX6 0	AUX6 1
29	FILL D4	FILL D5	FILL D6	FILL D7
30	FILL D0	FILL D1	FILL D2	FILL D3
31	GND	GND	KYSR 2 18	KYSR 2 19
32	GND	GND	KYSR 2 16	KYSR 2 17

	A	B	C	D
1	KYSR 2 12	KYSR 2 13	KYSR 2 14	KYSR 2 15
2	KYSR 1 18	KYSR 1 19	KYSR 2 10	KYSR 2 11
3	KYSR 1 14	KYSR 1 15	KYSR 1 16	KYSR 1 17
4	KYSR 1 10	KYSR 1 11	KYSR 1 12	KYSR 1 13
5	KYSR D6	KYSR D7	KYSR D8	KYSR D9
6	KYSR D2	KYSR D3	KYSR D4	KYSR D5
7	KYSR 2 28	KYSR 2 29	KYSR D0	KYSR D1
8	KYSR 2 24	KYSR 2 25	KYSR 2 26	KYSR 2 27
9	KYSR 2 20	KYSR 2 21	KYSR 2 22	KYSR 2 23
10	KYSR 1 26	KYSR 1 27	KYSR 1 28	KYSR 1 29
11	KYSR 1 22	KYSR 1 23	KYSR 1 24	KYSR 1 25
12	BKGD A 28	BKGD A 29	KYSR 1 20	KYSR 1 21
13	BKGD A 24	BKGD A 25	BKGD A 26	BKGD A 27
14	BKGD A 20	BKGD A 21	BKGD A 22	BKGD A 23
15	BKGD B 26	BKGD B 27	BKGD B 28	BKGD B 29
16	BKGD B 22	BKGD B 23	BKGD B 24	BKGD B 25
17	FILL 2 28	FILL 2 29	BKGD B 20	BKGD B 21
18	FILL 2 24	FILL 2 25	FILL 2 26	FILL 2 27
19	FILL 2 20	FILL 2 21	FILL 2 22	FILL 2 23
20	FILL 1 26	FILL 1 27	FILL 1 28	FILL 1 29
21	FILL 1 22	FILL 1 23	FILL 1 24	FILL 1 25
22	BKGD A 18	BKGD A 19	FILL 1 20	FILL 1 21
23	BKGD A 14	BKGD A 15	BKGD A 16	BKGD A 17
24	BKGD A 10	BKGD A 11	BKGD A 12	BKGD A 13
25	BKGD B 16	BKGD B 17	BKGD B 18	BKGD B 19
26	BKGD B 12	BKGD B 13	BKGD B 14	BKGD B 15
27	FILL 2 18	FILL 2 19	BKGD B 10	BKGD B 11
28	FILL 2 14	FILL 2 15	FILL 2 16	FILL 2 17
29	FILL 2 10	FILL 2 11	FILL 2 12	FILL 2 13
30	FILL 1 16	FILL 1 17	FILL 1 18	FILL 1 19
31	GND	GND	FILL 1 14	FILL 1 15
32	GND	GND	FILL 1 12	FILL 1 13

	A	B	C
1	GND	GND	GND
2	MASK 39	FILL 1 10	FILL 1 11
3	MASK 36	MASK 37	MASK 38
4	MASK 33	MASK 34	MASK 35
5	MASK 30	MASK 31	MASK 32
6	MASK 27	MASK 28	MASK 29
7	MASK 24	MASK 25	MASK 26
8	MASK 21	MASK 22	MASK 23
9	MASK 18	MASK 19	MASK 20
10	MASK 15	MASK 16	MASK 17
11	MASK 12	MASK 13	MASK 14
12	GND	MASK 10	MASK 11
13	GND	GND	GND
14	GND	GND	GND
15	GND	GND	GND
16	GND	GND	GND
17	GND	GND	GND
18	GND	INPUT 28	GND
19	GND	GND	GND
20	GND	INPUT 27	GND
21	GND	GND	GND
22	GND	INPUT 26	GND
23	GND	GND	GND
24	GND	INPUT 25	GND
25	GND	GND	GND
26	GND	INPUT 24	GND
27	GND	GND	GND
28	GND	INPUT 23	GND
29	GND	GND	GND
30	GND	INPUT 22	GND
31	GND	GND	GND
32	GND	INPUT 21	GND

16
PRI INPUT 2

MB-482 BOARD (4 / 8)
BOARD NO.1-646-031-11
DVS-6000/6000C

A B C D E F G H

MB-482(5/8);MOTHER BOARD

(16)

XPT-3/ADC-9(D2/DVS-6000)
XPT-3 (D1/DVS-6000C)

	A	B	C	D
1	+5V(B)	RDATA : L	RDATA : H	-5V
2	+5V(B)	WDATA : L	WDATA : H	-5V
3	+5V(B)	ADD : L	ADD : H	FUSE -
4	+5V(B)	CKD : L	CKD : H	CKX
5	FUSE +	RST	LALT	VD
6	THERMO	SC	HBLK	HZ
7	(SLTAD 1)	(SLTAD 2)	GND(SLTAD 3)	(SLTAD 4)
8	GND(SLTAD 0)	CF	VBLK	OE
9	GND	GND	GND	CK16(13.5M)
10	GND	GND	GND	CK8(27.0M)
11	AUX1 6	AUX1 7	AUX1 8	AUX1 9
12	AUX1 2	AUX1 3	AUX1 4	AUX1 5
13	AUX4 8	AUX4 9	AUX1 0	AUX1 1
14	AUX4 4	AUX4 5	AUX4 6	AUX4 7
15	AUX4 0	AUX4 1	AUX4 2	AUX4 3
16	PVW 6	PVW 7	PVW 8	PVW 9
17	PVW 2	PVW 3	PVW 4	PVW 5
18	AUX2 8	AUX2 9	PVW 0	PVW 1
19	AUX2 4	AUX2 5	AUX2 6	AUX2 7
20	AUX2 0	AUX2 1	AUX2 2	AUX2 3
21	AUX3 6	AUX3 7	AUX3 8	AUX3 9
22	AUX3 2	AUX3 3	AUX3 4	AUX3 5
23	AUX5 8	AUX5 9	AUX3 0	AUX3 1
24	AUX5 4	AUX5 5	AUX5 6	AUX5 7
25	AUX5 0	AUX5 1	AUX5 2	AUX5 3
26	AUX6 6	AUX6 7	AUX6 8	AUX6 9
27	AUX6 2	AUX6 3	AUX6 4	AUX6 5
28	FILL D8	FILL D9	AUX6 0	AUX6 1
29	FILL D4	FILL D5	FILL D6	FILL D7
30	FILL D0	FILL D1	FILL D2	FILL D3
31	GND	GND	KYSR 2 18	KYSR 2 19
32	GND	GND	KYSR 2 16	KYSR 2 17

(1F)

XPT-3/ADC-9(D2/DVS-6000)
XPT-3 (D1/DVS-6000C)

	A	B	C	D
1	+5V(B)	RDATA : L	RDATA : H	-5V
2	+5V(B)	WDATA : L	WDATA : H	-5V
3	+5V(B)	ADD : L	ADD : H	FUSE -
4	+5V(B)	CKD : L	CKD : H	CKX
5	FUSE +	RST	LALT	VD
6	THERMO	SC	HBLK	HZ
7	(SLTAD 1)	(SLTAD 2)	(SLTAD 3)	(SLTAD 4)
8	(SLTAD 0)	CF	VBLK	OE
9	GND	GND	GND	CK16(13.5M)
10	GND	GND	GND	CK8(27.0M)
11	AUX1 6	AUX1 7	AUX1 8	AUX1 9
12	AUX1 2	AUX1 3	AUX1 4	AUX1 5
13	AUX4 8	AUX4 9	AUX1 0	AUX1 1
14	AUX4 4	AUX4 5	AUX4 6	AUX4 7
15	AUX4 0	AUX4 1	AUX4 2	AUX4 3
16	PVW 6	PVW 7	PVW 8	PVW 9
17	PVW 2	PVW 3	PVW 4	PVW 5
18	AUX2 8	AUX2 9	PVW 0	PVW 1
19	AUX2 4	AUX2 5	AUX2 6	AUX2 7
20	AUX2 0	AUX2 1	AUX2 2	AUX2 3
21	AUX3 6	AUX3 7	AUX3 8	AUX3 9
22	AUX3 2	AUX3 3	AUX3 4	AUX3 5
23	AUX5 8	AUX5 9	AUX3 0	AUX3 1
24	AUX5 4	AUX5 5	AUX5 6	AUX5 7
25	AUX5 0	AUX5 1	AUX5 2	AUX5 3
26	AUX6 6	AUX6 7	AUX6 8	AUX6 9
27	AUX6 2	AUX6 3	AUX6 4	AUX6 5
28	FILL D8	FILL D9	AUX6 0	AUX6 1
29	FILL D4	FILL D5	FILL D6	FILL D7
30	FILL D0	FILL D1	FILL D2	FILL D3
31	GND	GND	KYSR 2 18	KYSR 2 19
32	GND	GND	KYSR 2 16	KYSR 2 17

X

	A	B	C	D
1	KYSR 2 12	KYSR 2 13	KYSR 2 14	KYSR 2 15
2	KYSR 1 18	KYSR 1 19	KYSR 2 10	KYSR 2 11
3	KYSR 1 14	KYSR 1 15	KYSR 1 16	KYSR 1 17
4	KYSR 1 10	KYSR 1 11	KYSR 1 12	KYSR 1 13
5	KYSR D6	KYSR D7	KYSR D8	KYSR D9
6	KYSR D2	KYSR D3	KYSR D4	KYSR D5
7	KYSR 2 28	KYSR 2 29	KYSR D0	KYSR D1
8	KYSR 2 24	KYSR 2 25	KYSR 2 26	KYSR 2 27
9	KYSR 2 20	KYSR 2 21	KYSR 2 22	KYSR 2 23
10	KYSR 1 26	KYSR 1 27	KYSR 1 28	KYSR 1 29
11	KYSR 1 22	KYSR 1 23	KYSR 1 24	KYSR 1 25
12	BKGD A 28	BKGD A 29	KYSR 1 20	KYSR 1 21
13	BKGD A 24	BKGD A 25	BKGD A 26	BKGD A 27
14	BKGD A 20	BKGD A 21	BKGD A 22	BKGD A 23
15	BKGD B 26	BKGD B 27	BKGD B 28	BKGD B 29
16	BKGD B 22	BKGD B 23	BKGD B 24	BKGD B 25
17	FILL 2 28	FILL 2 29	BKGD B 20	BKGD B 21
18	FILL 2 24	FILL 2 25	FILL 2 26	FILL 2 27
19	FILL 2 20	FILL 2 21	FILL 2 22	FILL 2 23
20	FILL 1 26	FILL 1 27	FILL 1 28	FILL 1 29
21	FILL 1 22	FILL 1 23	FILL 1 24	FILL 1 25
22	BKGD A 18	BKGD A 19	FILL 1 20	FILL 1 21
23	BKGD A 14	BKGD A 15	BKGD A 16	BKGD A 17
24	BKGD A 10	BKGD A 11	BKGD A 12	BKGD A 13
25	BKGD B 16	BKGD B 17	BKGD B 18	BKGD B 19
26	BKGD B 12	BKGD B 13	BKGD B 14	BKGD B 15
27	FILL 2 18	FILL 2 19	BKGD B 10	BKGD B 11
28	FILL 2 14	FILL 2 15	FILL 2 16	FILL 2 17
29	FILL 2 10	FILL 2 11	FILL 2 12	FILL 2 13
30	FILL 1 16	FILL 1 17	FILL 1 18	FILL 1 19
31	GND	GND	FILL 1 14	FILL 1 15
32	GND	GND	FILL 1 12	FILL 1 13

	A	B	C	D
1	KYSR 2 12	KYSR 2 13	KYSR 2 14	KYSR 2 15
2	KYSR 1 18	KYSR 1 19	KYSR 2 10	KYSR 2 11
3	KYSR 1 14	KYSR 1 15	KYSR 1 16	KYSR 1 17
4	KYSR 1 10	KYSR 1 11	KYSR 1 12	KYSR 1 13
5	KYSR D6	KYSR D7	KYSR D8	KYSR D9
6	KYSR D2	KYSR D3	KYSR D4	KYSR D5
7	KYSR 2 28	KYSR 2 29	KYSR D0	KYSR D1
8	KYSR 2 24	KYSR 2 25	KYSR 2 26	KYSR 2 27
9	KYSR 2 20	KYSR 2 21	KYSR 2 22	KYSR 2 23
10	KYSR 1 26	KYSR 1 27	KYSR 1 28	KYSR 1 29
11	KYSR 1 22	KYSR 1 23	KYSR 1 24	KYSR 1 25
12	BKGD A 28	BKGD A 29	KYSR 1 20	KYSR 1 21
13	BKGD A 24	BKGD A 25	BKGD A 26	BKGD A 27
14	BKGD A 20	BKGD A 21	BKGD A 22	BKGD A 23
15	BKGD B 26	BKGD B 27	BKGD B 28	BKGD B 29
16	BKGD B 22	BKGD B 23	BKGD B 24	BKGD B 25
17	FILL 2 28	FILL 2 29	BKGD B 20	BKGD B 21
18	FILL 2 24	FILL 2 25	FILL 2 26	FILL 2 27
19	FILL 2 20	FILL 2 21	FILL 2 22	FILL 2 23
20	FILL 1 26	FILL 1 27	FILL 1 28	FILL 1 29
21	FILL 1 22	FILL 1 23	FILL 1 24	FILL 1 25
22	BKGD A 18	BKGD A 19	FILL 1 20	FILL 1 21
23	BKGD A 14	BKGD A 15	BKGD A 16	BKGD A 17
24	BKGD A 10	BKGD A 11	BKGD A 12	BKGD A 13
25	BKGD B 16	BKGD B 17	BKGD B 18	BKGD B 19
26	BKGD B 12	BKGD B 13	BKGD B 14	BKGD B 15
27	FILL 2 18	FILL 2 19	BKGD B 10	BKGD B 11
28	FILL 2 14	FILL 2 15	FILL 2 16	FILL 2 17
29	FILL 2 10	FILL 2 11	FILL 2 12	FILL 2 13
30	FILL 1 16	FILL 1 17	FILL 1 18	FILL 1 19
31	GND	GND	FILL 1 14	FILL 1 15
32	GND	GND	FILL 1 12	FILL 1 13

Y

	A	B	C
1	GND	GND	GND
2	MASK 39	FILL 1 10	FILL 1 11
3	MASK 36	MASK 37	MASK 38
4	MASK 33	MASK 34	MASK 35
5	MASK 30	MASK 31	MASK 32
6	MASK 27	MASK 28	MASK 29
7	MASK 24	MASK 25	MASK 26
8	MASK 21	MASK 22	MASK 23
9	MASK 18	MASK 19	MASK 20
10	MASK 15	MASK 16	MASK 17
11	MASK 12	MASK 13	MASK 14
12	GND	MASK 10	MASK 11
13	GND	GND	GND
14	GND	GND	GND
15	GND	GND	GND
16	GND	GND	GND
17	GND	GND	GND
18	GND	INPUT 38	GND
19	GND	GND	GND
20	GND	INPUT 37	GND
21	GND	GND	GND
22	GND	INPUT 36	GND
23	GND	GND	GND
24	GND	INPUT 35	GND
25	GND	GND	GND
26	GND	INPUT 34	GND
27	GND	GND	GND
28	GND	INPUT 33	GND
29	GND	GND	GND
30	GND	INPUT 32	GND
31	GND	GND	GND
32	GND	INPUT 31	GND

17
PRI INPUT 3

	A	B	C
1	GND	GND	GND
2	MASK 39	FILL 1 10	FILL 1 11
3	MASK 36	MASK 37	MASK 38
4	MASK 33	MASK 34	MASK 35
5	MASK 30	MASK 31	MASK 32
6	MASK 27	MASK 28	MASK 29
7	MASK 24	MASK 25	MASK 26
8	MASK 21	MASK 22	MASK 23
9	MASK 18	MASK 19	MASK 20
10	MASK 15	MASK 16	MASK 17
11	MASK 12	MASK 13	MASK 14
12	GND	MASK 10	MASK 11
13	GND	GND	GND
14	GND	GND	GND
15	GND	GND	GND
16	GND	GND	GND
17	GND	GND	GND
18	GND	INPUT 48	GND
19	GND	GND	GND
20	GND	INPUT 47	GND
21	GND	GND	GND
22	GND	INPUT 46	GND
23	GND	GND	GND
24	GND	INPUT 45	GND
25	GND	GND	GND
26	GND	INPUT 44	GND
27	GND	GND	GND
28	GND	INPUT 43	GND
29	GND	GND	GND
30	GND	INPUT 42	GND
31	GND	GND	GND
32	GND	INPUT 41	GND

18
PRI INPUT 4

Z

MB-482 BOARD (5/8)
BOARD NO.1-646-031-11
DVS-6000/6000C

A B C D E F G H

MB-482(5/8) MB-482(5/8)

1

2

3

4

5

I J K L M N O P

MB-482(6/8);MOTHER BOARD

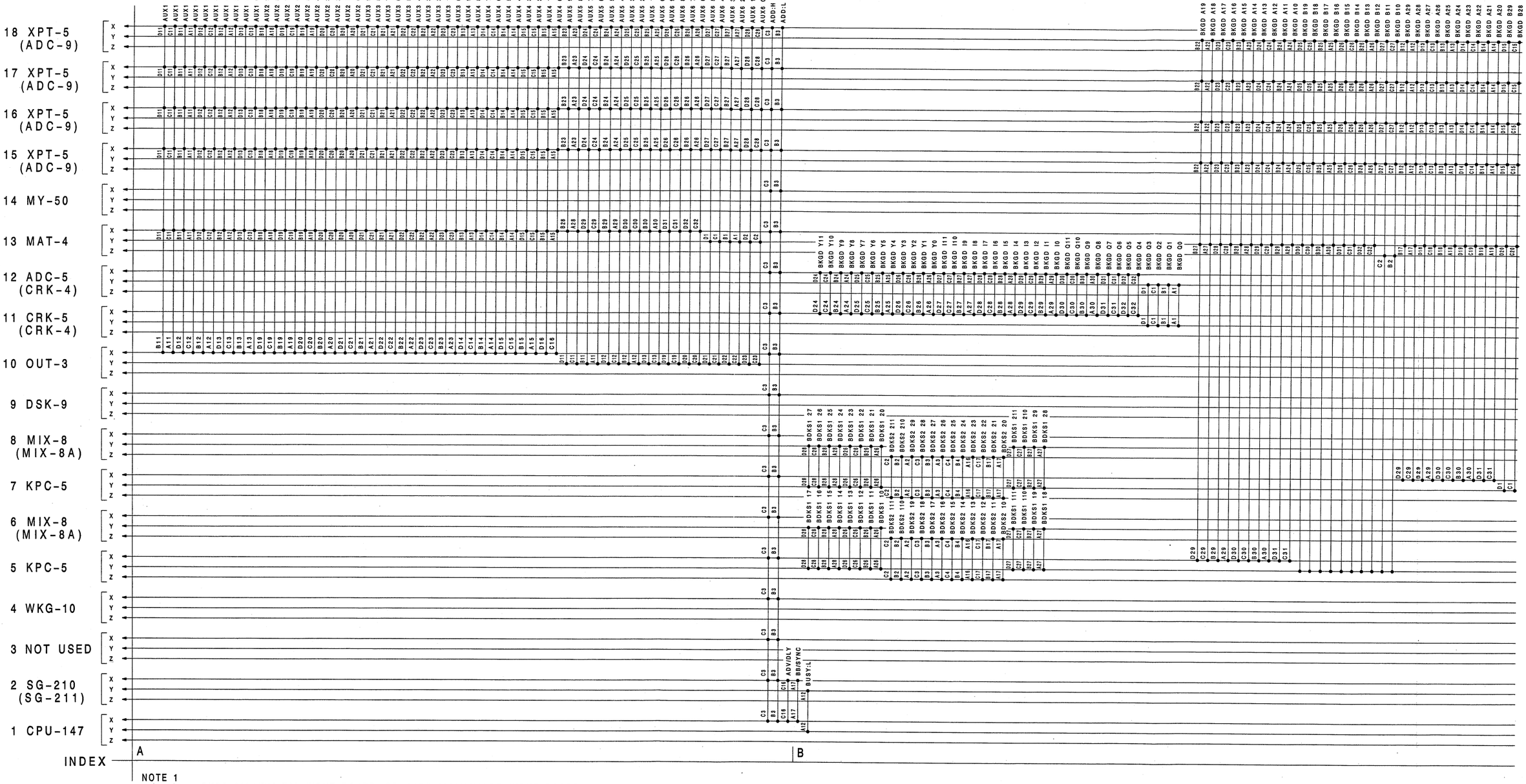

NOTE 1
(*1) ···· BKDS-8022(DIGITAL INPUT BOARD) OR BKDS-8021(ANALOG INPUT BOARD)
(*2) ···· BKDS-8040(FRAME MEMORY BOARD)
(*3) ···· BKDS-8030(CLEAN CHROMA KEY BOARD)

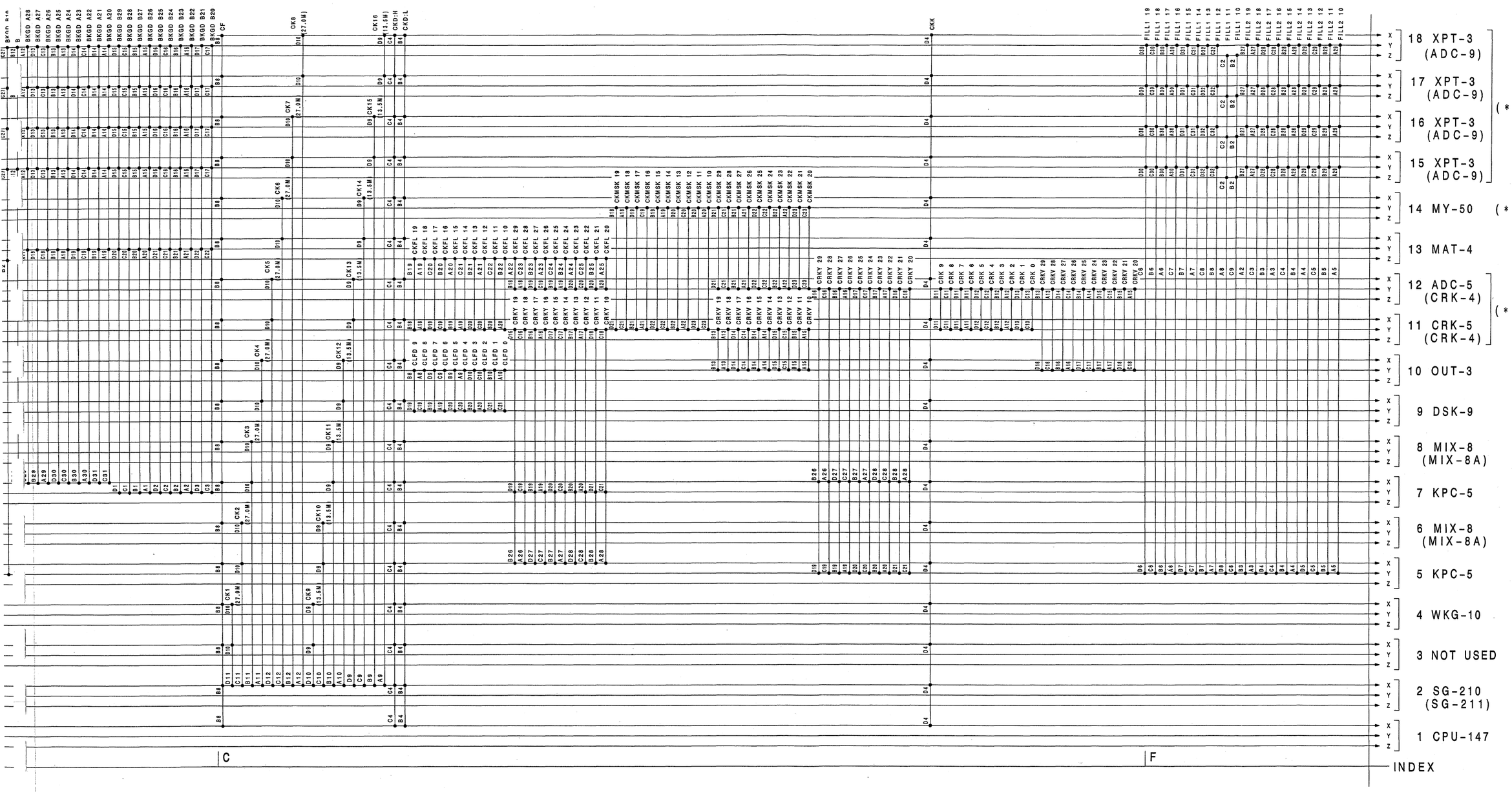

MB-482 BOARD (6/8)

BOARD NO.1-646-031-11
DVS-6000/6000C

MB-482(7/8);MOTHER BOARD

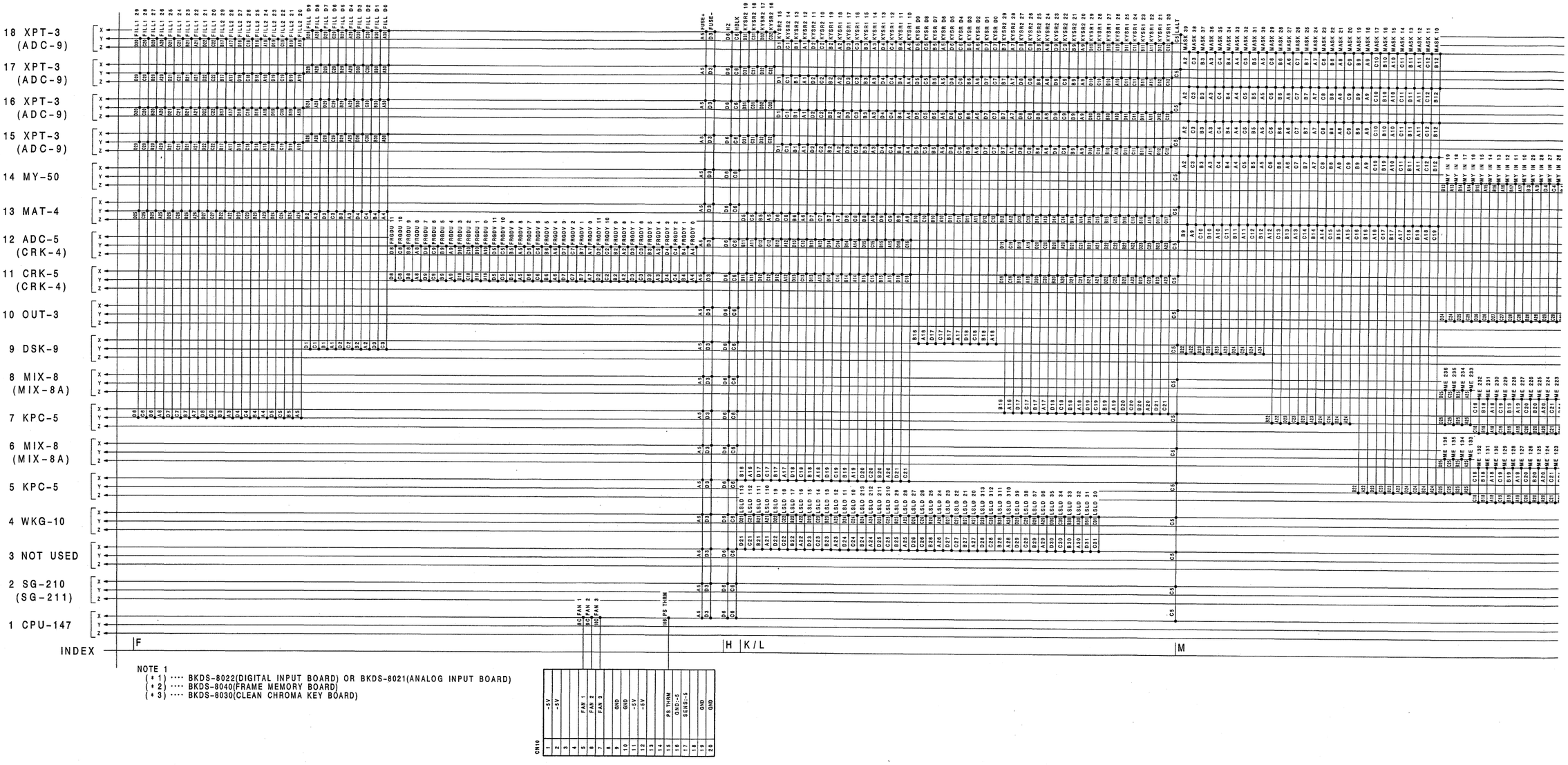

NOTE 1
(*1) ···· BKDS-8022(DIGITAL INPUT BOARD) OR BKDS-8021(ANALOG INPUT BOARD)
(*2) ···· BKDS-8040(FRAME MEMORY BOARD)
(*3) ···· BKDS-8030(CLEAN CHROMA KEY BOARD)

MB-482(7/8)

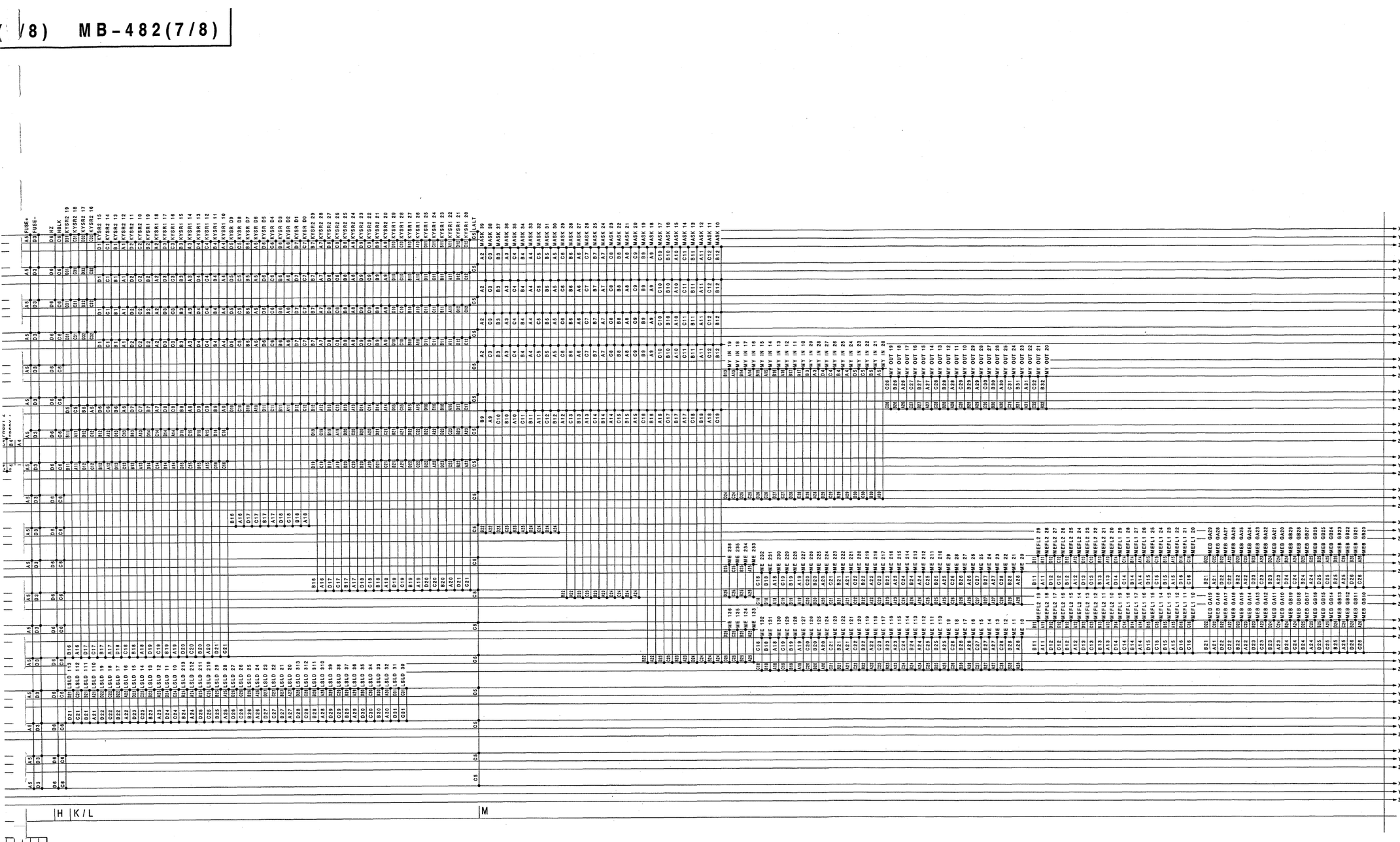

MB-482 BOARD (7/8)

BOARD NO.1-646-031-11
DVS-6000/6000C

MB-482(8/8) MB-48

MB-482(8/8);MOTHER BOARD

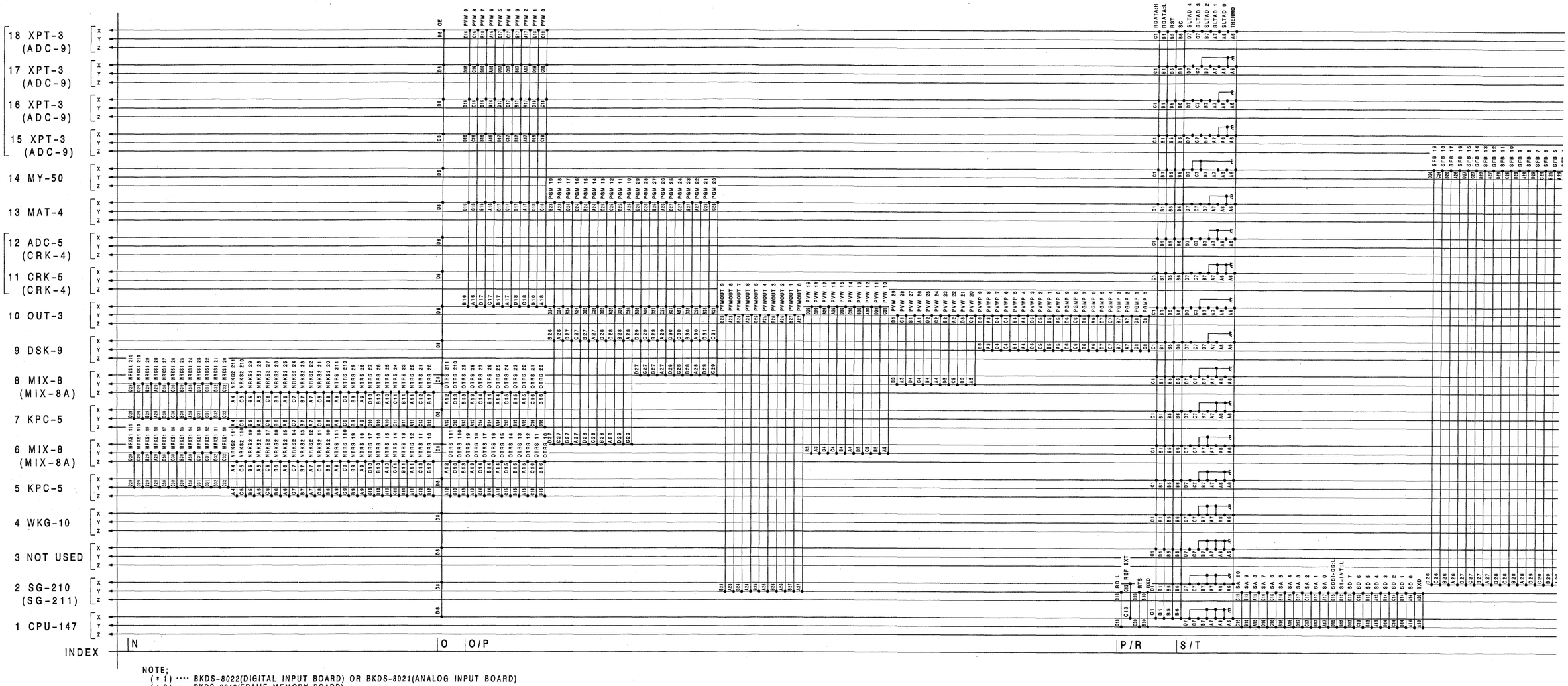

NOTE;
(*1) ···· BKDS-8022(DIGITAL INPUT BOARD) OR BKDS-8021(ANALOG INPUT BOARD)
(*2) ···· BKDS-8040(FRAME MEMORY BOARD)
(*3) ···· BKDS-8030(CLEAN CHROMA KEY BOARD)

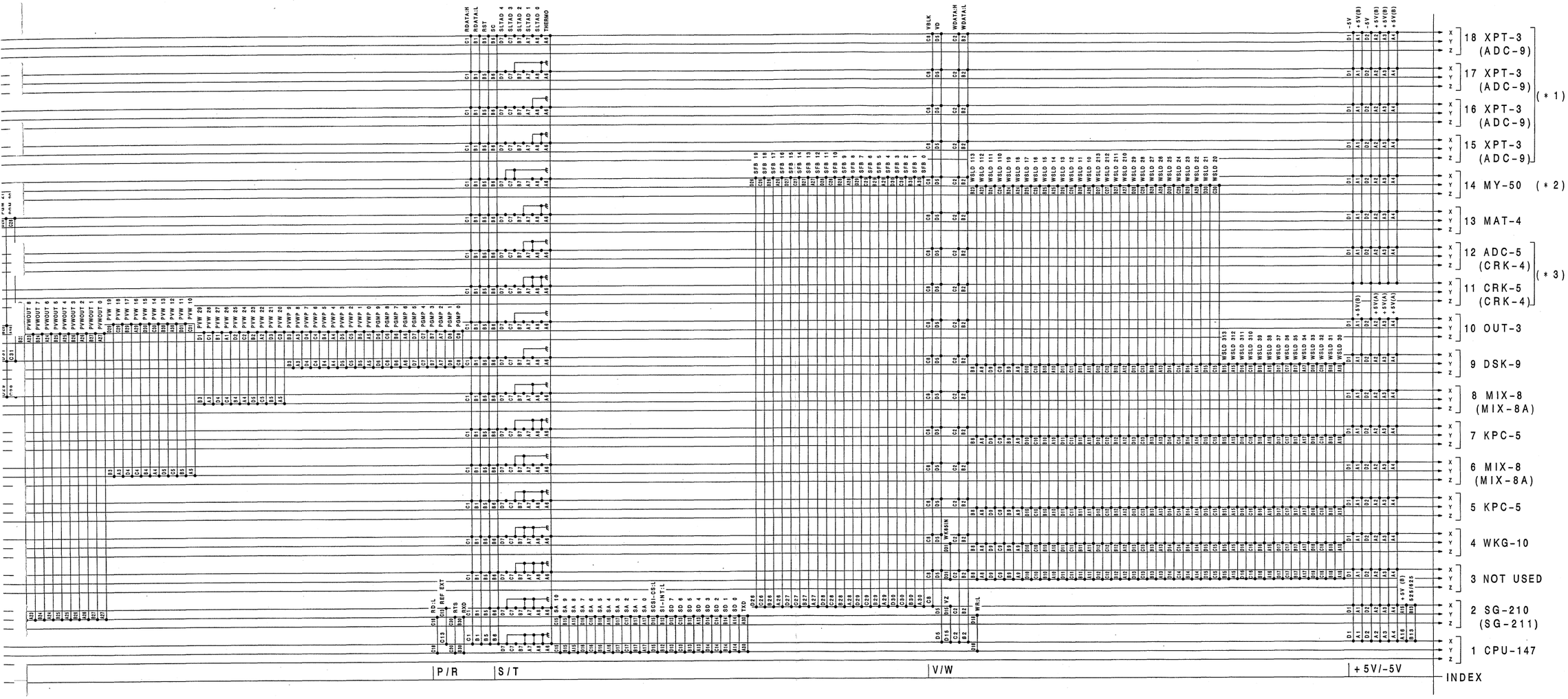

MB-482 BOARD (8/8)

BOARD NO.1-646-031-11
DVS-6000/6000C

RE-96;POWER SUPPLY AC-DC BOARD

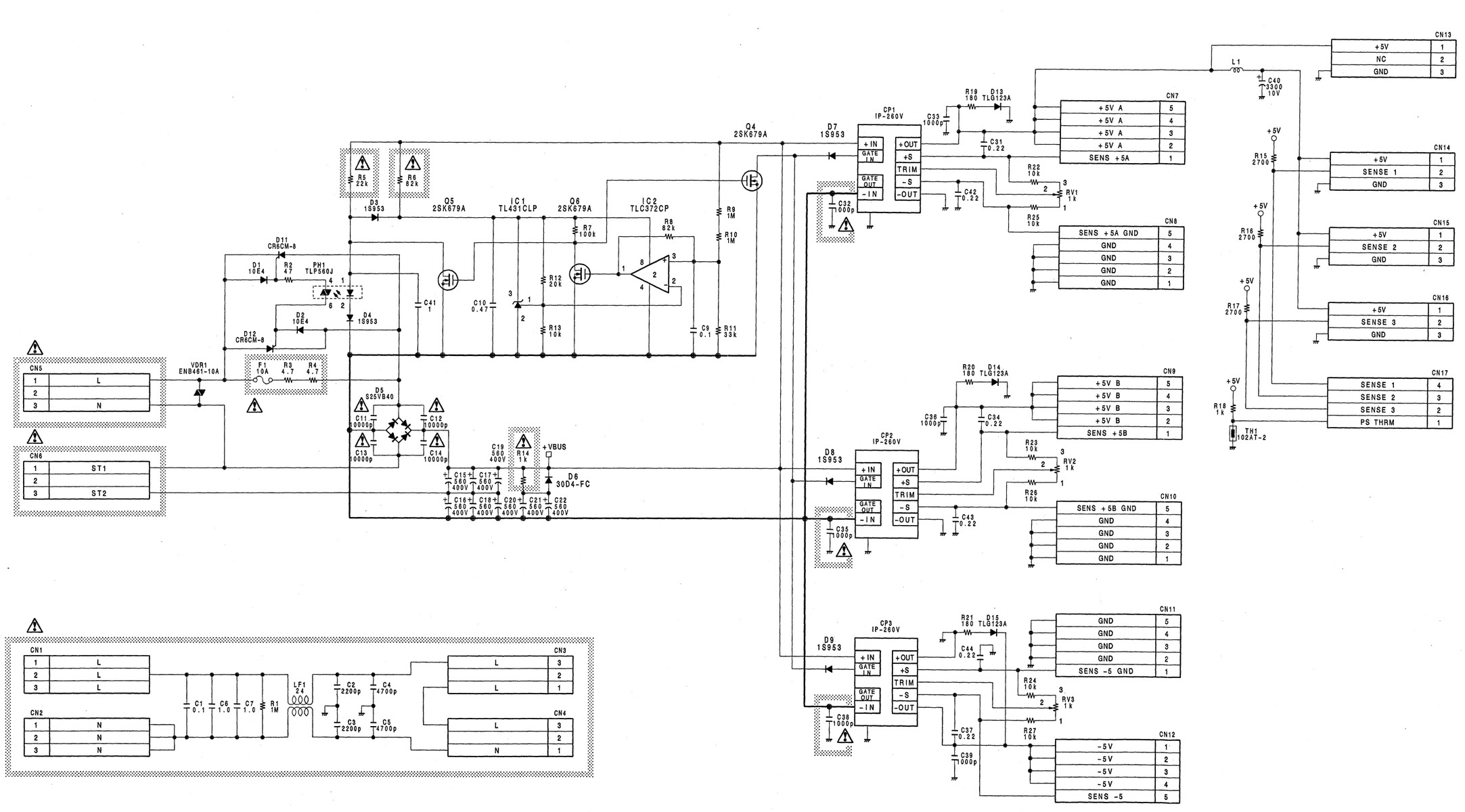

RE-96 BOARD
BOARD NO.1-646-847-11
DVS-6000/6000C

FRAME

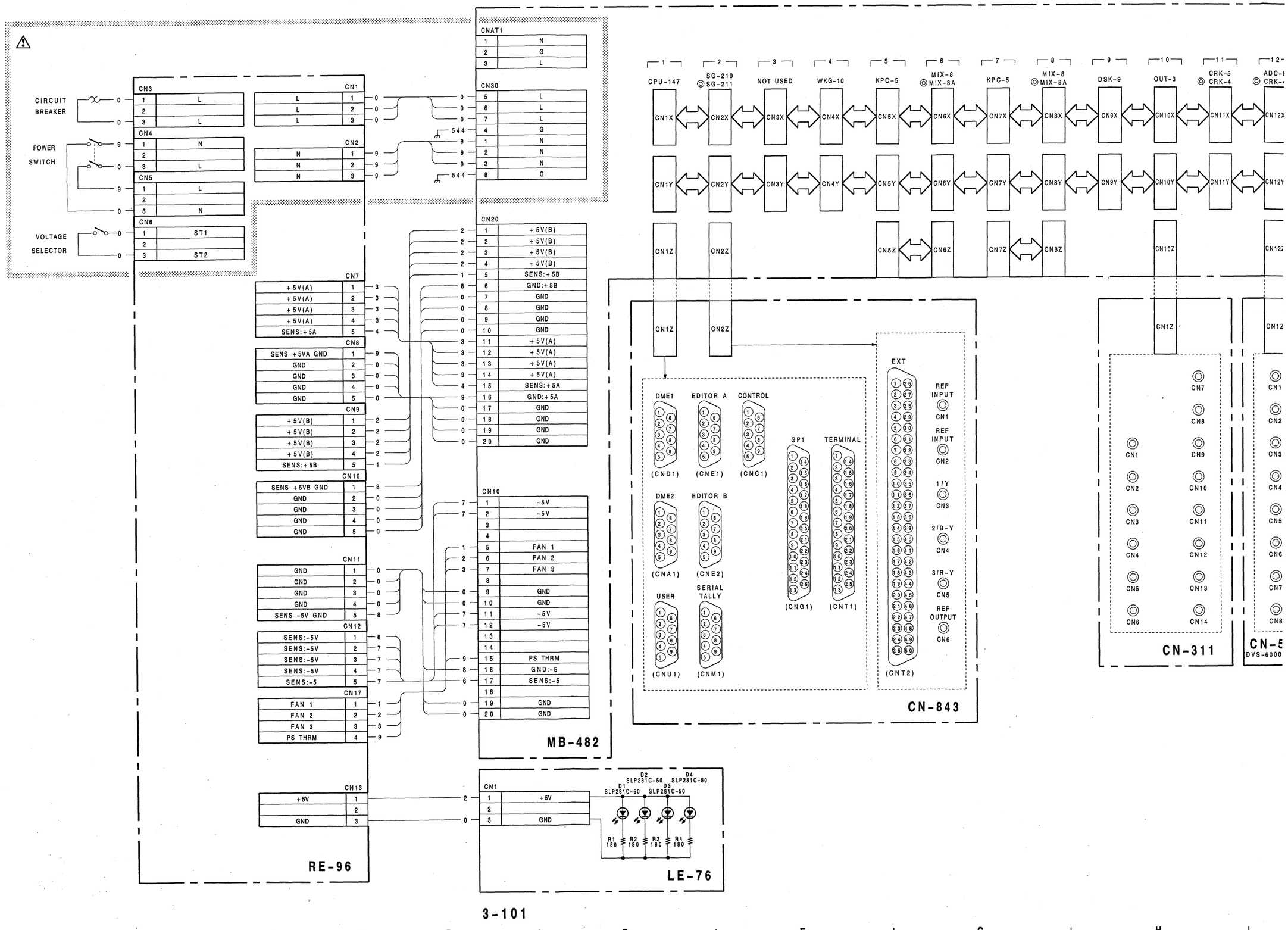
CIRCUIT BREAKER
POWER SWITCH
VOLTAGE SELECTOR
CN3
CN4
CN5
CN6
CN1
CN2
CNAT1
CN30
CN7
CN8
CN9
CN10
CN11
CN12
CN17
CN13
CN20
RE-96
MB-482
LE-76
CPU-147
SG-210 SG-211
NOT USED
WKG-10
KPC-5
MIX-8 MIX-8A
DSK-9
OUT-3
CRK-5 CRK-4
CN1X
CN2X
CN3X
CN4X
CN5X
CN6X
CN7X
CN8X
CN9X
CN10X
CN11X
CN1Y
CN2Y
CN3Y
CN4Y
CN5Y
CN6Y
CN7Y
CN8Y
CN9Y
CN10Y
CN11Y
CN1Z
CN2Z
CN5Z
CN6Z
CN7Z
CN8Z
CN10Z
DME1
EDITOR A
CONTROL
GP1
TERMINAL
DME2
EDITOR B
USER
SERIAL TALLY
EXT
REF INPUT
1/Y
2/B-Y
3/R-Y
REF OUTPUT
CN-843
CN-311
D1 SLP281C-50
D2 SLP281C-50
D3 SLP281C-50
D4 SLP281C-50
R1 180
R2 180
R3 180
R4 180

3-101

FRAME

No mark = DVS-6000 (D2)
◎ mark = DVS-6000C(D1)

1 CPU-147 — CN1X CN1Y CN1Z
2 SG-210 ◎ SG-211 — CN2X CN2Y CN2Z
3 NOT USED — CN3X CN3Y
4 WKG-10 — CN4X CN4Y
5 KPC-5 — CN5X CN5Y CN5Z
6 MIX-8 ◎ MIX-8A — CN6X CN6Y CN6Z
7 KPC-5 — CN7X CN7Y CN7Z
8 MIX-8 ◎ MIX-8A — CN8X CN8Y CN8Z
9 DSK-9 — CN9X CN9Y
10 OUT-3 — CN10X CN10Y CN10Z
11 CRK-5 ◎ CRK-4 — CN11X CN11Y
12 ADC-5 ◎ CRK-4 — CN12X CN12Y CN12Z
13 MAT-4 — CN13X CN13Y CN13Z
14 MY-50 ◎ MY-51 — CN14X CN14Y CN14Z
15 XPT-3/ADC-9 ◎ XPT-3 — CN15X CN15Y CN15Z
16 XPT-3/ADC-9 ◎ XPT-3 — CN16X CN16Y CN16Z
17 XPT-3/ADC-9 ◎ XPT-3 — CN17X CN17Y CN17Z
18 XPT-3/ADC-9 ◎ XPT-3 — CN18X CN18Y CN18Z

CN-843
DME1 (CND1)
EDITOR A (CNE1)
CONTROL (CNC1)
DME2 (CNA1)
EDITOR B (CNE2)
USER (CNU1)
SERIAL TALLY (CNM1)
GP1 (CNG1)
TERMINAL (CNT1)
EXT (CNT2)
REF INPUT CN1
REF INPUT CN2
1/Y CN3
2/B-Y CN4
3/R-Y CN5
REF OUTPUT CN6

CN-311
CN1 CN2 CN3 CN4 CN5 CN6
CN7 CN8 CN9 CN10 CN11 CN12 CN13 CN14

CN-503 (DVS-6000 ONLY)
CN1 CN2 CN3 CN4 CN5 CN6 CN7 CN8

CN-312(A)
1 (CN1) 2 (CN2) 3 (CN3) 4 (CN4) 5 (CN5) 6 (CN6) 7 (CN7) 8 (CN8)
9 (CN9) 10 (CN10) 11 (CN11) 12 (CN12) 13 (CN13) 14 (CN14) 15 (CN15) 16 (CN16)

CN-312(B)
17 (CN1) 18 (CN2) 19 (CN3) 20 (CN4) 21 (CN5) 22 (CN6) 23 (CN7) 24 (CN8)
25 (CN9) 26 (CN10) 27 (CN11) 28 (CN12) 29 (CN13) 30 (CN14) 31 (CN15) 32 (CN16)

M -482

LE-76
D1 SLP281C-50
D2 SLP281C-50
D3 SLP281C-50
D4 SLP281C-50
R1 180 R2 180 R3 180 R4 180

FRAME
DVS-6000/6000C

SONY

DIGITAL VIDEO SWITCHER

DVS-6000/6000C

SWITCHER CONTROL PANEL

BKDS-6010

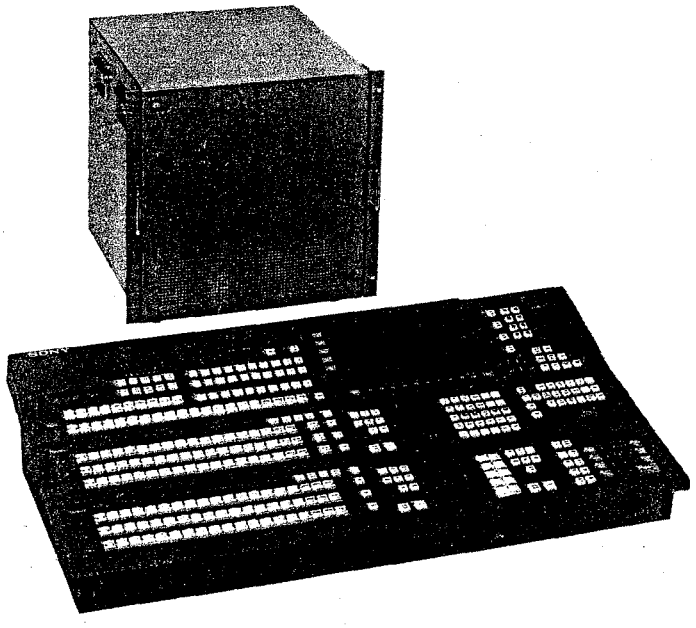

BKDS-6050 BKDS-6060 BKDS-6061 BKDS-6062
BKDS-6063 BKDS-6064 BKDS-6070 BKDS-6071
BKDS-6072 BKDS-6090 BKDS-8022

INSTALLATION AND MAINTENANCE MANUAL Part 2
1st Edition
Serial No. 10001 and Higher

For customers in the U.S.A.

WARNING

This equipment has been tested and found to comply with the limits for a Class A digital device, pursuant to Part 15 of the FCC Rules. These limits are designed to provide reasonable protection against harmful interference when the equipment is operated in a commercial environment. This equipment generates, uses, and can radiate radio frequency energy and, if not installed and used in accordance with the instruction manual, may cause harmful interference to radio communications. Operation of this equipment in a residential area is likely to cause harmful interference in which case the user will be required to correct the interference at his own expense.

You are cautioned that any changes or modifications not expressly approved in this manual could void your authority to operate this equipment.

The shielded interface cable recommended in this manual must be used with this equipment in order to comply with the limits for a digital device pursuant to Subpart B of Part 15 of FCC rules.

This symbol is intended to alert the user to the presence of important operating and maintenance (servicing) instructions in the literature accompanying the appliance.

WARNING
For the customers in the U.S.A.

Changing the voltage selector may require the use of a different line cord or attachment plug, or both. To reduce the risk of fire or electric shock, refer servicing to qualified service personnel.

For the customers in Canada
This apparatus complies with the Class A limits for radio noise emissions set out in radio interference regulations.

Pour les utilisateurs au Canada
Cet appareil est conforme aux normes Classe A, pour bruits radioélectriques. Tel que spécifiér dans le reglement sur le brouillage radioélectrique.

Bescheinigung des Herstellers
Hiermit wird bescheinigt, daß die Digital-Video-Schalteinheit DVS-6000C in Übereinstimmung mit den Bestimmungen der BMPT-Amtsblatt Vfg 243/1991 und Vfg 46/1992 funkenstört ist. Der vorschriftsmäßige Betrieb mancher Geräte (z.B.Meßsender) kann allerdings gewissen Einschränkungen unterliegen. Beachten Sie deshalb die Hinweise in der Bedienungsanleitung. Dem Bundesamt für Zulassungen in der Telekommunikation wurde das inverkehrbringen dieses Gerätes angezeigt und die Berechtigung zur Überprüfung der Serie auf Einhaltung der Bestmmungen eingeräumt.

Sony Deutschland GmbH
Hugo Eckener Str 20
D-5000 Köin 30

Hinweis
Gemäß der Amtsblätter des BMPT Nm. 61/1991 und 6/1992 wird der Betreiber darauf aufmerksam gemacht, daß die von ihm mit diesem Gerät zusammengestellte Anlage auch den technischen Bestimmungen dieser Amtsblätter genügen muß.

SECTION 4
BOARD LAYOUTS

	Board	Function	Page
B	BD-22(BKDS-6071)	Key Border Generator Board	4-23
C	CN-311	Output Connector Board	4-38
	CN-312	Primary Input Connector Board	4-40
	CN-503	Chroma Key Input Connector Board:DVS-6000 ONLY	4-39
	CN-843	Control Connector Board	4-41
	CPU-147	CPU Board	4-2
D	DA-71(BKDS-6061)	Analog Edit PVW/REF Output Board:DVS-6000 ONLY	4-12
	DA-72(BKDS-6062)	Analog Edit PVW/REF Output Board:DVS-6000C ONLY	4-14
	DA-73(BKDS-6064)	Analog Output Board:DVS-6000 ONLY	4-31
	DSK-9	DSK Board	4-26
K	KPC-5	Key Processor Board	4-20
L	LE-118	LED Board	4-9
	LE-76	Power LED Board	4-44
O	OUT-3	Output Processor Board	4-28
R	RE-96	Power Supply AC-DC Board	4-44
S	SD-30(BKDS-6060)	Digital Edit PVW/REF Output Board	4-10
	SD-31(BKDS-6063)	Digital Edit PVW/REF Output Board	4-31
	SG-210	D-2 SYNC Generator Board:DVS-6000 ONLY	4-4
	SG-211	D-1 SYNC Generator Board:DVS-6000C ONLY	4-6
M	MAT-4	Matte Generator Board	4-32
	MB-482	Mother Board	4-42
	MIX-8	Mixer Board	4-24
	MT-90(BKDS-6072)	BKGD Color Mix Generator Board	4-35
W	WKG-10	Wipe Generator Board	4-16
	WP-37(BKDS-6070)	Enhanced Wipe Generator Board	4-18
X	XPT-3(BKDS-8022)	Digital Input Board	4-36

CPU-147;CPU Board

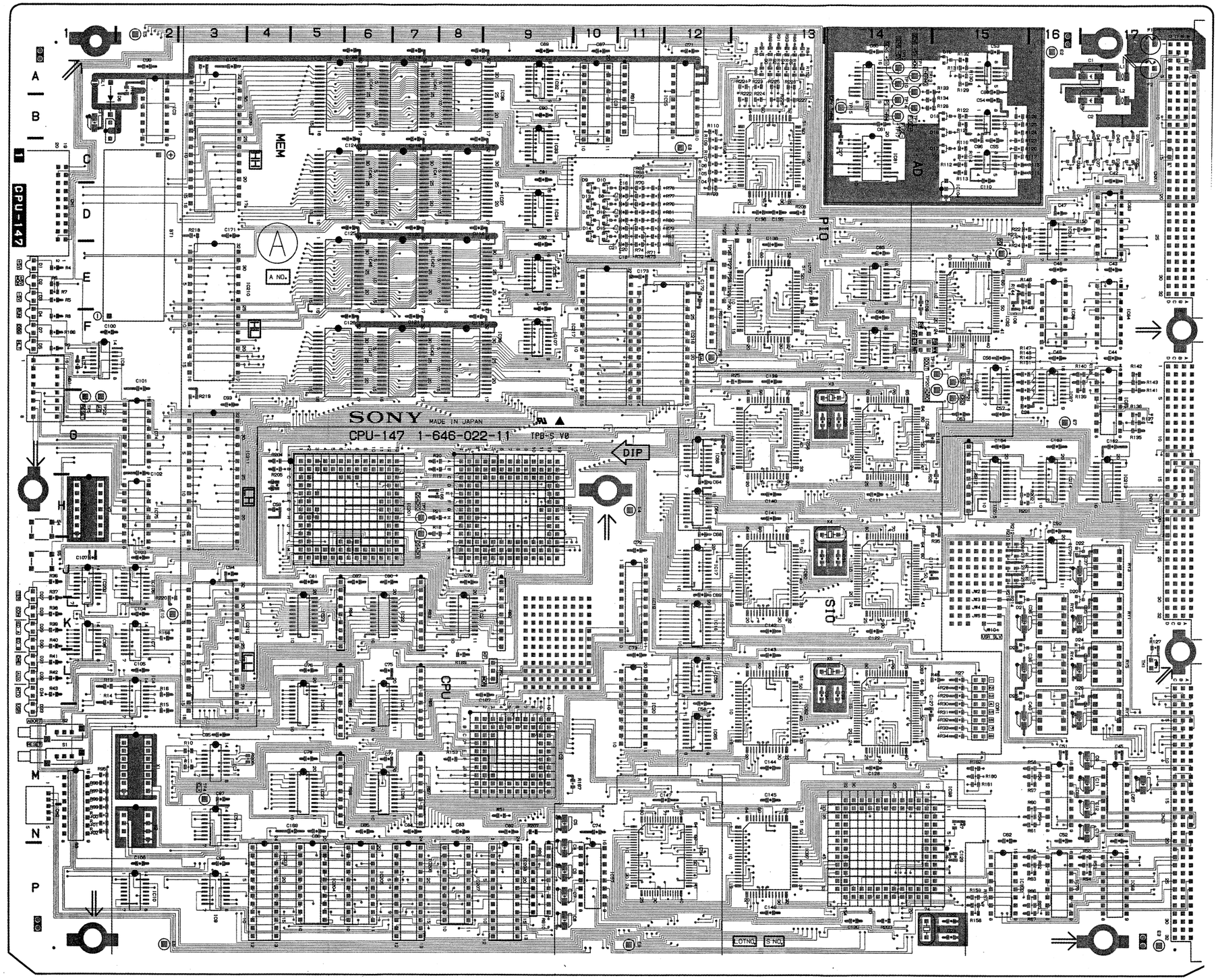

CPU-147(1-646-022-11)

BT1	D-2	E2	A-16	IC80	B-14	TP9	F-12
		E3	P-17	IC81	C-14	TP10	A-14
CNI1	H-9	E4	H-11	IC82	F-15	TP11	A-14
CNI2	M-9	E5	A-2	IC83	D-17	TP12	A-14
CNI19	K-11	E6	P-2	IC84	F-17	TP13	A-14
CNI20	M-11	E7	G-16	IC85	G-17	TP14	B-14
CNI31	B-10	E8	C-12	IC86	F-16	TP15	B-14
CNI98	M-15	E9	P-11	IC87	G-16	TP16	B-14
CNI201	H-7	E10	K-2	IC96	K-1	TP17	B-14
CNI203	P-4			IC97	P-13	TP18	F-15
CNI204	P-5	F1	A-17	IC98	M-15	TP19	F-15
CNI205	P-6	F2	A-17	IC102	P-15	TP20	F-14
CNI206	P-7			IC104	D-15	TP21	G-15
CNI207	P-8	IC2	M-9	IC105	F-15	TP22	G-1
CNI208	P-9	IC3	B-2	IC106	J-6	TP23	D-13
CNI209	B-4	IC4	L-2	IC107	F-2	TP24	D-13
CNI210	E-4	IC5	N-3	IC201	H-7	TP25	D-12
CNI211	G-4	IC7	K-2	IC202	J-1	TP26	E-12
CNI212	K-3	IC8	F-2	IC203	P-4	TP27	E-12
CNI216	F-12	IC9	P-3	IC204	P-5	TP28	E-12
CNI217	F-10	IC10	P-2	IC205	P-6	TP29	E-12
		IC11	M-3	IC206	P-7		
CNX1	C-17	IC17	J-12	IC207	P-8	X1	M-2
		IC18	K-12	IC208	P-9	X2	N-2
CNY1	H-17	IC19	K-11	IC209	B-4	X3	F-14
		IC20	M-11	IC210	E-4	X4	H-14
CNZ1	N-17	IC21	K-8	IC211	G-4	X5	L-14
		IC22	K-7	IC212	K-3	X6	P-15
CN1	D-1	IC23	K-5	IC213	H-17		
CN2	N-1	IC24	M-7	IC214	H-16		
		IC25	M-5	IC215	H-15		
COP2	L-9	IC26	M-7	IC216	F-12		
		IC27	M-5	IC217	F-10		
COR1	M-15	IC31	B-10				
COR2	L-9	IC32	A-9	JW2	J-15		
		IC33	C-9	JW3	J-15		
D1	E-1	IC34	D-9	JW4	K-15		
D2	E-1	IC35	E-9	JW5	K-15		
D3	E-1	IC36	B-9	JW10	K-15		
D4	F-1	IC37	D-9				
D5	F-1	IC38	E-9	ND1	F-1		
D6	B-2	IC39	F-9				
D7	F-1	IC40	A-7	Q1	B-2		
D8	D-10	IC41	C-7				
D9	D-10	IC42	E-7	RB1	F-12		
D10	D-10	IC43	F-7	RB2	K-9		
D11	D-10	IC44	A-6	RB3	K-7		
D12	D-10	IC45	C-6	RB4	K-6		
D13	D-10	IC46	E-6	RB5	M-7		
D14	D-10	IC47	F-6	RB6	M-6		
D15	D-10	IC52	F-14	RB7	M-7		
D16	B-15	IC53	D-16	RB8	M-6		
D17	C-15	IC54	P-12	RB9	P-9		
D18	B-15	IC55	B-12	RB10	P-9		
D19	A-15	IC56	L-12	RB11	B-11		
D20	J-16	IC57	P-10	RB12	H-15		
D21	K-15	IC58	G-13				
D22	J-17	IC59	G-14	RY1	K-17		
D23	K-15	IC60	J-13	RY2	K-16		
D24	K-17	IC61	H-14	RY3	J-17		
D25	L-15	IC62	M-13	RY4	L-16		
D26	L-17	IC63	L-14	RY5	L-17		
D27	K-1	IC64	H-12	RY6	L-16		
D28	K-1	IC65	M-12	RY7	M-17		
D29	K-1	IC66	G-12				
D30	K-1	IC67	M-17	S1	M-1		
D31	L-1	IC68	P-17	S2	M-1		
D32	L-1	IC69	M-16	S3	N-1		
D33	M-1	IC70	P-16	S4	H-1		
D34	L-1	IC71	E-14	S5	J-1		
D35	C-17	IC72	C-13				
D36	C-17	IC73	E-13	TH1	L-1		
D37	C-17	IC74	G-2				
D38	C-16	IC75	H-2	TP4	M-3		
D39	C-17	IC76	J-16	TP5	G-1		
D40	C-17	IC77	C-15	TP6	J-7		
D41	C-17	IC78	B-15	TP7	H-7		
D42	C-16	IC79	A-15	TP8	E-15		

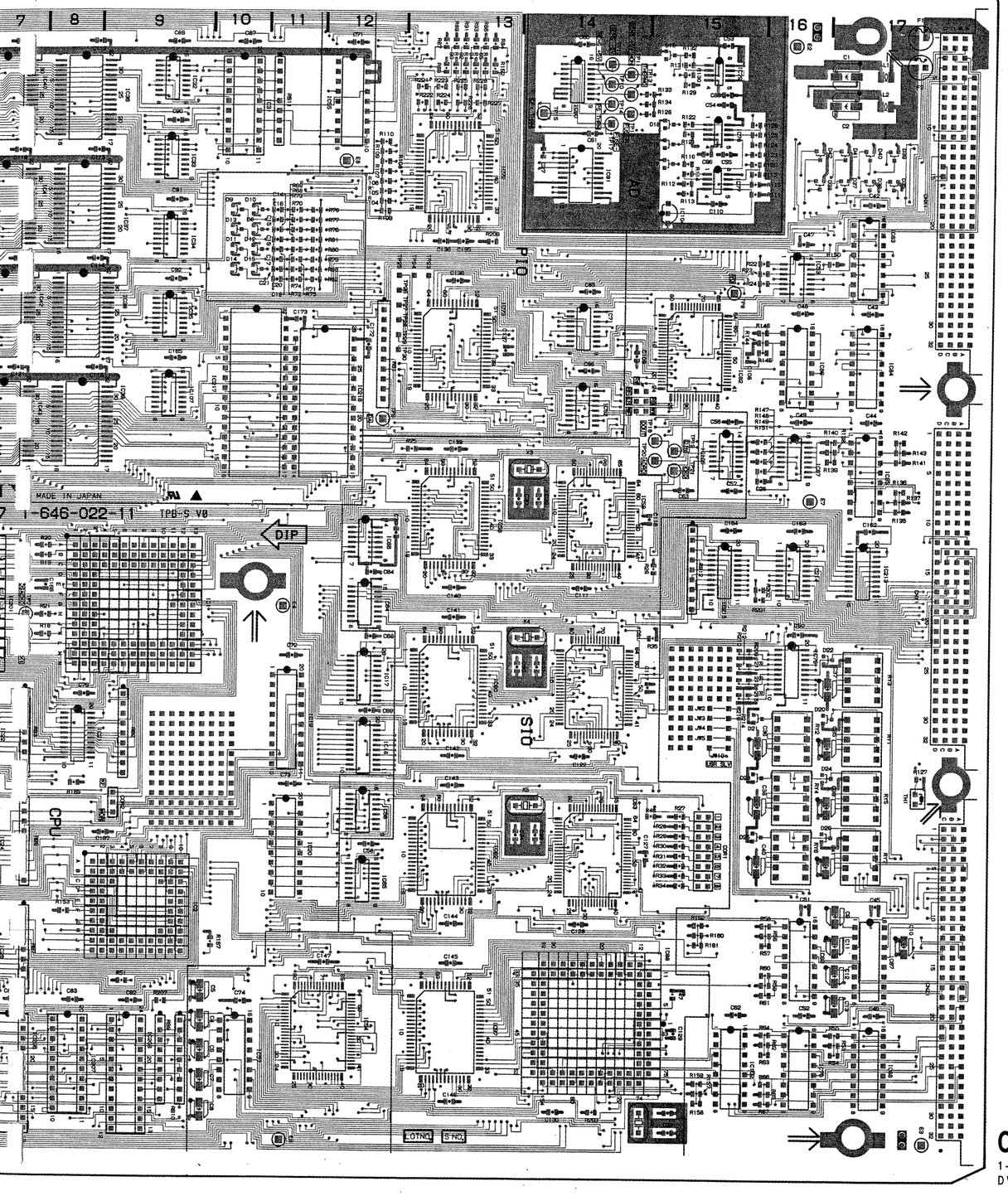

CPU-147 -A SIDE-

1-646-022-11

DVS-6000/6000C

CPU-147;CPU Board

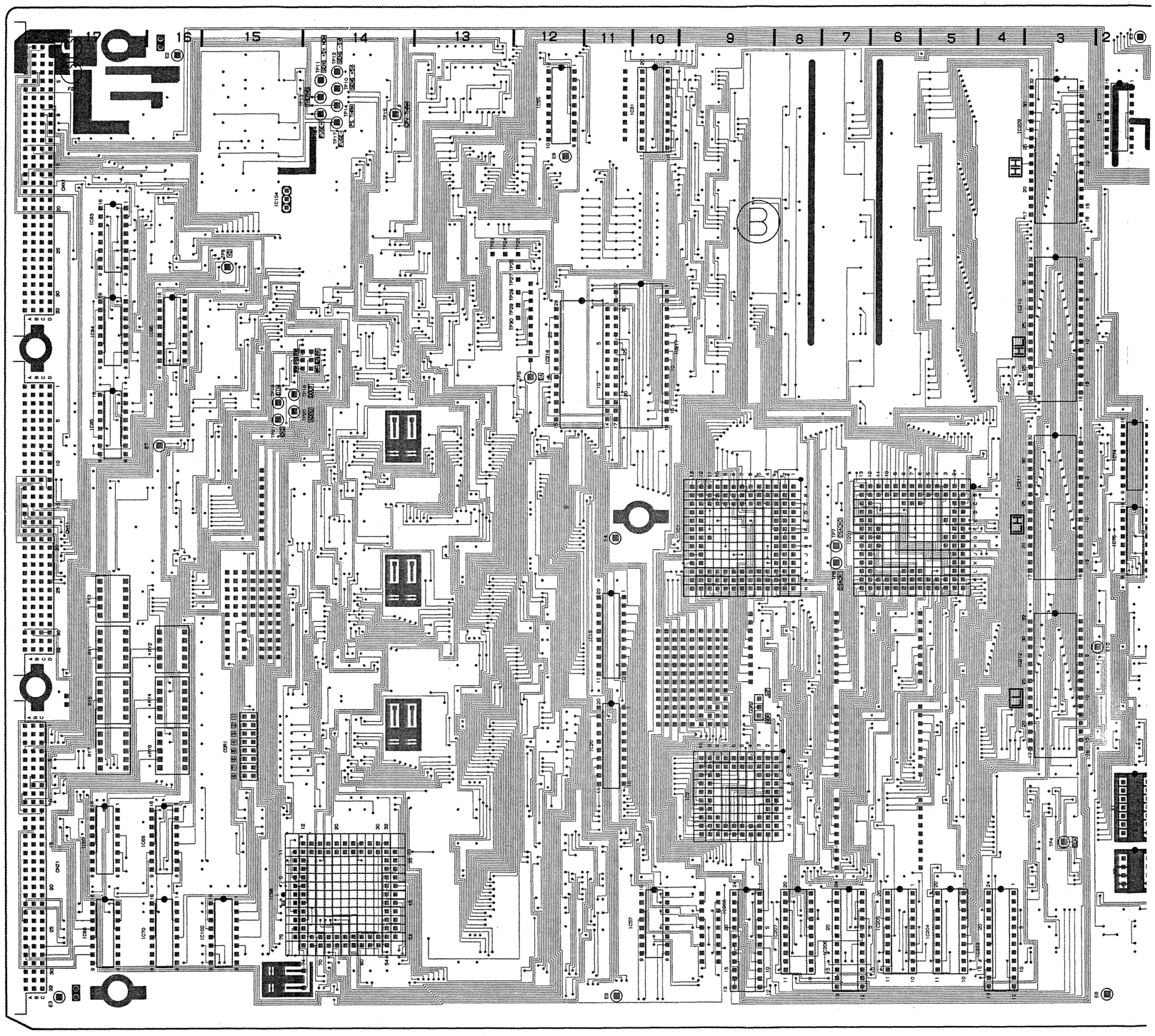

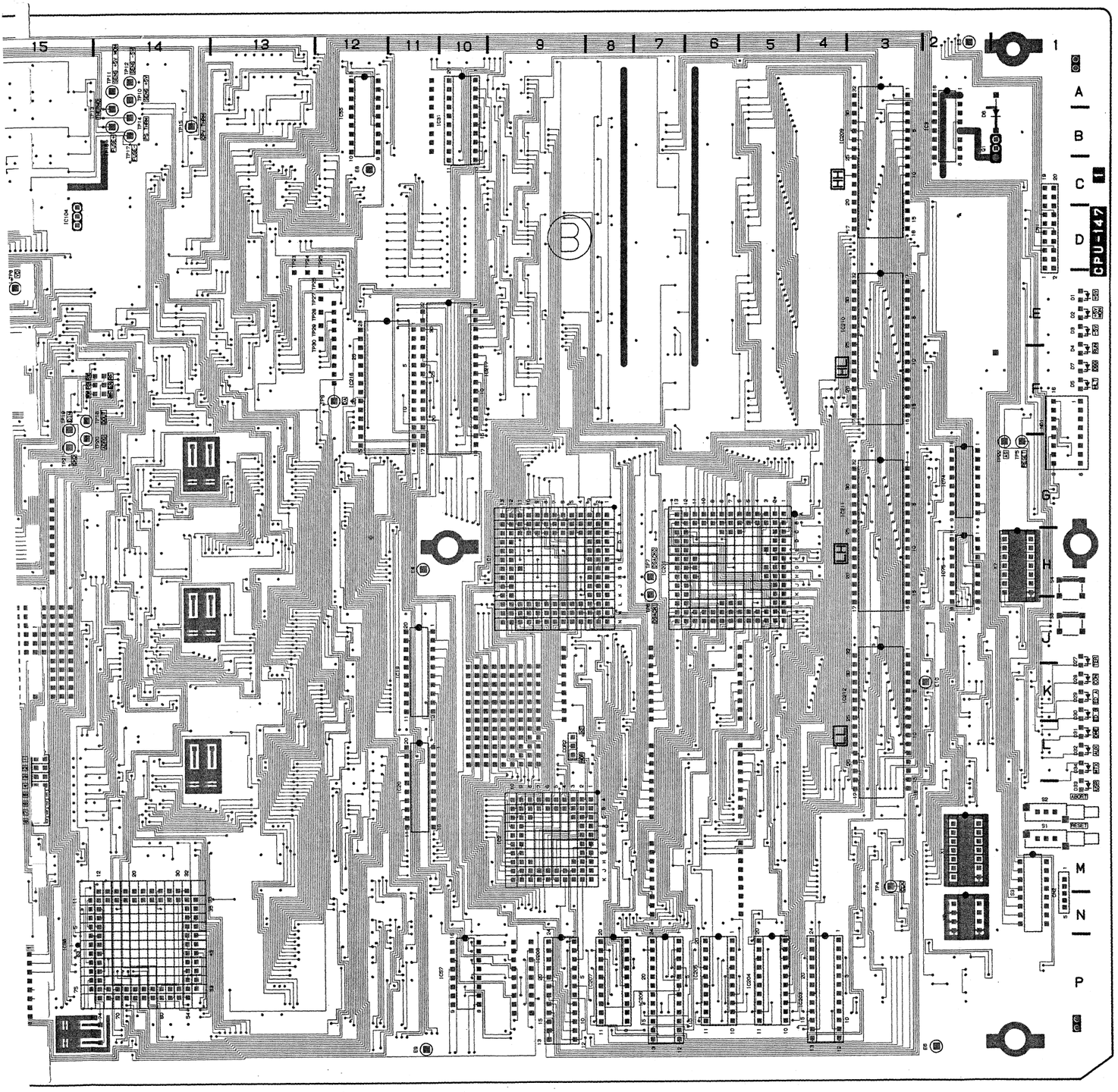

CPU-147 -B SIDE-
1-646-022-11
DVS-6000/6000C

CPU-147(1-646-022-11)

BT1	D-2	E2	A-16	IC81	C-14	TP10	A-14
		E3	P-17	IC82	F-15	TP11	A-14
CNI1	H-9	E4	H-11	IC83	D-17	TP12	A-14
CNI2	M-9	E5	A-2	IC84	F-17	TP13	A-14
CNI19	K-11	E6	P-2	IC85	G-17	TP14	B-14
CNI20	M-11	E7	G-16	IC86	F-16	TP15	B-14
CNI31	B-10	E8	C-12	IC87	G-16	TP16	B-14
CNI98	M-15	E9	P-11	IC96	K-1	TP17	B-14
CNI201	H-7	E10	K-2	IC97	P-13	TP18	F-15
CNI203	P-4			IC98	M-15	TP19	F-15
CNI204	P-5	F1	A-17	IC102	P-15	TP20	F-14
CNI205	P-6	F2	A-17	IC104	D-15	TP21	G-15
CNI206	P-7	IC2	M-9	IC105	F-15	TP22	G-1
CNI207	P-8	IC3	B-2	IC106	J-6	TP23	D-13
CNI208	P-9	IC4	L-2	IC107	F-2	TP24	D-13
CNI209	B-4	IC5	N-3	IC201	H-7	TP25	D-12
CNI210	E-4	IC7	K-2	IC202	J-1	TP26	E-12
CNI211	G-4	IC8	F-2	IC203	P-4	TP27	E-12
CNI212	K-3	IC9	P-3	IC204	P-5	TP28	E-12
CNI216	F-12	IC10	P-2	IC205	P-6	TP29	E-12
CNI217	F-10	IC11	M-3	IC206	P-7		
		IC17	J-12	IC207	P-8	X1	M-2
CNX1	C-17	IC18	K-12	IC208	P-9	X2	N-2
		IC19	K-11	IC209	B-4	X3	F-14
CNY1	H-17	IC20	M-11	IC210	E-4	X4	H-14
		IC21	K-8	IC211	G-4	X5	L-14
CNZ1	N-17	IC22	K-7	IC212	K-3	X6	P-15
		IC23	K-5	IC213	H-17		
CN1	D-1	IC24	M-7	IC214	H-16		
CN2	N-1	IC25	M-5	IC215	H-15		
		IC26	M-7	IC216	F-12		
COP2	L-9	IC27	M-5	IC217	F-10		
		IC31	B-10				
COR1	M-15	IC32	A-9	JW2	J-15		
COR2	L-9	IC33	C-9	JW3	J-15		
		IC34	D-9	JW4	K-15		
D1	E-1	IC35	E-9	JW5	K-15		
D2	E-1	IC36	B-9	JW10	K-15		
D3	E-1	IC37	D-9				
D4	F-1	IC38	E-9	ND1	F-1		
D5	F-1	IC39	F-9				
D6	B-2	IC40	A-7	Q1	B-2		
D7	F-1	IC41	C-7				
D8	D-10	IC42	E-7	RB1	F-12		
D9	D-10	IC43	F-7	RB2	K-9		
D10	D-10	IC44	A-6	RB3	K-7		
D11	D-10	IC45	C-6	RB4	K-6		
D12	D-10	IC46	E-6	RB5	M-7		
D13	D-10	IC47	F-6	RB6	M-6		
D14	D-10	IC52	F-14	RB7	M-7		
D15	D-10	IC53	D-16	RB8	M-6		
D16	B-15	IC54	P-12	RB9	P-9		
D17	C-15	IC55	B-12	RB10	P-9		
D18	B-15	IC56	L-12	RB11	B-11		
D19	A-15	IC57	P-10	RB12	H-15		
D20	J-16	IC58	G-13				
D21	K-15	IC59	G-14	RY1	K-17		
D22	J-17	IC60	J-13	RY2	K-16		
D23	K-15	IC61	H-14	RY3	J-17		
D24	K-17	IC62	M-13	RY4	L-16		
D25	L-15	IC63	L-14	RY5	L-17		
D26	L-17	IC64	H-12	RY6	L-16		
D27	K-1	IC65	M-12	RY7	M-17		
D28	K-1	IC66	G-12				
D29	K-1	IC67	M-17	S1	M-1		
D30	K-1	IC68	P-17	S2	M-1		
D31	L-1	IC69	M-16	S3	N-1		
D32	L-1	IC70	P-16	S4	H-1		
D33	M-1	IC71	E-14	S5	J-1		
D34	L-1	IC72	C-13				
D35	C-17	IC73	E-13	TH1	L-1		
D36	C-17	IC74	G-2				
D37	C-17	IC75	H-2	TP4	M-3		
D38	C-16	IC76	J-16	TP5	G-1		
D39	C-17	IC77	C-15	TP6	J-7		
D40	C-17	IC78	B-15	TP7	H-7		
D41	C-17	IC79	A-15	TP8	E-15		
D42	C-16	IC80	B-14	TP9	F-12		

(DVS-6000 ONLY)
SG-210;D-2 SYNC Generator Board

SG-210(1-646-023-11)

CNO1	F-4	Q200	E-5
CNO2	B-4	Q201	E-5
CNX1	G-2	TH1	F-4
CNX2	A-2	TP301	B-2
CNY1	F-3	TP302	C-2
CNY2	A-4	VCO1	E-2
CNZ1	G-5		
D1	F-1		
D2	F-1		
D200	E-5		
D201	B-2		
E100	D-1		
E200	D-5		
E300	C-2		
E400	E-2		
F1	F-1		
F2	F-1		

IC100	E-1
IC101	F-1
IC102	F-4
IC103	C-1
IC104	C-1
IC105	D-1
IC106	D-1
IC107	B-1
IC108	D-1
IC109	B-1
IC110	B-1
IC111	C-1
IC112	B-1
IC113	C-1
IC200	D-5
IC201	B-2
IC202	B-2
IC203	B-2
IC204	B-2
IC205	B-2
IC206	C-2
IC300	C-2
IC301	C-2
IC302	C-2
IC303	C-2
IC304	D-2
IC305	D-2
IC306	E-2
IC308	F-2
IC309	E-2
IC400	B-3
IC401	C-3
IC402	C-3
IC403	D-3
IC404	B-3
IC405	C-3
IC406	D-3
IC407	E-3
IC408	E-3
IC410	E-3
IC411	E-3
IC412	F-3
IC413	F-3
IC414	D-3
IC700	F-3
IC701	F-4
IC702	A-3
IC703	A-3

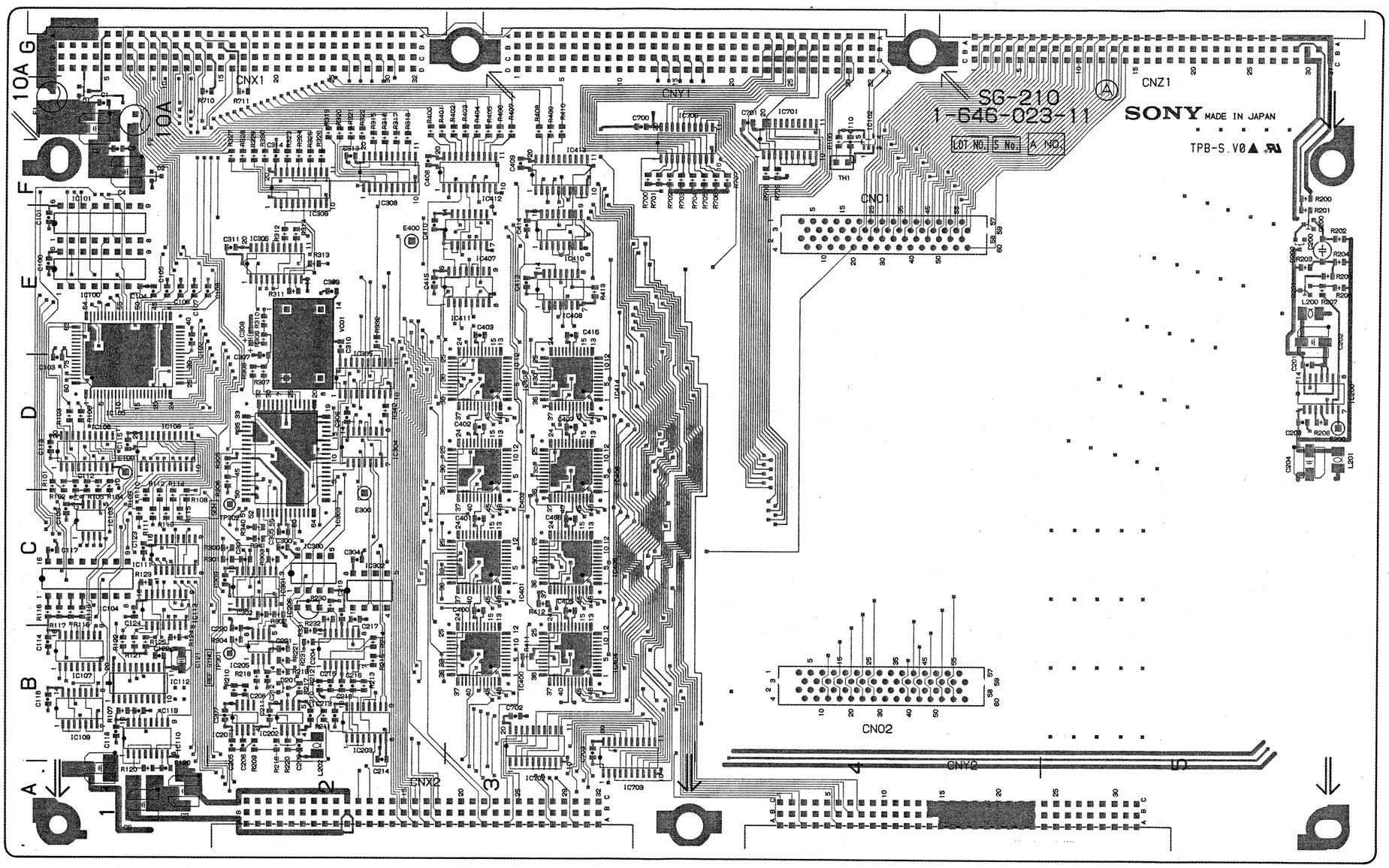

SG-210 -A SIDE-
1-646-023-11
DVS-6000

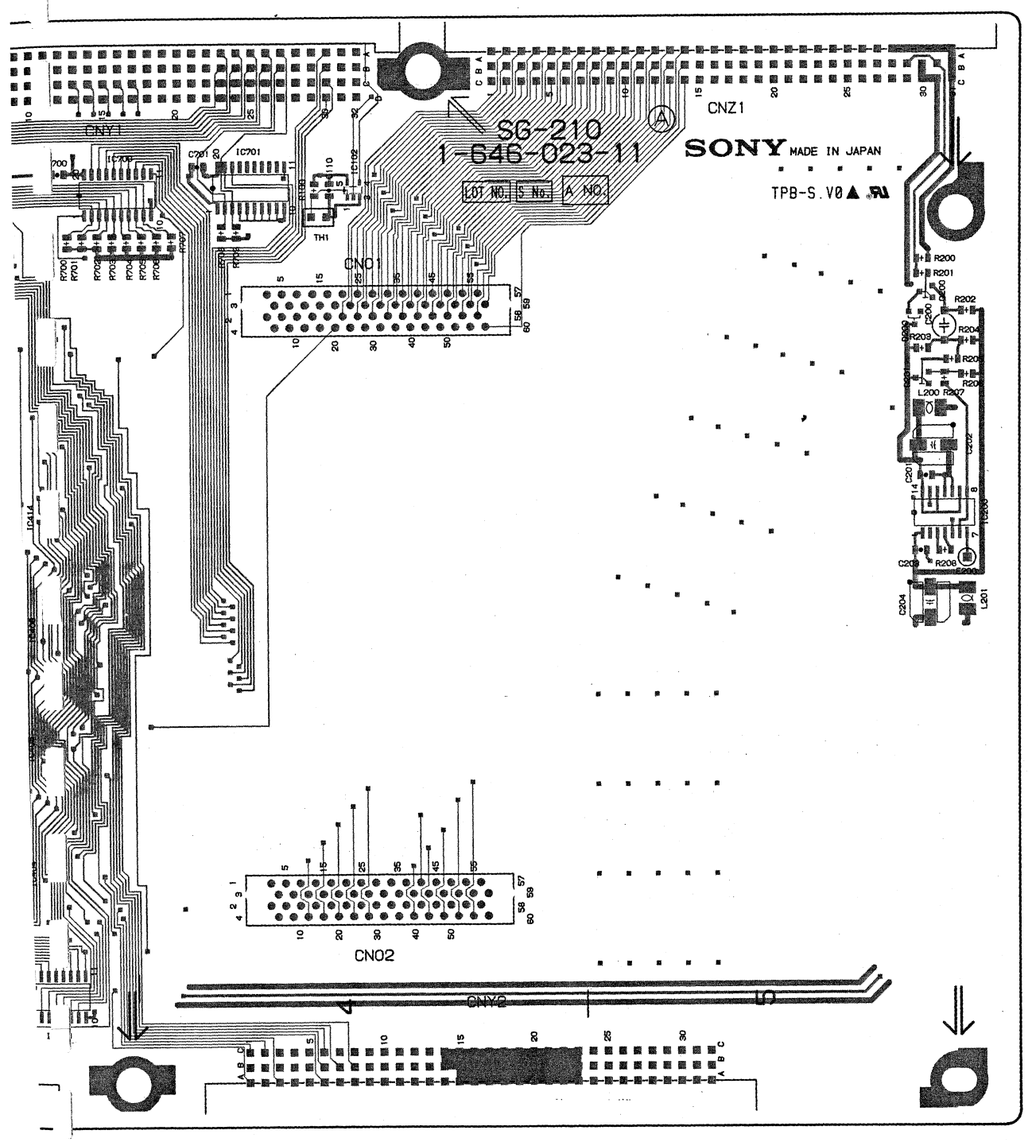

SG-210 -A SIDE-
1-646-023-11
DVS-6000

(DVS-6000 ONLY)
SG-210;D-2 SYNC Generator Board

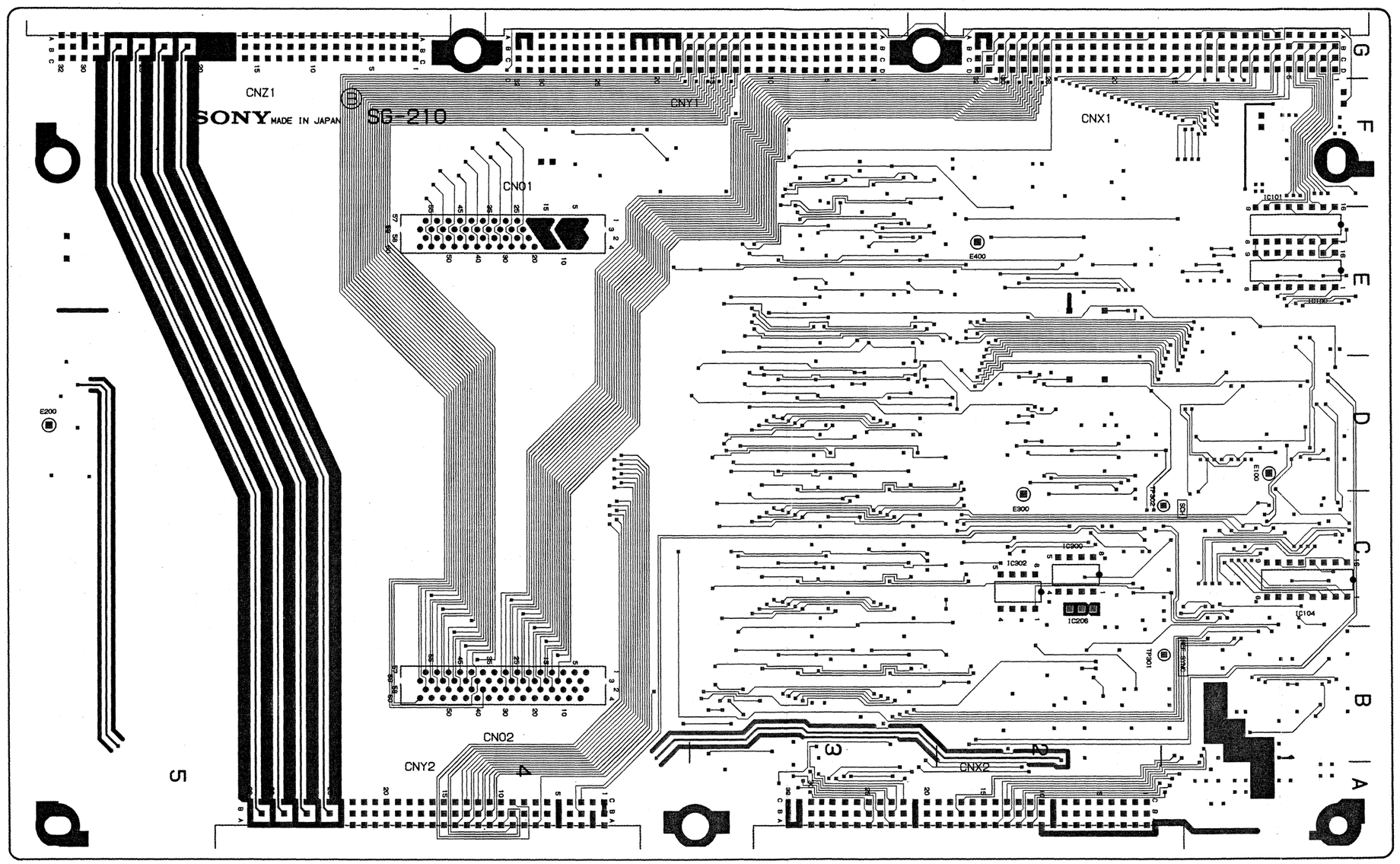

SG-210 -B SIDE-
1-646-023-11
DVS-6000

SG-210(1-646-023-11)

CNO1	F-4	Q200	E-5
CNO2	B-4	Q201	E-5
CNX1	G-2	TH1	F-4
CNX2	A-2	TP301	B-2
CNY1	F-3	TP302	C-2
CNY2	A-4	VCO1	E-2
CNZ1	G-5		
D1	F-1		
D2	F-1		
D200	E-5		
D201	B-2		
E100	D-1		
E200	D-5		
E300	C-2		
E400	E-2		
F1	F-1		
F2	F-1		
IC100	E-1		
IC101	F-1		
IC102	F-4		
IC103	C-1		
IC104	C-1		
IC105	D-1		
IC106	D-1		
IC107	B-1		
IC108	D-1		
IC109	B-1		
IC110	B-1		
IC111	C-1		
IC112	B-1		
IC113	C-1		
IC200	D-5		
IC201	B-2		
IC202	B-2		
IC203	B-2		
IC204	B-2		
IC205	B-2		
IC206	C-2		
IC300	C-2		
IC301	C-2		
IC302	C-2		
IC303	C-2		
IC304	D-2		
IC305	D-2		
IC306	E-2		
IC308	F-2		
IC309	E-2		
IC400	B-3		
IC401	C-3		
IC402	C-3		
IC403	D-3		
IC404	B-3		
IC405	C-3		
IC406	D-3		
IC407	E-3		
IC408	E-3		
IC410	E-3		
IC411	E-3		
IC412	F-3		
IC413	F-3		
IC414	D-3		
IC700	F-3		
IC701	F-4		
IC702	A-3		
IC703	A-3		

4-5

(DVS-6000C ONLY)
SG-211;D-1 SYNC Generator Board

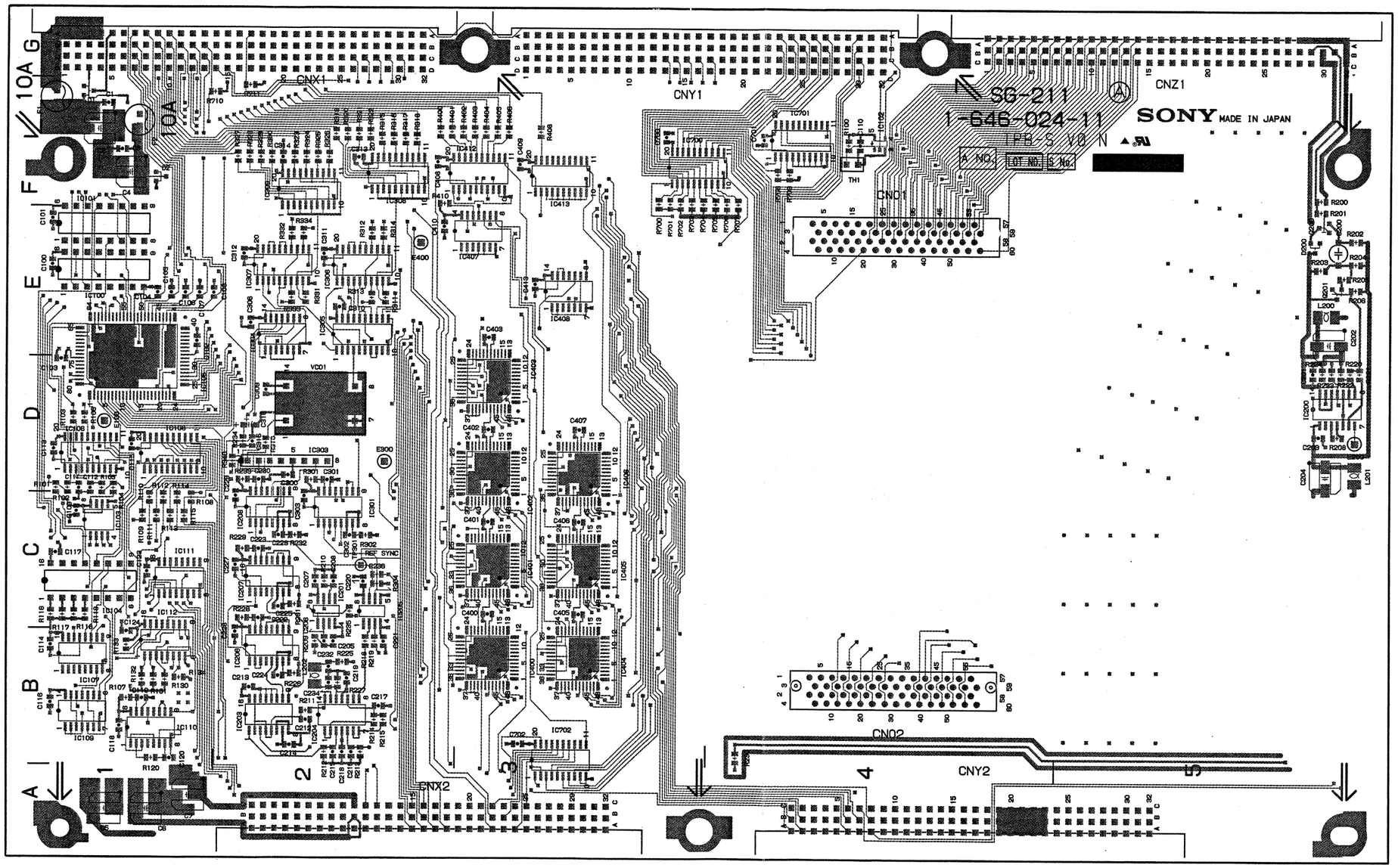

SG-211 -A SIDE-
1-646-024-11
DVS-6000C

4-6

(DVS-6000C ONLY)
SG-211;D-1 SYNC Generator Board

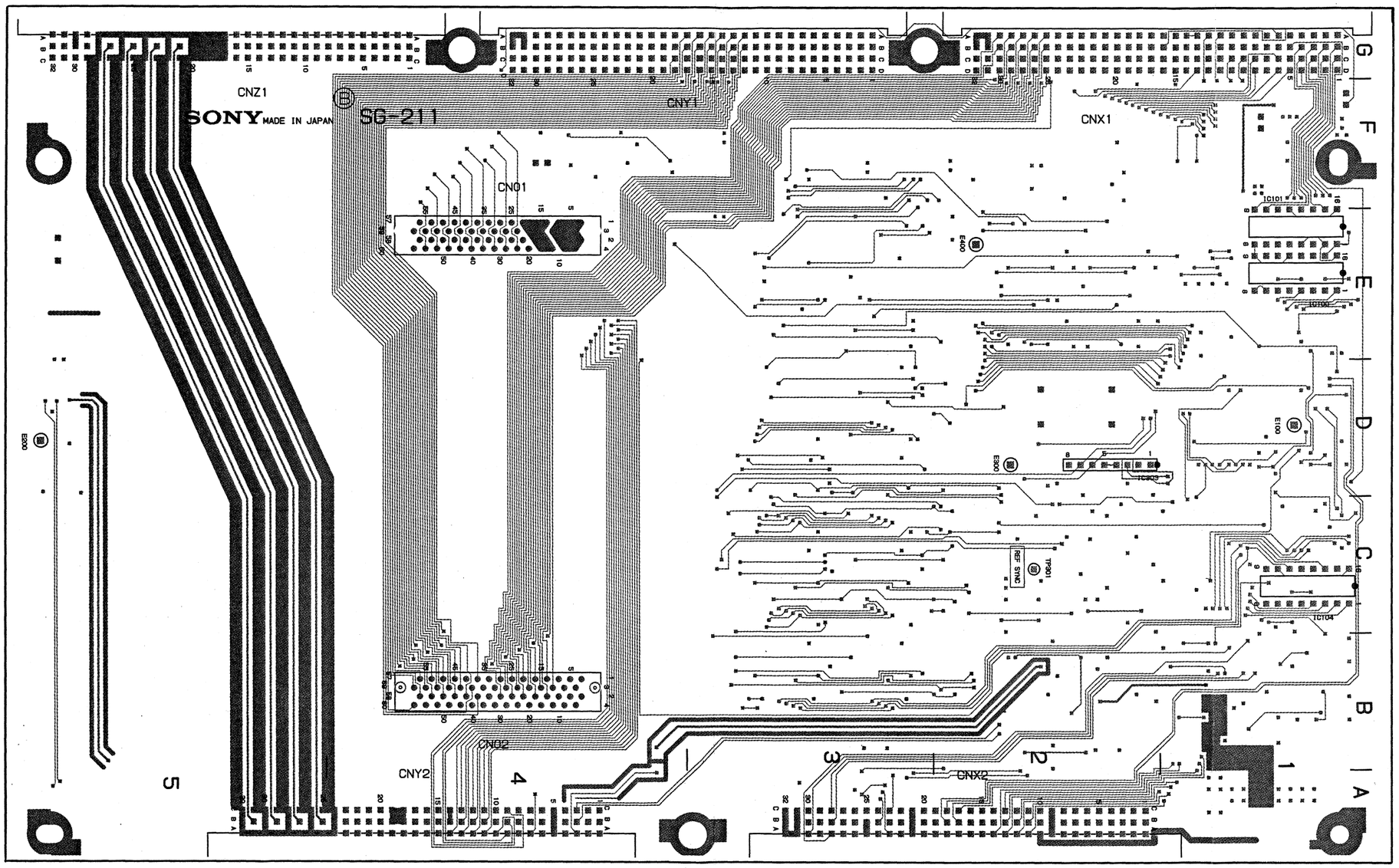

SG-211 -B SIDE-
1-646-024-11
DVS-6000C

4-7

LE-118;LED Board

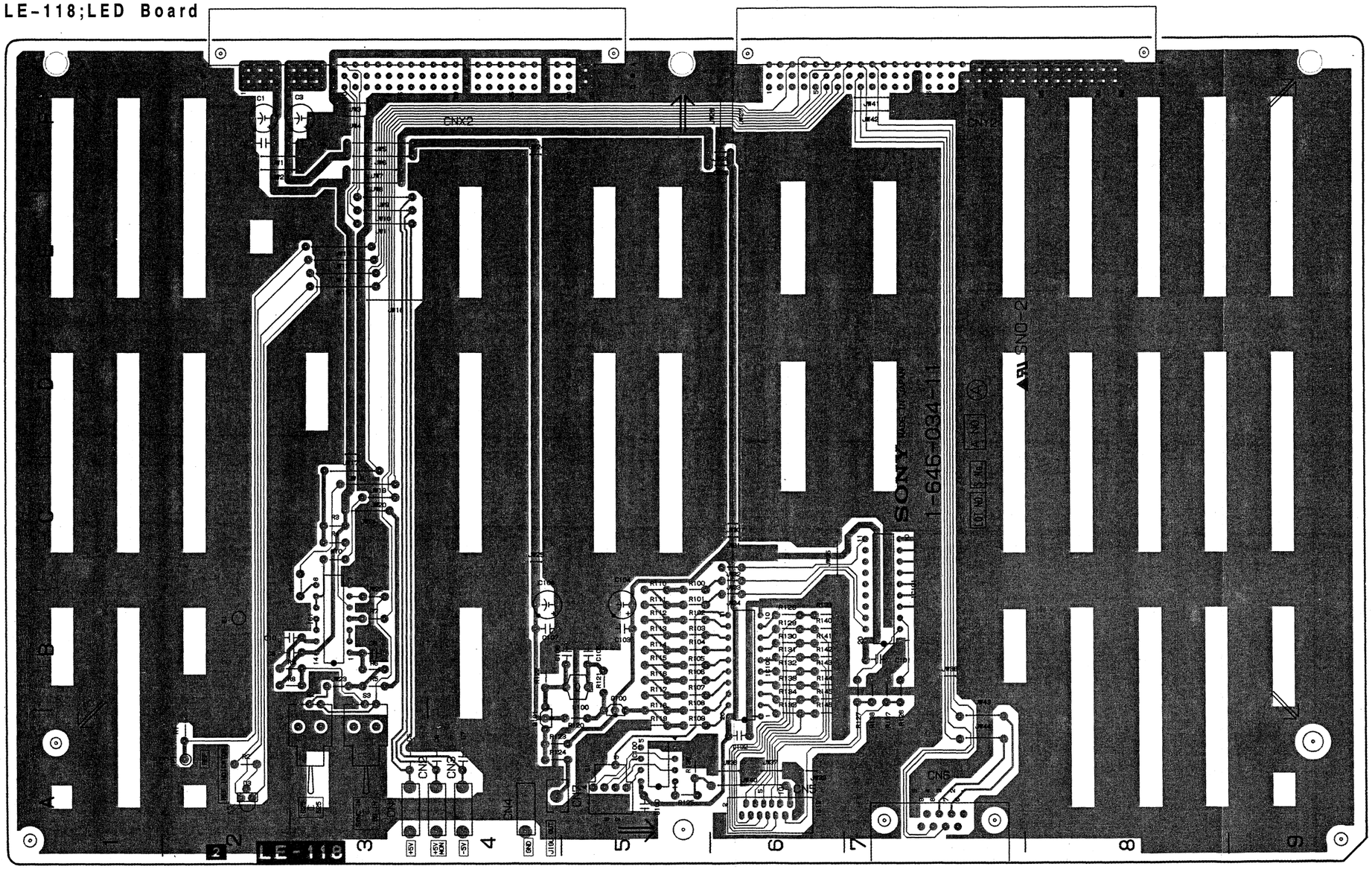

LE-118 -A SIDE-

1-646-034-11

DVS-6000/6000C

LE-118(1-646-034-11)

CNX2	F-4
CNY2	F-7
CN1	A-3
CN2	A-3
CN3	A-4
CN4	A-4
CN5	A-6
CN6	A-7
CN7	A-5
D3	A-2
E1	B-2
IC100	A-5
IC101	B-7
IC102	B-6
JW1	F-2
JW2	F-2
JW3	F-3
JW4	F-3
JW5	F-3
JW6	F-3
JW7	F-3
JW8	F-3
JW9	E-3
JW10	E-3
JW11	E-3
JW12	E-3
JW13	E-3
JW14	E-3
JW15	E-3
JW16	E-3
JW17	C-3
JW18	C-3
JW19	C-3
JW20	C-3
JW21	C-3
JW22	C-3
JW23	B-3
JW24	F-4
JW25	C-4
JW26	F-6
JW27	F-6
JW28	F-6
JW29	F-6
JW30	C-6
JW31	C-6
JW32	C-6
JW33	C-6
JW34	B-6
JW35	C-6
JW36	A-6
JW37	A-6
JW38	B-7
JW39	A-6
JW40	A-6
JW41	F-7
JW42	F-7
JW43	B-7
JW44	A-7
Q100	B-5
Q101	A-4
S1	A-5
TP1	A-2

4-9

SD-30;Digital Edit PVW/REF Output Board

SD-30(1-646-035-11)

CNX2	F-3	Q100	B-5
		Q101	B-5
CNY2	F-7	Q200	E-9
		Q201	E-9
CN1	A-3	Q204	E-8
CN2	A-4	Q205	D-9
CN3	A-4	Q206	D-9
CN4	A-4	Q207	E-9
CN5	A-6	Q208	E-9
CN6	A-7	Q400	E-7
CN7	A-5	Q401	E-8
		Q402	E-7
CV400	F-7		
		S1	A-5
D3	A-2	S2	A-2
D200	E-9	S3	A-3
D400	F-6	S400	C-5
D402	E-7		
		TP1	A-2
E400	F-5	TP200	E-9
E401	D-7	TP400	F-5
E402	B-6		
		VCO400	D-5
FL400	D-7	VCO401	C-5
		VCO402	D-5
IC1	B-2		
IC2	E-2	X300	D-3
IC100	A-5		
IC101	B-6		
IC102	A-6		
IC200	E-6		
IC201	E-6		
IC202	B-7		
IC203	B-8		
IC204	B-8		
IC205	C-8		
IC206	C-8		
IC207	C-8		
IC208	C-9		
IC209	D-8		
IC210	F-8		
IC211	C-9		
IC212	B-9		
IC213	C-9		
IC300	F-3		
IC301	E-4		
IC302	E-3		
IC303	B-3		
IC304	E-2		
IC305	C-3		
IC306	D-3		
IC307	D-4		
IC308	D-3		
IC309	D-3		
IC310	D-3		
IC400	F-5		
IC401	E-6		
IC402	E-5		
IC403	E-5		
IC404	E-4		
IC405	D-6		
IC409	C-6		
IC410	C-7		
IC412	F-7		
IC413	F-8		
IC414	B-4		
IC416	D-4		
IC417	C-5		
IC418	B-6		
IC419	C-6		

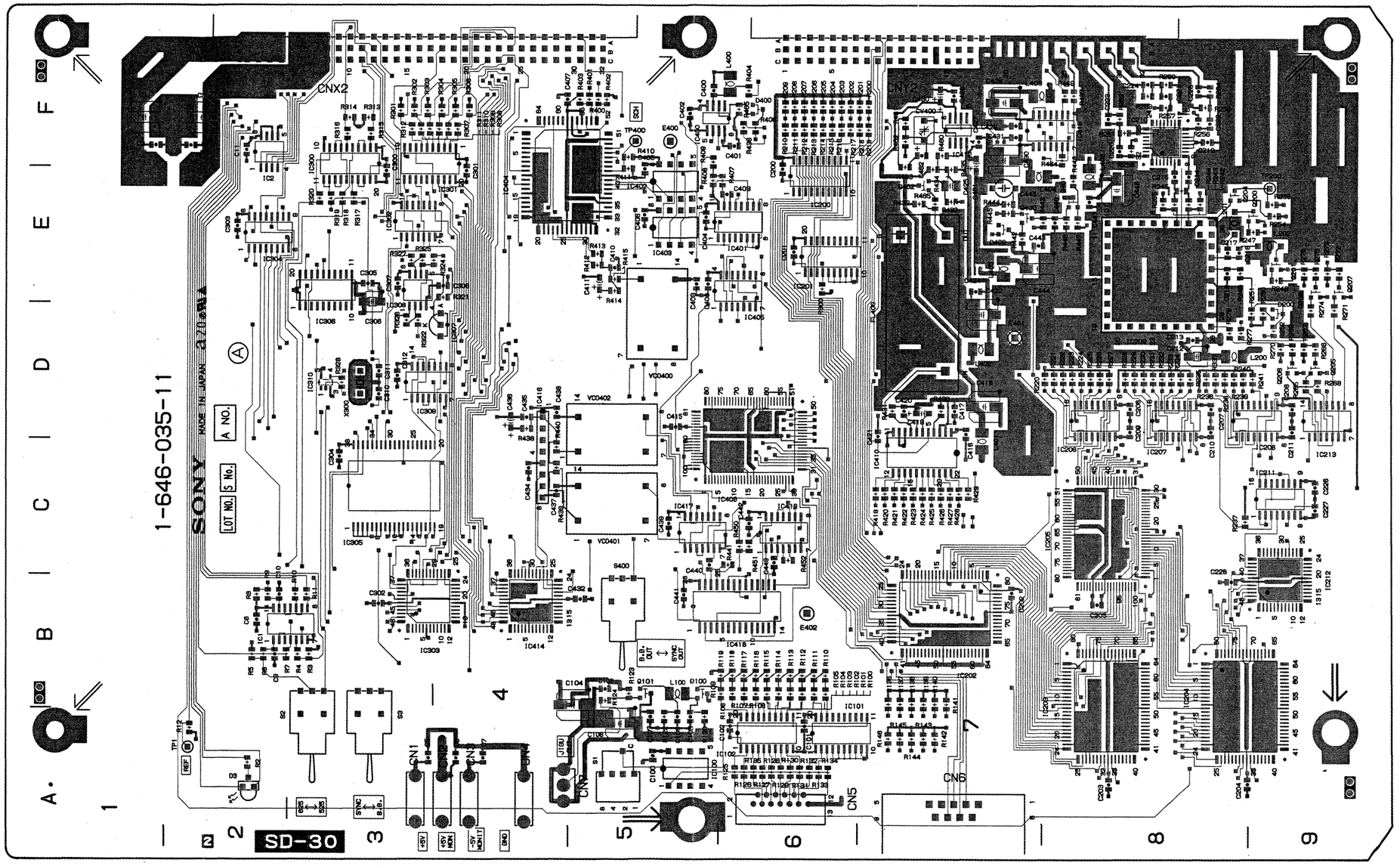

SD-30 -A SIDE-
1-646-035-11
BKDS-6060

4-10

SD-30;Digital Edit PVW/REF Output Board

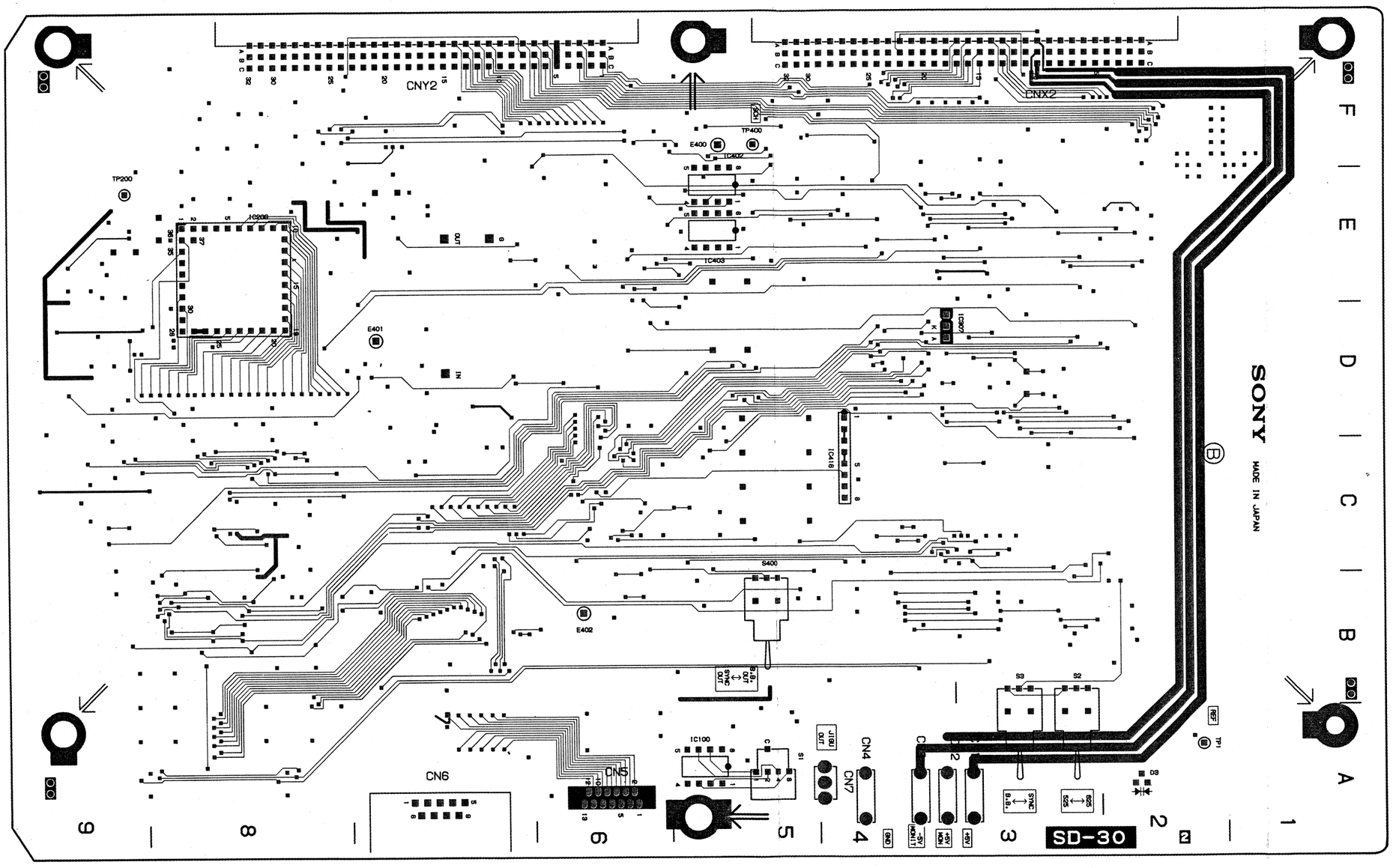

SD-30(1-646-035-11)

CNX2	F-3	Q100	B-5
		Q101	B-5
CNY2	F-7	Q200	E-9
		Q201	E-9
CN1	A-3	Q204	E-8
CN2	A-4	Q205	D-9
CN3	A-4	Q206	D-9
CN4	A-4	Q207	E-9
CN5	A-6	Q208	E-9
CN6	A-7	Q400	E-7
CN7	A-5	Q401	E-8
		Q402	E-7
CV400	F-7		
		S1	A-5
D3	A-2	S2	A-2
D200	E-9	S3	A-3
D400	F-6	S400	C-5
D402	E-7		
		TP1	A-2
E400	F-5	TP200	E-9
E401	D-7	TP400	F-5
E402	B-6		
		VCO400	D-5
FL400	D-7	VCO401	C-5
		VCO402	D-5
IC1	B-2		
IC2	E-2	X300	D-3
IC100	A-5		
IC101	B-6		
IC102	A-6		
IC200	E-6		
IC201	E-6		
IC202	B-7		
IC203	B-8		
IC204	B-8		
IC205	C-8		
IC206	C-8		
IC207	C-8		
IC208	C-9		
IC209	D-8		
IC210	F-8		
IC211	C-9		
IC212	B-9		
IC213	C-9		
IC300	F-3		
IC301	E-4		
IC302	E-3		
IC303	B-3		
IC304	E-2		
IC305	C-3		
IC306	D-3		
IC307	D-4		
IC308	D-3		
IC309	D-3		
IC310	D-3		
IC400	F-5		
IC401	E-6		
IC402	E-5		
IC403	E-5		
IC404	E-4		
IC405	D-6		
IC409	C-6		
IC410	C-7		
IC412	F-7		
IC413	F-8		
IC414	B-4		
IC416	D-4		
IC417	C-5		
IC418	B-6		
IC419	C-6		

SD-30 -B SIDE-
1-646-035-11
BKDS-6060

4-11

(DVS-6000 ONLY)
DA-71;Analog Edit PVW/REF Output Board

DA-71(1-646-036-11)

CNX2	F-4
CNY2	F-8
CN1	A-3
CN2	A-4
CN3	A-4
CN4	A-4
CN5	A-6
CN6	A-7
CN7	A-5
CV200	E-8
CV400	F-7
D3	A-2
E200	C-9
E201	D-8
E400	D-7
FL200	D-8
FL400	E-7
IC2	F-3
IC100	A-5
IC101	B-6
IC102	A-6
IC200	E-6
IC201	E-6
IC202	B-7
IC203	A-8
IC204	A-8
IC205	B-8
IC206	C-8
IC207	B-7
IC209	F-8
IC211	D-8
IC212	E-8
IC213	B-6
IC214	F-8
IC215	F-6
IC216	F-4
IC217	C-8
IC218	C-9
IC300	F-5
IC301	E-5
IC302	D-5
IC303	D-5
IC400	C-6
IC401	C-7
IC402	D-7
IC406	F-7
Q100	B-5
Q101	B-5
Q400	E-8
S1	A-5
TP1	A-2

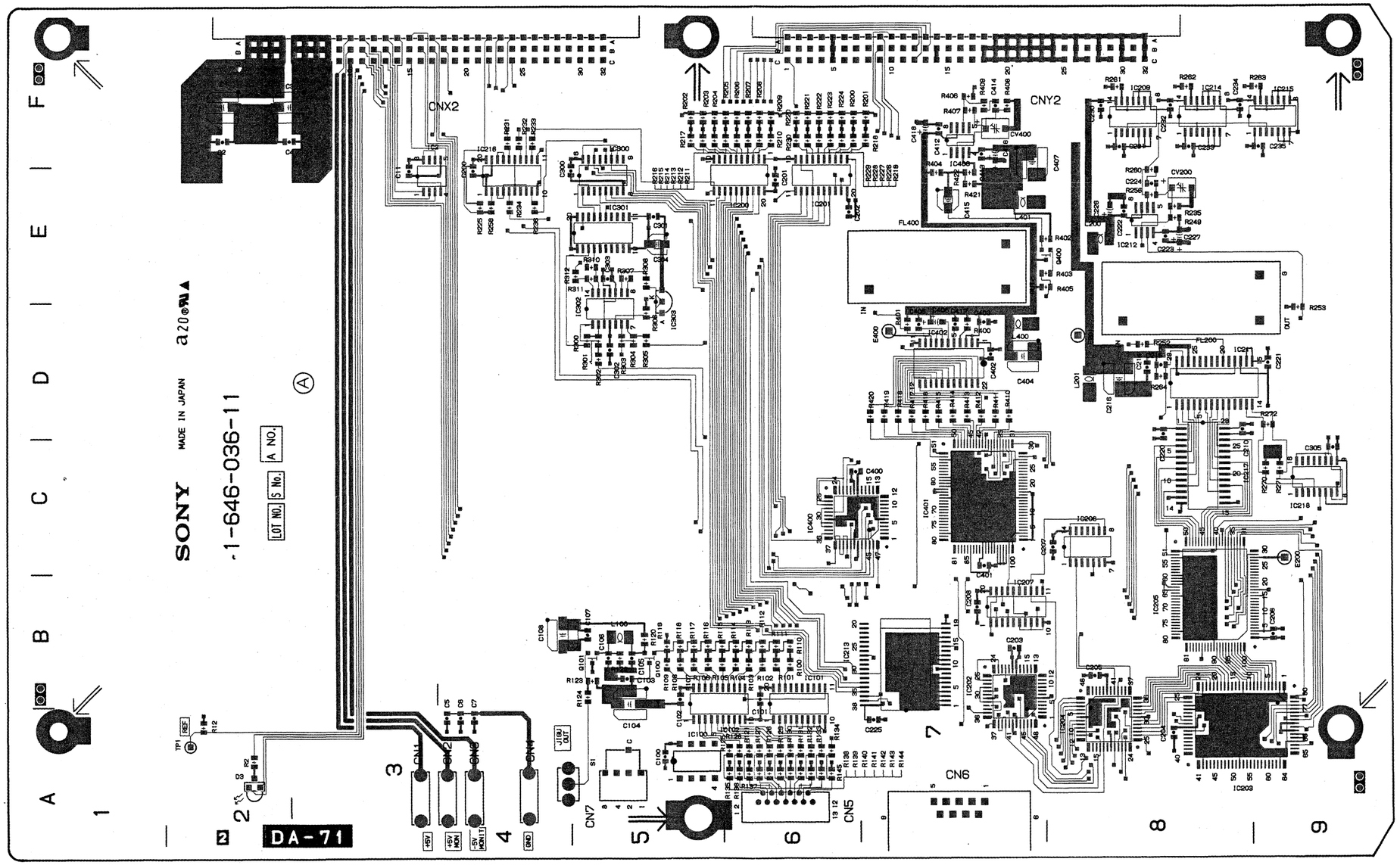

DA-71 -A SIDE-
1-646-036-11
BKDS-6061

4-12

(DVS-6000 ONLY)
DA-71;Analog Edit PVW/REF Output Board

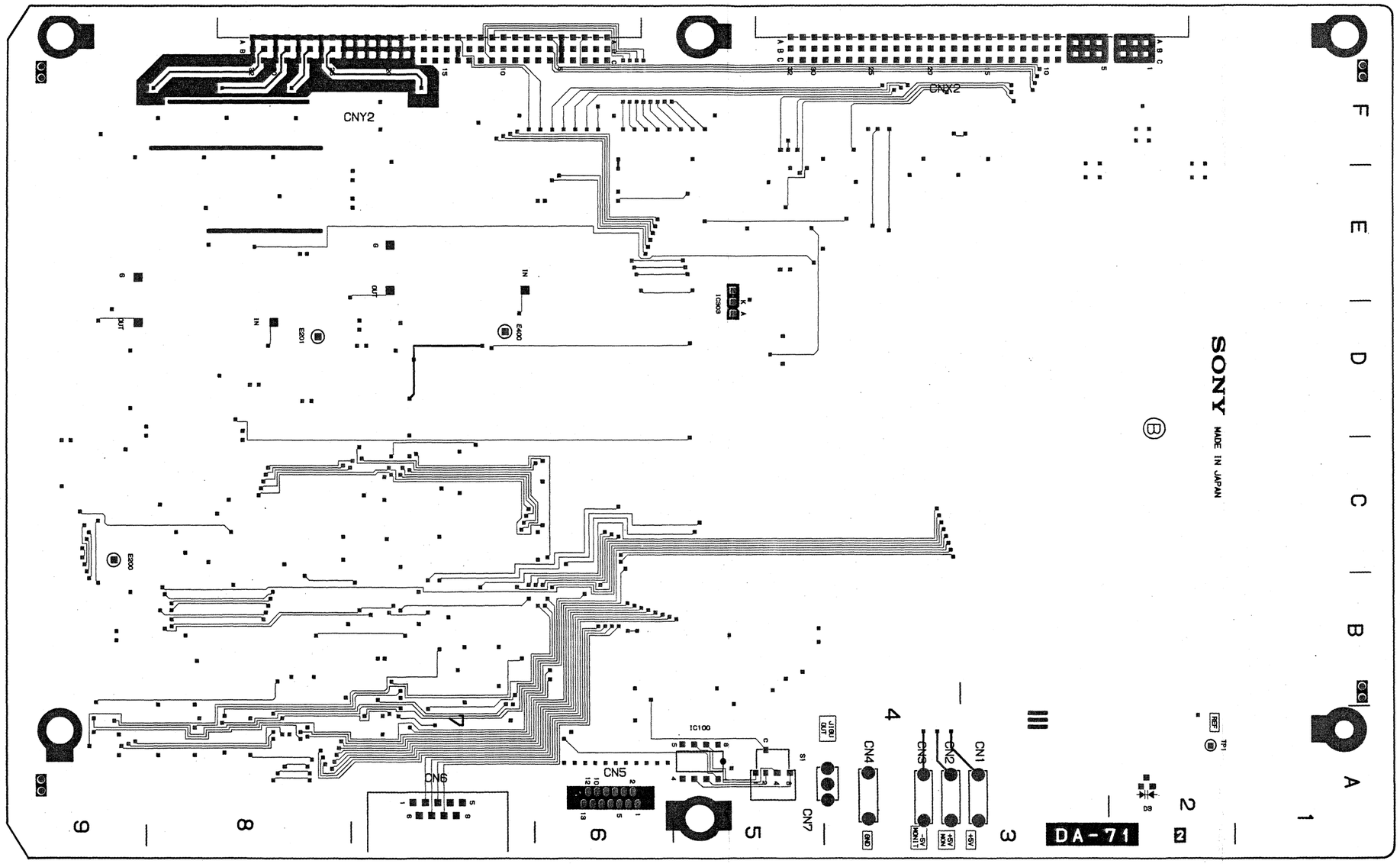

DA-71(1-646-036-11)

CNX2	F-4
CNY2	F-8
CN1	A-3
CN2	A-4
CN3	A-4
CN4	A-4
CN5	A-6
CN6	A-7
CN7	A-5
CV200	E-8
CV400	F-7
D3	A-2
E200	C-9
E201	D-8
E400	D-7
FL200	D-8
FL400	E-7
IC2	F-3
IC100	A-5
IC101	B-6
IC102	A-6
IC200	E-6
IC201	E-6
IC202	B-7
IC203	A-8
IC204	A-8
IC205	B-8
IC206	C-8
IC207	B-7
IC209	F-8
IC211	D-8
IC212	E-8
IC213	B-6
IC214	F-8
IC215	F-6
IC216	F-4
IC217	C-8
IC218	C-9
IC300	F-5
IC301	E-5
IC302	D-5
IC303	D-5
IC400	C-6
IC401	C-7
IC402	D-7
IC406	F-7
Q100	B-5
Q101	B-5
Q400	E-8
S1	A-5
TP1	A-2

DA-71 -B SIDE-
1-646-036-11
BKDS-6061

4-13

(DVS-6000C ONLY)
DA-72;Analog Edit PVW/REF Output Board

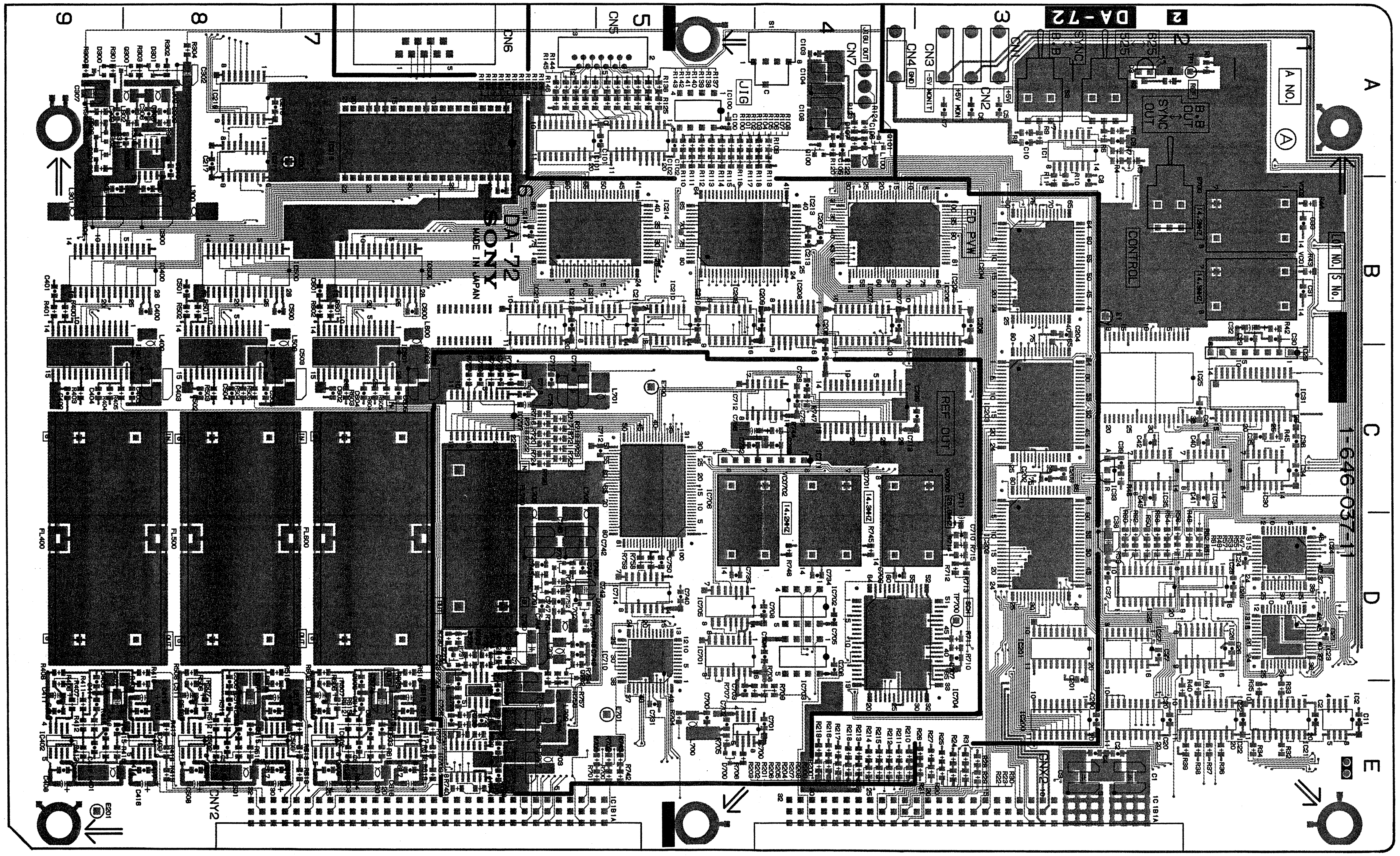

DA-72 -A SIDE-
1-646-037-11
BKDS-6062

4-14

(DVS-6000C ONLY)
DA-72;Analog Edit PVW/REF Output Board

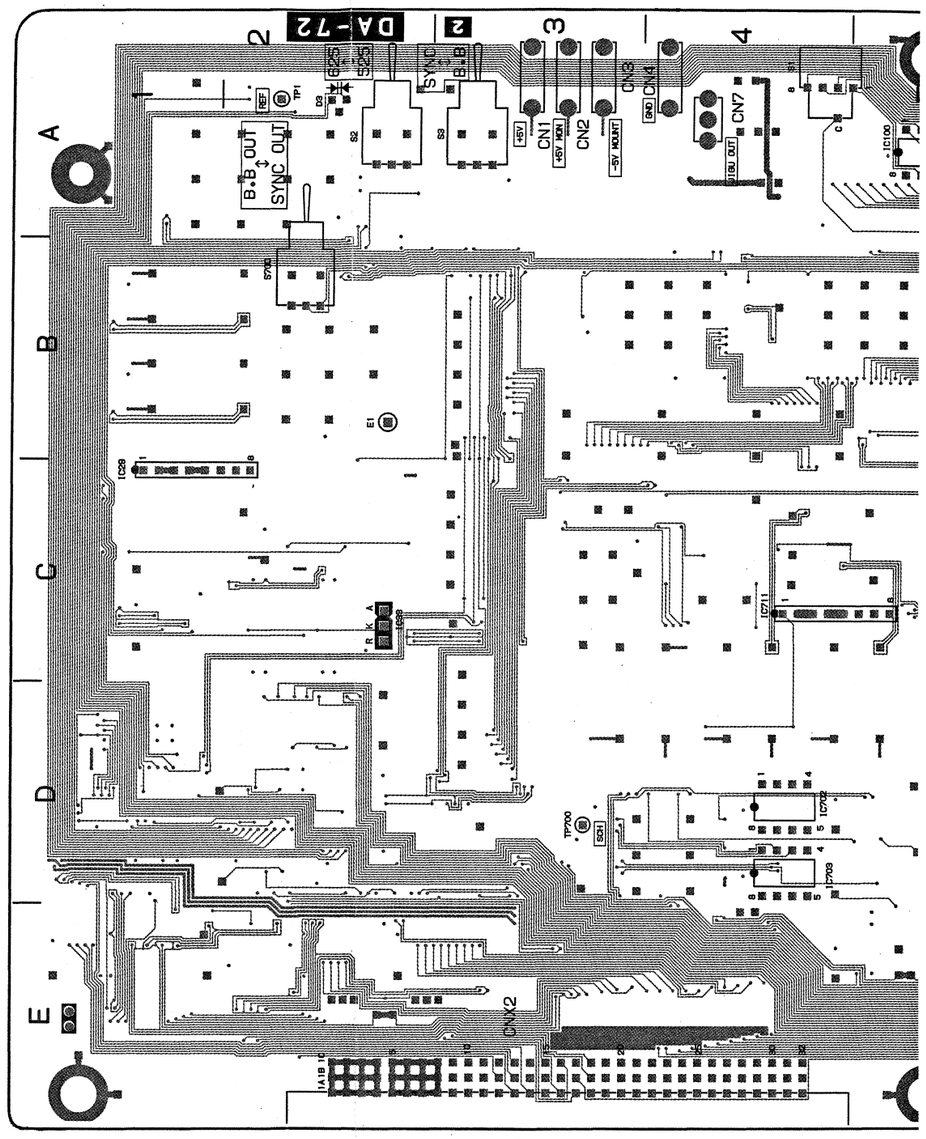

(DVS-6000C ONLY)
DA-72;Analog Edit PVW/REF Output Board

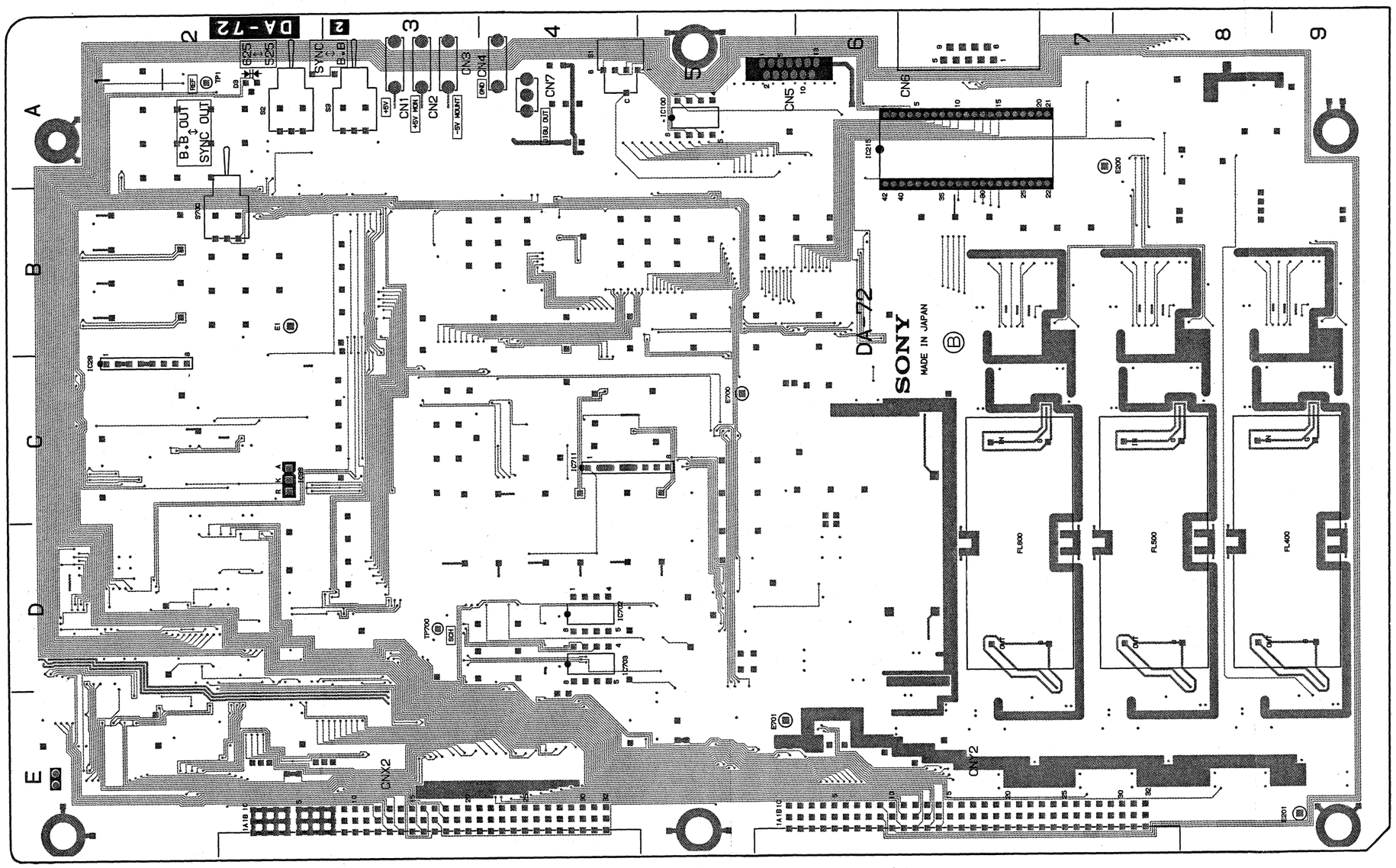

DA-72 -B SIDE-
1-646-037-11
BKDS-6062

WKG-10;Wipe Generator Board

WKG-10(1-646-025-11)

CNA2	B-1	IC211	G-3
		IC212	F-2
CNB2	D-1	IC213	E-3
		IC214	E-1
CNC2	F-1	IC215	E-2
		IC216	G-2
CND2	G-1	IC217	J-2
		IC218	J-1
CNI101	A-4	IC219	H-2
CNI102	A-4	IC220	H-1
CNI201	E-4	IC221	F-6
CNI202	E-4	IC222	F-8
		IC223	E-6
CNX1	B-8	IC224	E-8
CNY1	E-8	TH1	F-8
CNZ1	G-8	TP1	B-6
		TP2	B-6
CN101	C-3	TP3	B-6
CN102	D-3	TP4	C-8
CN103	D-6	TP5	B-8
CN201	H-3	TP6	G-8
CN202	J-3	TP7	G-8
CN203	E-6		
D1	A-8		
E1	A-1		
E2	A-7		
E3	E-4		
E4	H-1		
E5	J-8		
F1	A-8		
IC1	A-6		
IC2	A-6		
IC3	A-6		
IC4	A-8		
IC5	F-8		
IC6	B-7		
IC7	A-8		
IC8	B-8		
IC9	C-6		
IC10	B-6		
IC11	F-6		
IC12	G-6		
IC13	H-7		
IC14	H-8		
IC15	H-6		
IC16	G-7		
IC17	F-8		
IC18	H-8		
IC19	H-8		
IC101	A-4		
IC102	A-4		
IC103	B-4		
IC104	B-5		
IC105	C-5		
IC106	C-4		
IC107	D-5		
IC108	D-4		
IC109	D-3		
IC110	B-3		
IC111	C-3		
IC112	A-2		
IC113	A-3		
IC114	A-1		
IC115	A-2		
IC116	B-2		
IC117	D-2		
IC118	D-1		
IC119	D-2		
IC120	D-1		
IC121	D-6		
IC122	D-8		
IC123	D-6		
IC124	D-8		
IC201	E-4		
IC202	E-4		
IC203	F-4		
IC204	F-5		
IC205	G-5		
IC206	G-6		
IC207	H-5		
IC208	H-4		
IC209	H-3		
IC210	F-1		

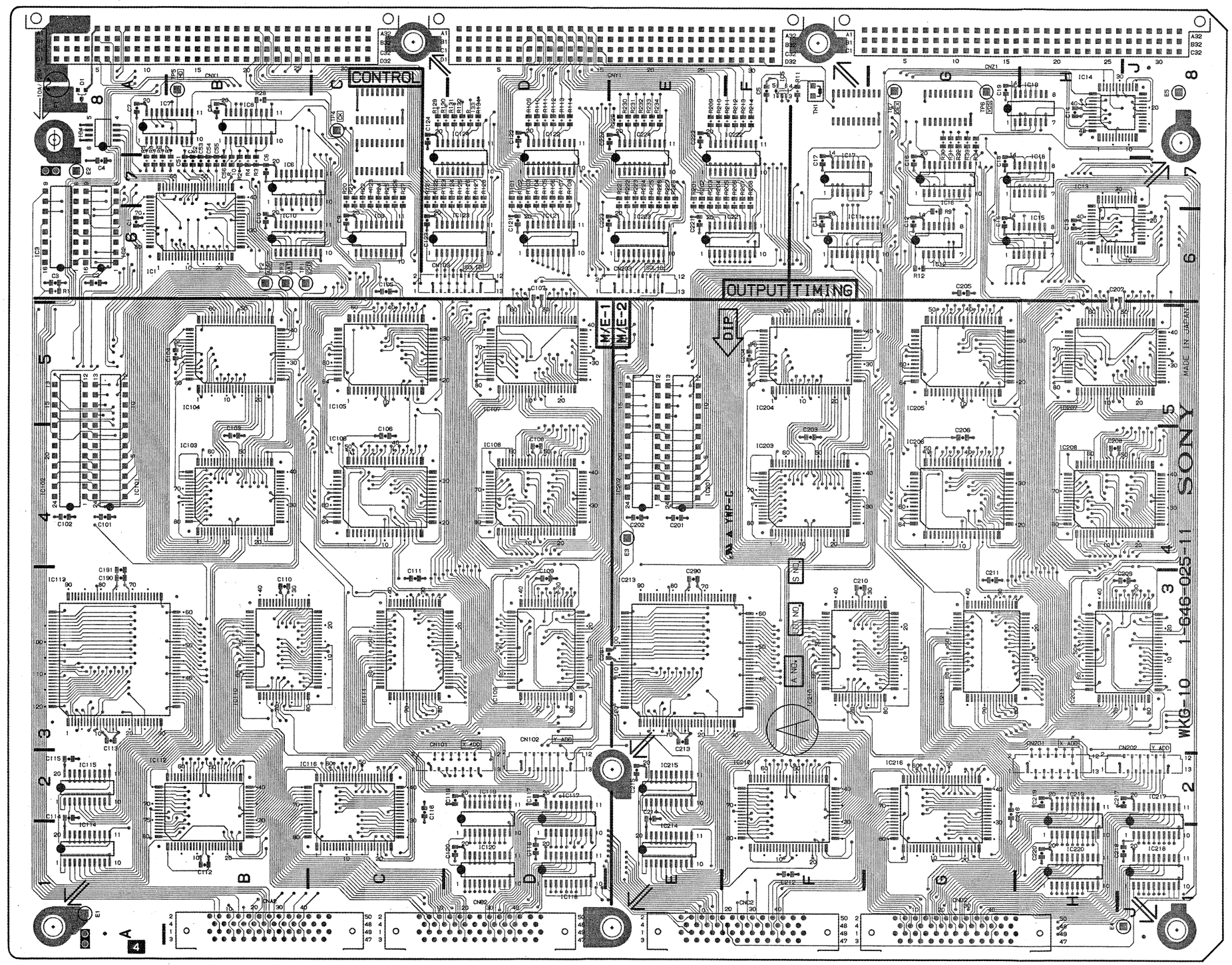

WKG-10 -A SIDE-
1-646-025-11
DVS-6000/6000C

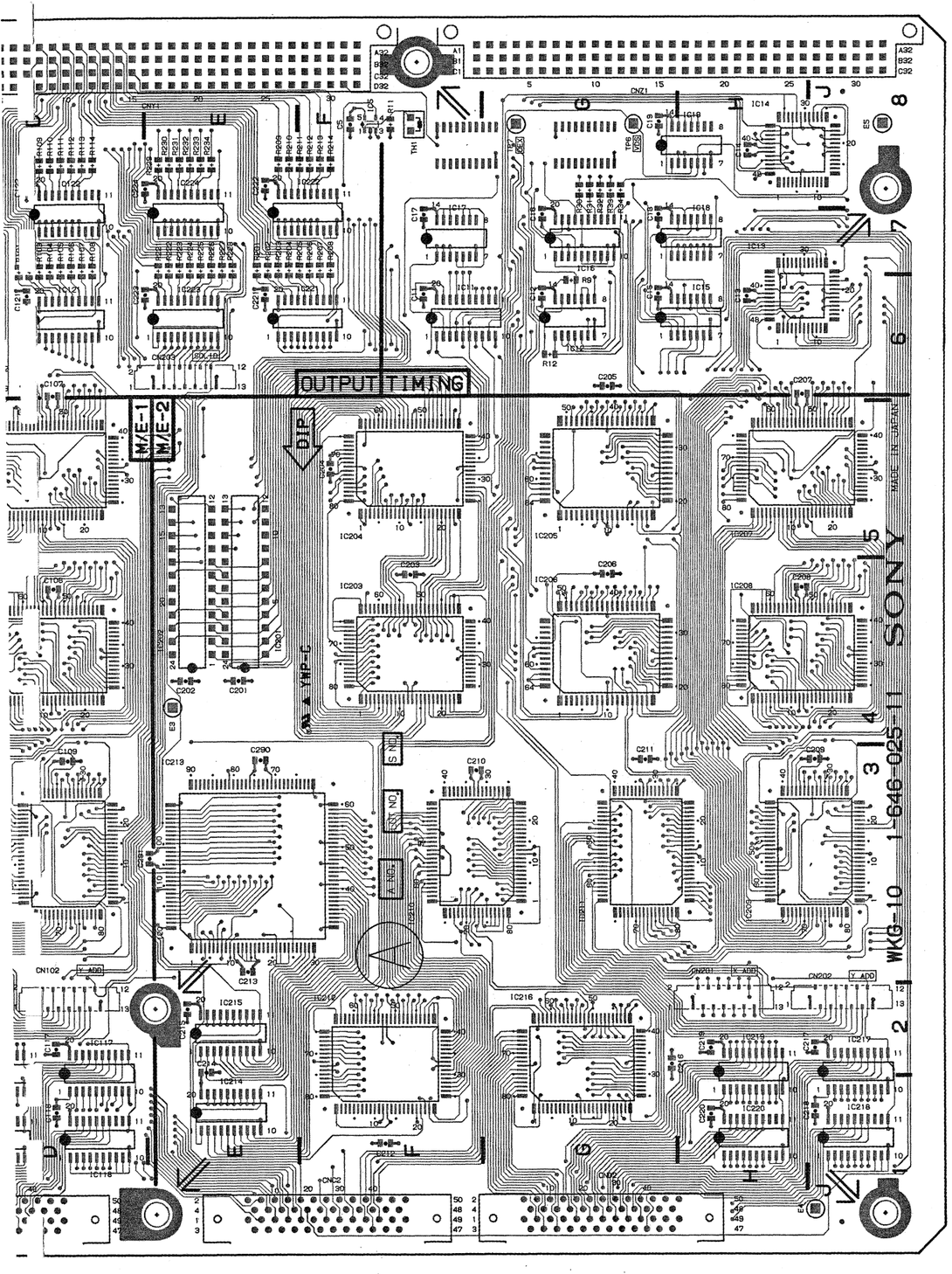

WKG-10 -A SIDE-
1-646-025-11
DVS-6000/6000C

WKG-10;Wipe Generator Board

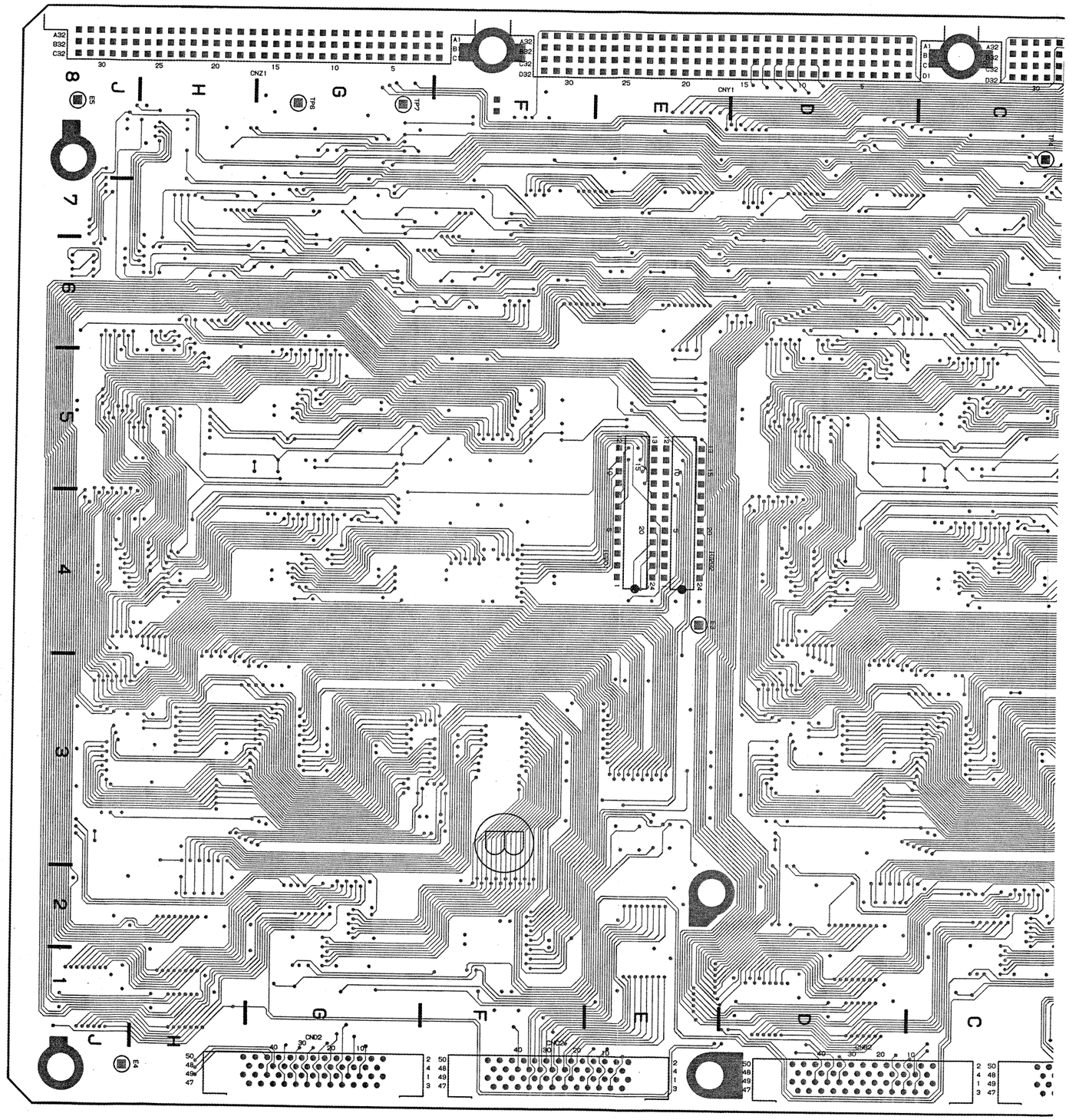

WP-37;Enhanced Wipe Generator Board

WP-37(1-646-038-11)

CNA1	B-9	IC301	N-6
		IC302	N-6
CNB1	F-9	IC303	N-6
		IC304	N-4
CNC1	H-9	IC305	N-7
		IC306	N-4
CND1	K-9	IC307	N-3
		IC308	N-1
CNI417	F-3	IC309	N-6
CNI418	F-5	IC310	L-4
		IC311	M-2
E1	A-6	IC312	K-2
E2	G-6	IC313	J-1
E3	P-3	IC314	K-2
		IC315	N-5
IC101	A-7	IC316	K-4
IC102	A-9	IC317	J-4
IC103	A-6	IC318	J-5
IC104	A-5	IC319	H-4
IC105	B-7	IC320	H-5
IC106	C-6	IC401	G-7
IC107	A-6	IC402	G-8
IC108	B-5	IC403	M-8
IC109	C-5	IC404	M-7
IC201	A-1	IC405	G-6
IC202	A-2	IC406	L-5
IC203	A-3	IC407	J-8
IC204	B-4	IC408	J-7
IC205	B-1	IC409	L-7
IC206	B-2	IC410	L-7
IC207	C-1	IC417	F-3
IC208	C-2	IC418	F-5
IC209	C-3	IC501	E-7
IC210	B-4	IC502	E-6
IC211	D-4	IC503	E-6
IC212	D-2	IC504	E-5
IC213	D-1	IC505	F-8
IC214	E-1	IC506	G-8
IC215	F-1	IC507	J-7
IC216	D-4	IC508	J-6
IC219	G-1	IC509	J-6
IC220	G-4	IC510	J-5
IC221	H-1	IC511	J-8
IC222	H-3	IC512	K-8
IC223	G-3		
IC224	G-5		

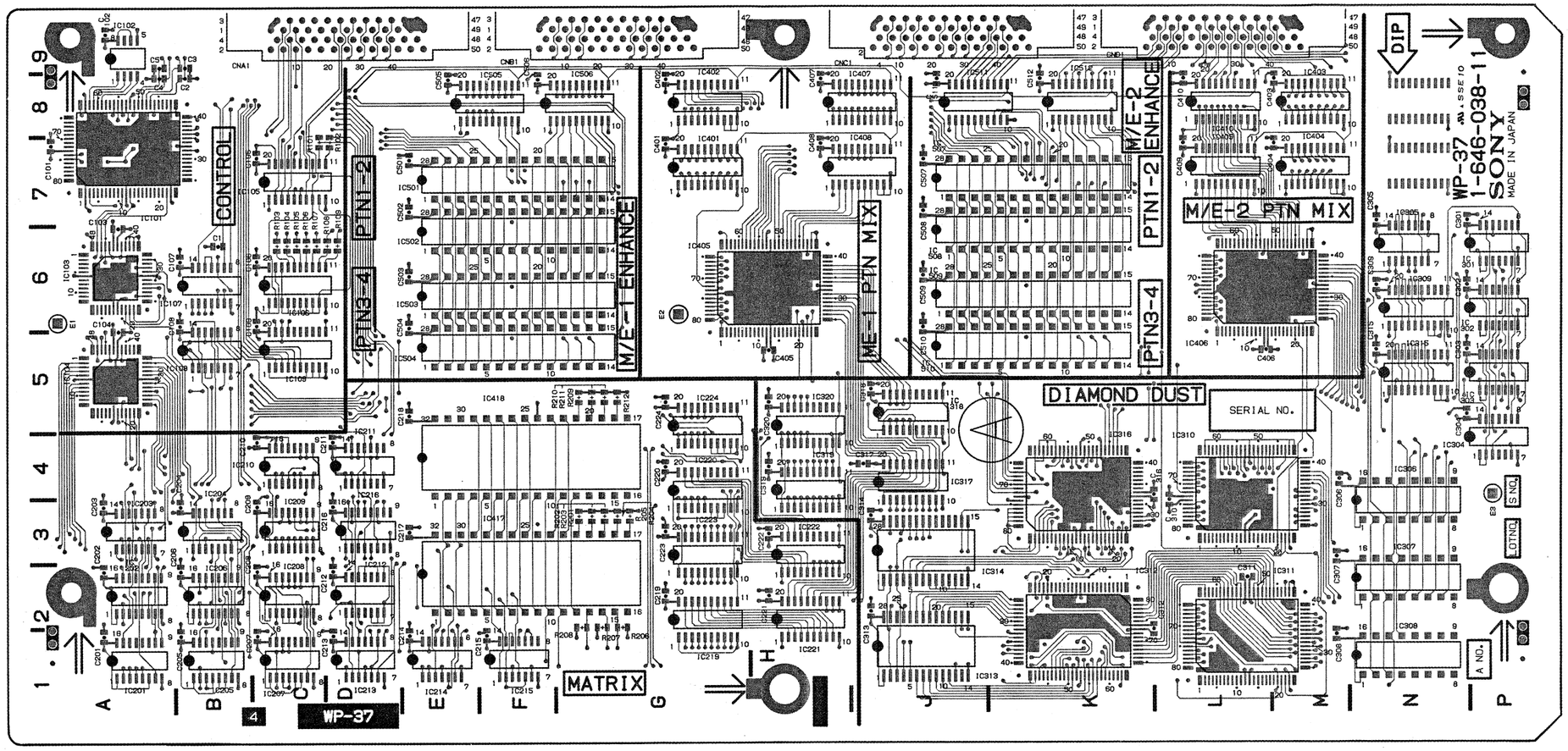

WP-37 -A SIDE-
1-646-038-11
BKDS-6070

-10;Wipe Generator Board

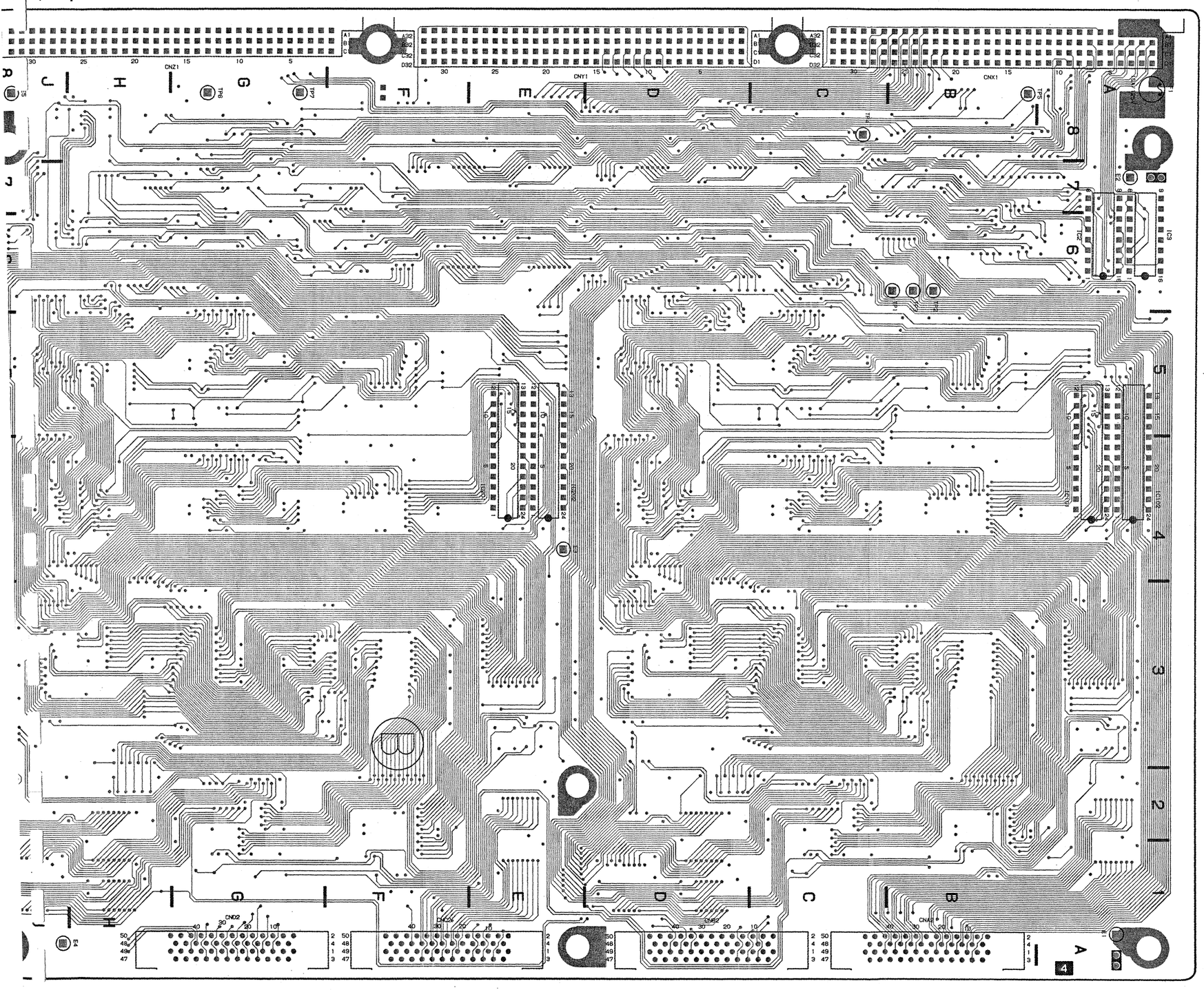

WKG-10(1-646-025-11)

CNA2	B-1	IC121	D-6
		IC122	D-8
CNB2	D-1	IC123	D-6
		IC124	D-8
CNC2	F-1	IC201	E-4
		IC202	E-4
CND2	G-1	IC203	F-4
		IC204	F-5
CNI101	A-4	IC205	G-5
CNI102	A-4	IC206	G-6
CNI201	E-4	IC207	H-5
CNI202	E-4	IC208	H-4
		IC209	H-3
CNX1	B-8	IC210	F-1
		IC211	G-3
CNY1	E-8	IC212	F-2
		IC213	E-3
CNZ1	G-8	IC214	E-1
		IC215	E-2
CN101	C-3	IC216	G-2
CN102	D-3	IC217	J-2
CN103	D-6	IC218	J-1
CN201	H-3	IC219	H-2
CN202	J-3	IC220	H-1
CN203	E-6	IC221	F-6
		IC222	F-8
D1	A-8	IC223	E-6
		IC224	E-8
E1	A-1		
E2	A-7	TH1	F-8
E3	E-4		
E4	H-1	TP1	B-6
E5	J-8	TP2	B-6
		TP3	B-6
F1	A-8	TP4	C-8
		TP5	B-8
IC1	A-6	TP6	G-8
IC2	A-6	TP7	G-8
IC3	A-6		
IC4	A-8		
IC5	F-8		
IC6	B-7		
IC7	A-8		
IC8	B-8		
IC9	C-6		
IC10	B-6		
IC11	F-6		
IC12	G-6		
IC13	H-7		
IC14	H-8		
IC15	H-6		
IC16	G-7		
IC17	F-8		
IC18	H-8		
IC19	H-8		
IC101	A-4		
IC102	A-4		
IC103	B-4		
IC104	B-5		
IC105	C-5		
IC106	C-4		
IC107	D-5		
IC108	D-4		
IC109	D-3		
IC110	B-3		
IC111	C-3		
IC112	A-2		
IC113	A-3		
IC114	A-1		
IC115	A-2		
IC116	B-2		
IC117	D-2		
IC118	D-1		
IC119	D-2		
IC120	D-1		

WKG-10 -B SIDE-
1-646-025-11
DVS-6000/6000C

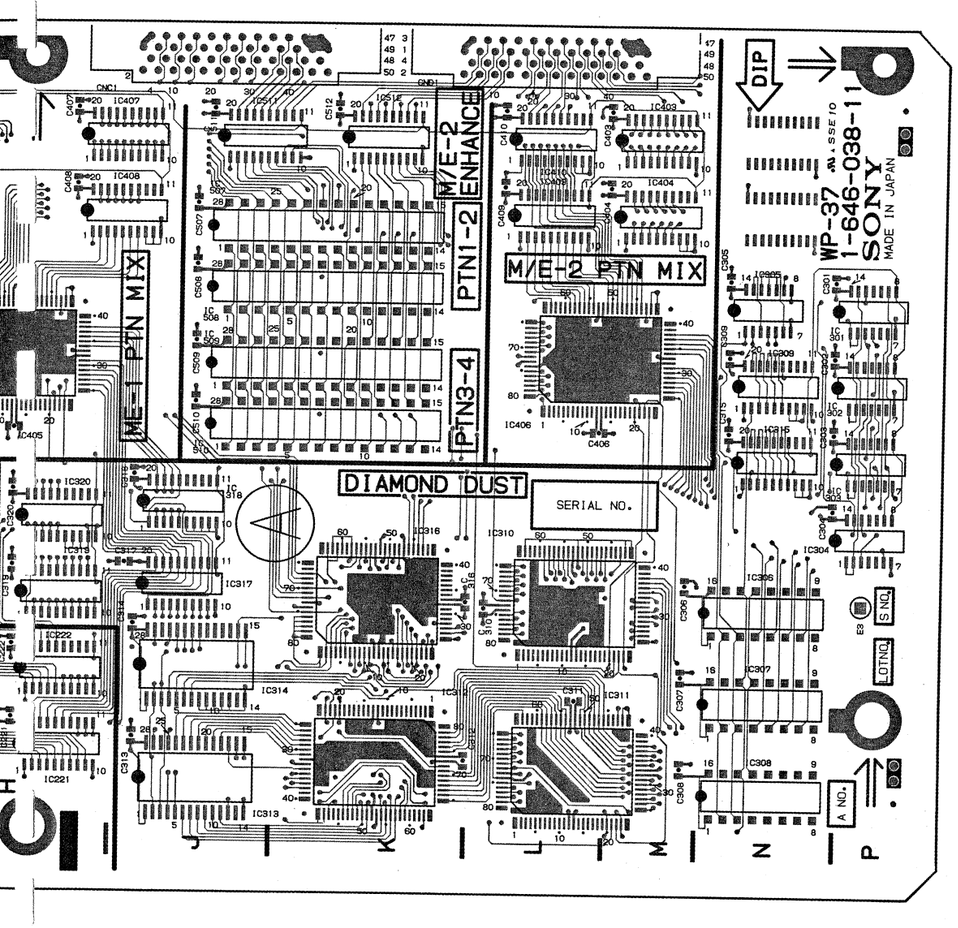

WP-37 -A SIDE-
1-646-038-11
BKDS-6070

WP-37;Enhanced Wipe Generator Board

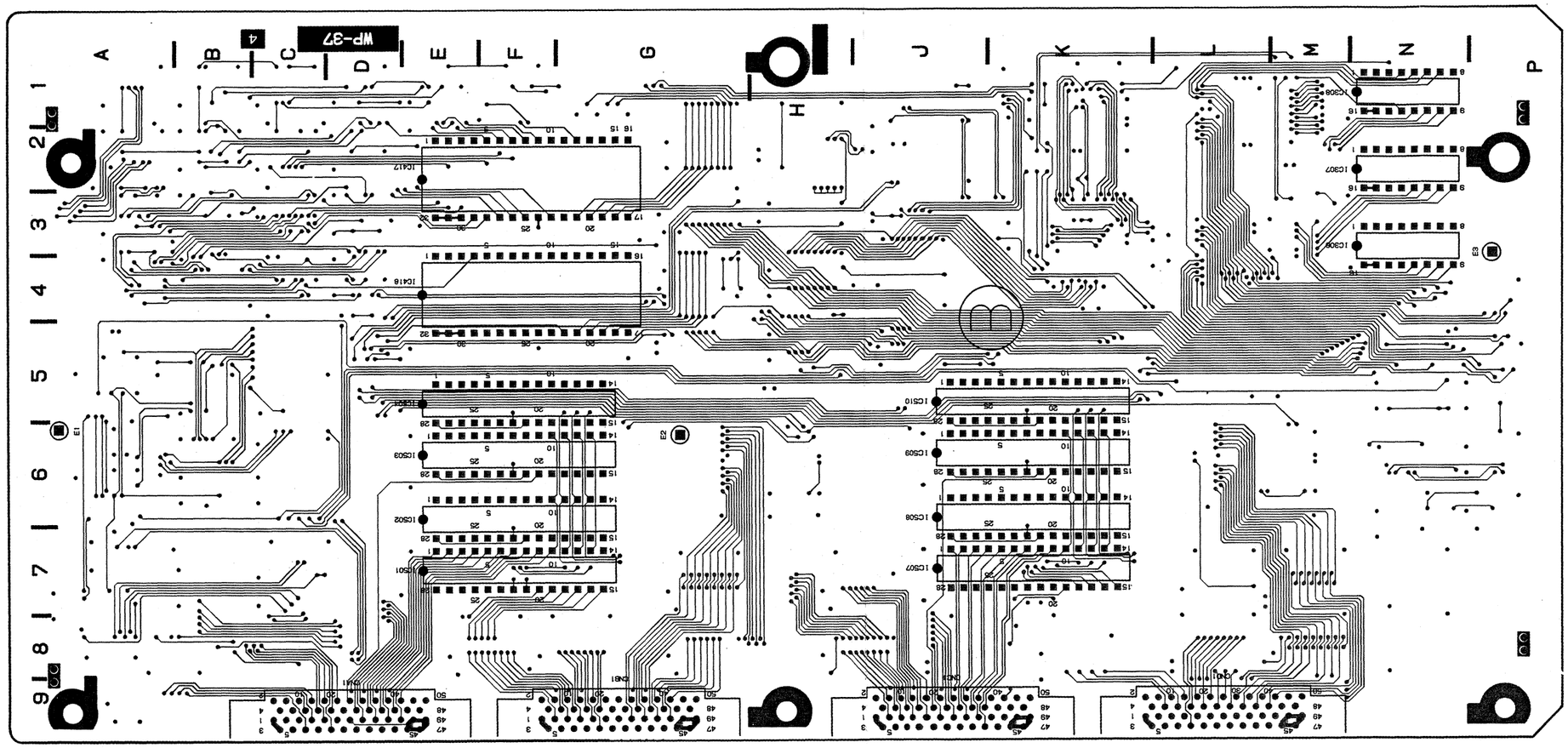

WP-37(1-646-038-11)

CNA1	B-9	IC301	N-6
		IC302	N-6
CNB1	F-9	IC303	N-6
		IC304	N-4
CNC1	H-9	IC305	N-7
		IC306	N-4
CND1	K-9	IC307	N-3
		IC308	N-1
CNI417	F-3	IC309	N-6
CNI418	F-5	IC310	L-4
		IC311	M-2
E1	A-6	IC312	K-2
E2	G-6	IC313	J-1
E3	P-3	IC314	K-2
		IC315	N-5
IC101	A-7	IC316	K-4
IC102	A-9	IC317	J-4
IC103	A-6	IC318	J-5
IC104	A-5	IC319	H-4
IC105	B-7	IC320	H-5
IC106	C-6	IC401	G-7
IC107	A-6	IC402	G-8
IC108	B-5	IC403	M-8
IC109	C-5	IC404	M-7
IC201	A-1	IC405	G-6
IC202	A-2	IC406	L-5
IC203	A-3	IC407	J-8
IC204	B-4	IC408	J-7
IC205	B-1	IC409	L-7
IC206	B-2	IC410	L-7
IC207	C-1	IC417	F-3
IC208	C-2	IC418	F-5
IC209	C-3	IC501	E-7
IC210	B-4	IC502	E-6
IC211	D-4	IC503	E-6
IC212	D-2	IC504	E-5
IC213	D-1	IC505	F-8
IC214	E-1	IC506	G-8
IC215	F-1	IC507	J-7
IC216	D-4	IC508	J-6
IC219	G-1	IC509	J-6
IC220	G-4	IC510	J-5
IC221	H-1	IC511	J-8
IC222	H-3	IC512	K-8
IC223	G-3		
IC224	G-5		

WP-37 -B SIDE-
1-646-038-11
BKDS-6070

4-19

KPC-5;Key Processor Board

KPC-5(1-646-026-11)

CNA2	C-1	IC131	M-2
		IC132	N-3
CNB2	F-1	IC133	M-3
		IC134	P-3
CND2	L-1	IC135	P-1
		IC136	L-17
CNX1	B-19	IC137	M-17
		IC138	L-14
CNY1	G-19	IC139	M-14
		IC145	H-1
CNZ1	N-19	IC146	P-6
		IC147	P-5
CN110	J-2	IC148	P-4
CN111	J-1	IC201	E-11
CN210	B-2	IC202	D-12
CN211	B-1	IC203	E-13
CN300	K-7	IC204	D-13
CN301	M-7	IC205	D-9
CN302	C-14	IC206	D-8
CN310	N-18	IC207	D-11
CN311	L-18	IC208	D-10
		IC209	A-3
COP1	F-7	IC210	A-3
COR1	F-7	IC211	B-6
		IC212	D-6
D1	A-19	IC213	F-5
		IC214	F-6
E1	K-1	IC215	C-1
E2	D-3	IC216	C-2
E3	C-8	IC231	D-1
E4	M-9	IC232	F-3
E5	K-15	IC233	E-3
		IC234	G-3
F1	A-19	IC235	G-1
		IC236	N-17
IC1	A-12	IC237	P-17
IC2	A-14	IC238	N-14
IC3	A-11	IC239	P-14
IC4	B-12	IC245	A-1
IC5	K-19	IC246	G-6
IC6	B-15	IC247	G-5
IC7	B-10	IC248	G-4
IC8	B-17	IC300	D-18
IC9	D-7	IC301	F-18
IC10	C-7	IC302	J-18
IC20	A-18	IC303	J-11
IC21	A-17	IC304	J-18
IC22	B-17	IC305	P-8
IC30	B-18	IC306	N-7
IC31	B-14	IC307	N-11
IC32	C-12	IC308	N-11
IC33	B-11	IC309	N-14
IC34	C-9	IC310	L-11
IC35	C-12	IC311	L-14
IC36	A-14	IC312	M-19
IC37	B-14	IC313	P-19
IC41	E-7	IC314	L-19
IC43	F-8		
IC51	B-8	TH1	K-19
IC52	A-8		
IC53	B-7	TP1	B-9
IC54	A-7	TP2	A-10
IC55	A-9	TP3	B-9
IC100	L-11	TP4	B-17
IC101	G-12	TP5	B-12
IC102	F-12	TP6	A-16
IC103	G-14	TP7	A-18
IC104	F-13	TP8	C-13
IC105	F-9	TP9	B-19
IC106	F-8	TP10	C-12
IC107	F-12		
IC108	F-10		
IC109	H-3		
IC110	H-3		
IC111	J-6		
IC112	L-6		
IC113	N-5		
IC114	N-6		
IC115	K-1		
IC116	K-2		

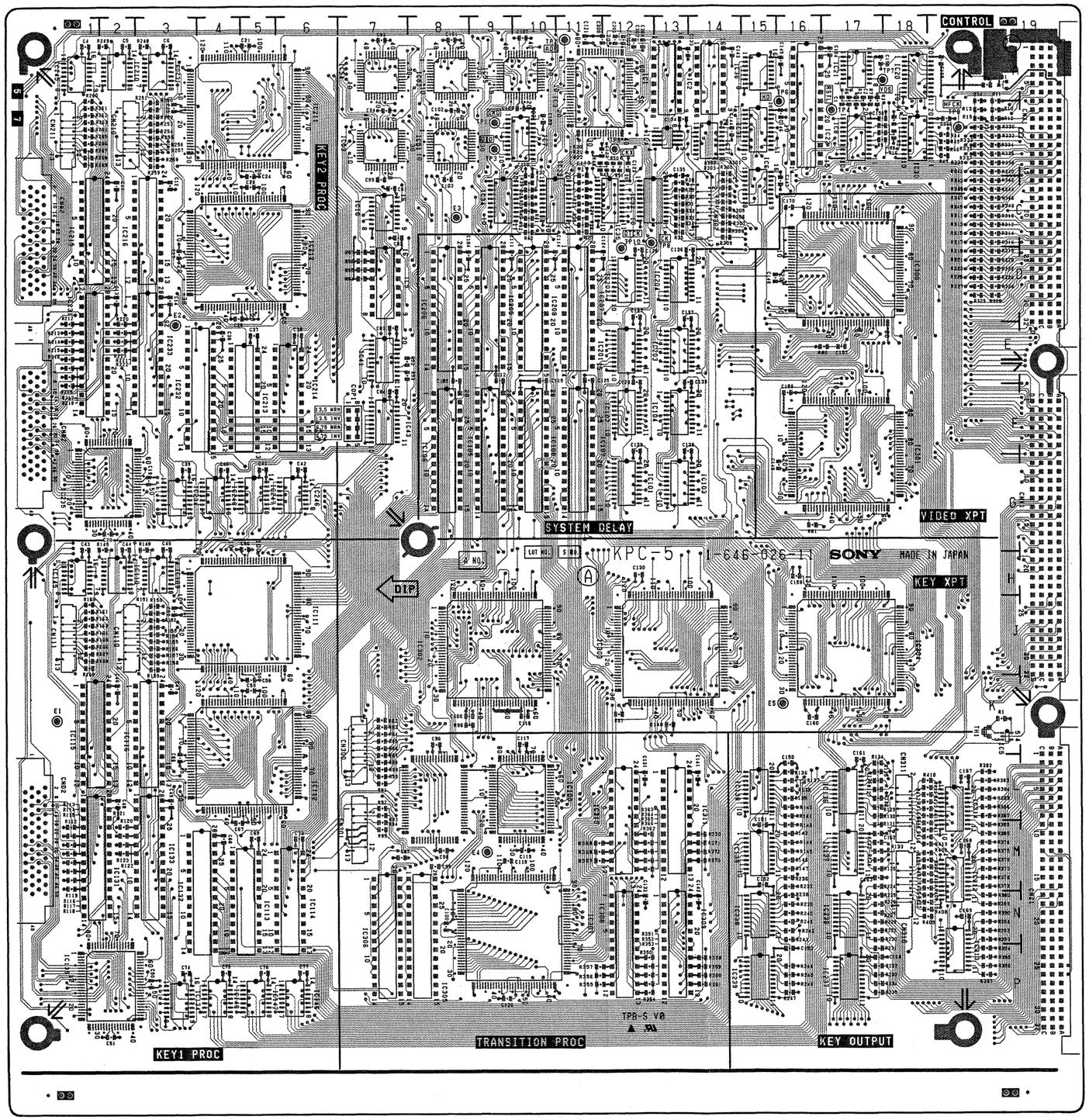

KPC-5 -A SIDE-
1-646-026-11
DVS-6000/6000C

4-20

KPC-5;Key Processor Board

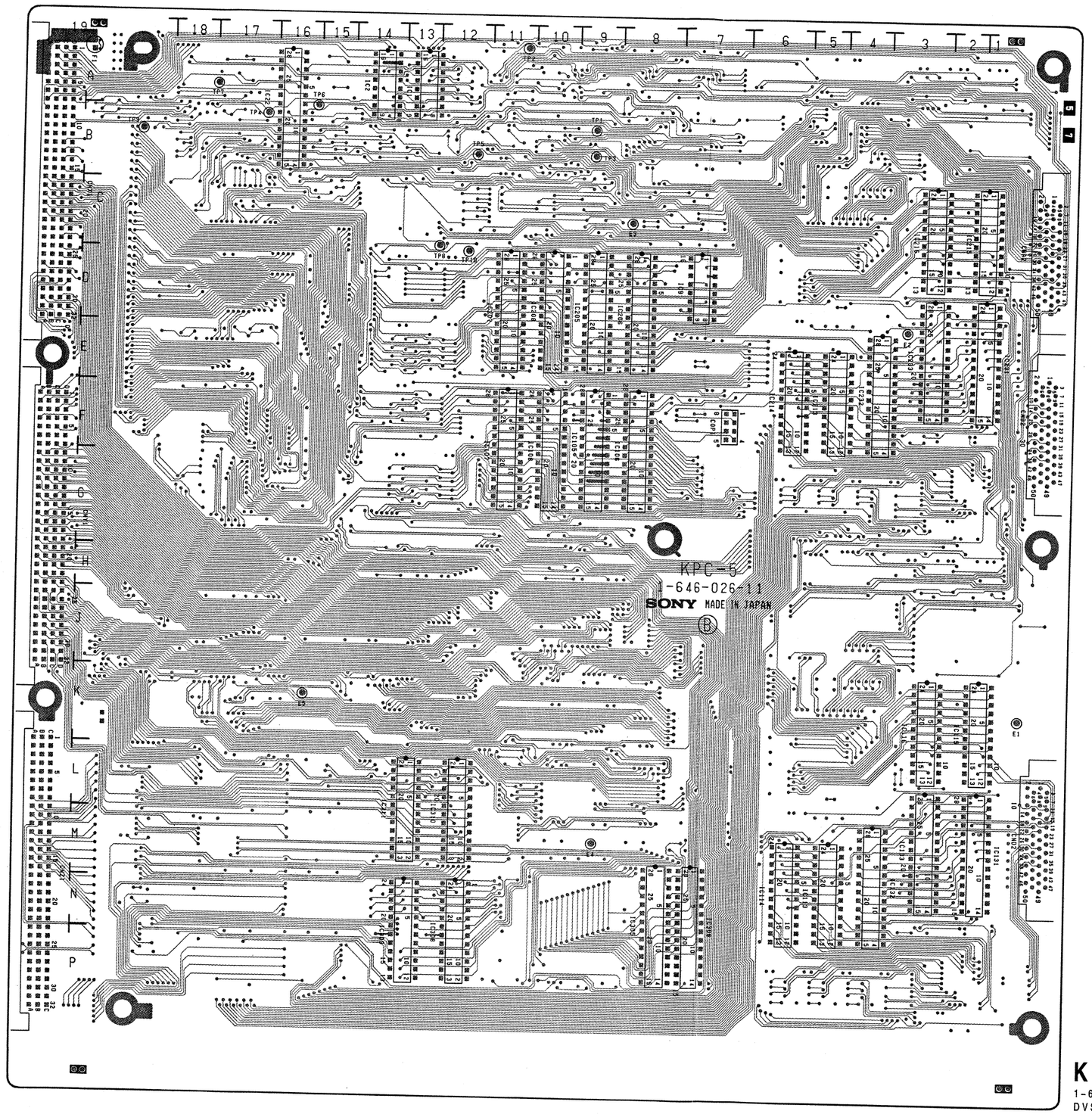

KPC-5(1-646-026-11)

CNA2	C-1	IC131	M-2
		IC132	N-3
CNB2	F-1	IC133	M-3
		IC134	P-3
CND2	L-1	IC135	P-1
		IC136	L-17
CNX1	B-19	IC137	M-17
		IC138	L-14
CNY1	G-19	IC139	M-14
		IC145	H-1
CNZ1	N-19	IC146	P-6
		IC147	P-5
CN110	J-2	IC148	P-4
CN111	J-1	IC201	E-11
CN210	B-2	IC202	D-12
CN211	B-1	IC203	E-13
CN300	K-7	IC204	D-13
CN301	M-7	IC205	D-9
CN302	C-14	IC206	D-8
CN310	N-18	IC207	D-11
CN311	L-18	IC208	D-10
		IC209	A-3
COP1	F-7	IC210	A-3
COR1	F-7	IC211	B-6
		IC212	D-6
D1	A-19	IC213	F-5
		IC214	F-6
E1	K-1	IC215	C-1
E2	D-3	IC216	C-2
E3	C-8	IC231	D-1
E4	M-9	IC232	F-3
E5	K-15	IC233	E-3
		IC234	G-3
F1	A-19	IC235	G-1
		IC236	N-17
IC1	A-12	IC237	P-17
IC2	A-14	IC238	N-14
IC3	A-11	IC239	P-14
IC4	B-12	IC245	A-1
IC5	K-19	IC246	G-6
IC6	B-15	IC247	G-5
IC7	B-10	IC248	G-4
IC8	B-17	IC300	D-18
IC9	D-7	IC301	F-18
IC10	C-7	IC302	J-18
IC20	A-18	IC303	J-11
IC21	A-17	IC304	J-18
IC22	B-17	IC305	P-8
IC30	B-18	IC306	N-7
IC31	B-14	IC307	N-11
IC32	C-12	IC308	N-11
IC33	B-11	IC309	N-14
IC34	C-9	IC310	L-11
IC35	C-12	IC311	L-14
IC36	A-14	IC312	M-19
IC37	B-14	IC313	P-19
IC41	E-7	IC314	L-19
IC43	F-8		
IC51	B-8	TH1	K-19
IC52	A-8		
IC53	B-7	TP1	B-9
IC54	A-7	TP2	A-10
IC55	A-9	TP3	B-9
IC100	L-11	TP4	B-17
IC101	G-12	TP5	B-12
IC102	F-12	TP6	A-16
IC103	G-14	TP7	A-18
IC104	F-13	TP8	C-13
IC105	F-9	TP9	B-19
IC106	F-8	TP10	C-12
IC107	F-12		
IC108	F-10		
IC109	H-3		
IC110	H-3		
IC111	J-6		
IC112	L-6		
IC113	N-5		
IC114	N-6		
IC115	K-1		
IC116	K-2		

KPC-5 -B SIDE-
1-646-026-11
DVS-6000/6000C

4-21

BD-22;Key Border Generator Board

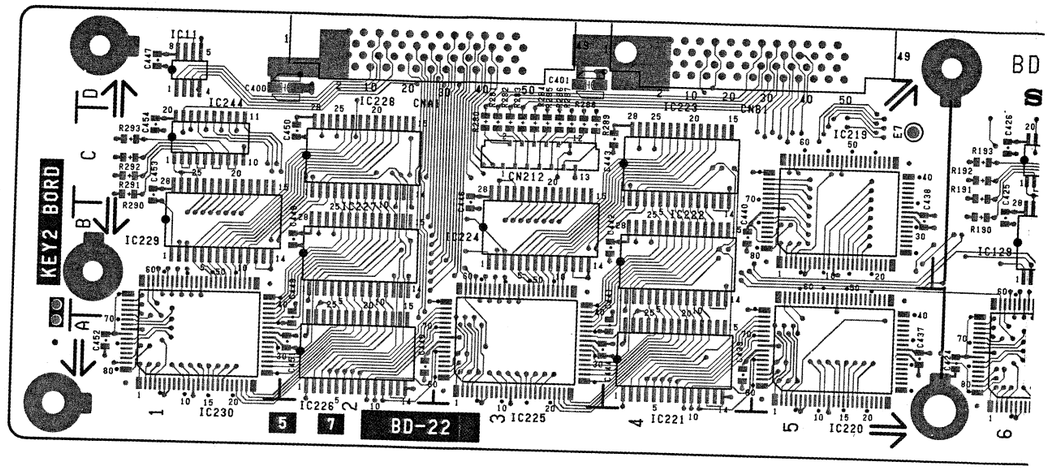

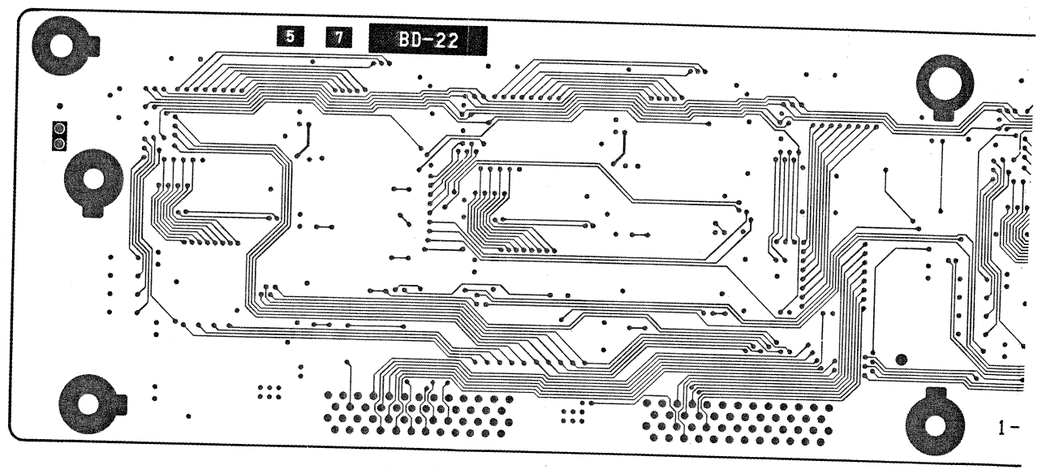

BD-22;Key Border Generator Board

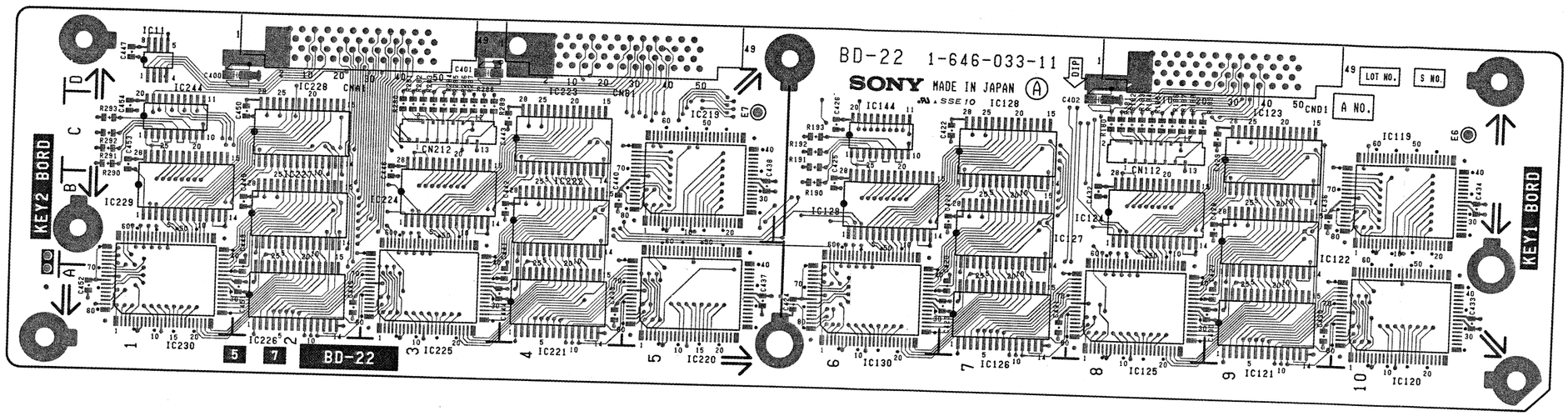

BD-22 -A SIDE-
1-646-033-11
BKDS-6071

BD-22(1-646-033-11)

CNA1	D-2
CNB1	D-4
CND1	D-9
CN112	C-8
CN212	C-3
E6	C-10
E7	C-5
IC11	D-1
IC119	C-10
IC120	A-10
IC121	A-9
IC122	B-9
IC123	D-9
IC124	B-8
IC125	A-8
IC126	A-7
IC127	B-7
IC128	D-7
IC129	B-6
IC130	A-6
IC144	D-6
IC219	C-5
IC220	A-5
IC221	A-4
IC222	B-4
IC223	D-4
IC224	B-3
IC225	A-3
IC226	A-2
IC227	C-2
IC228	D-2
IC229	B-1
IC230	A-1
IC244	D-1

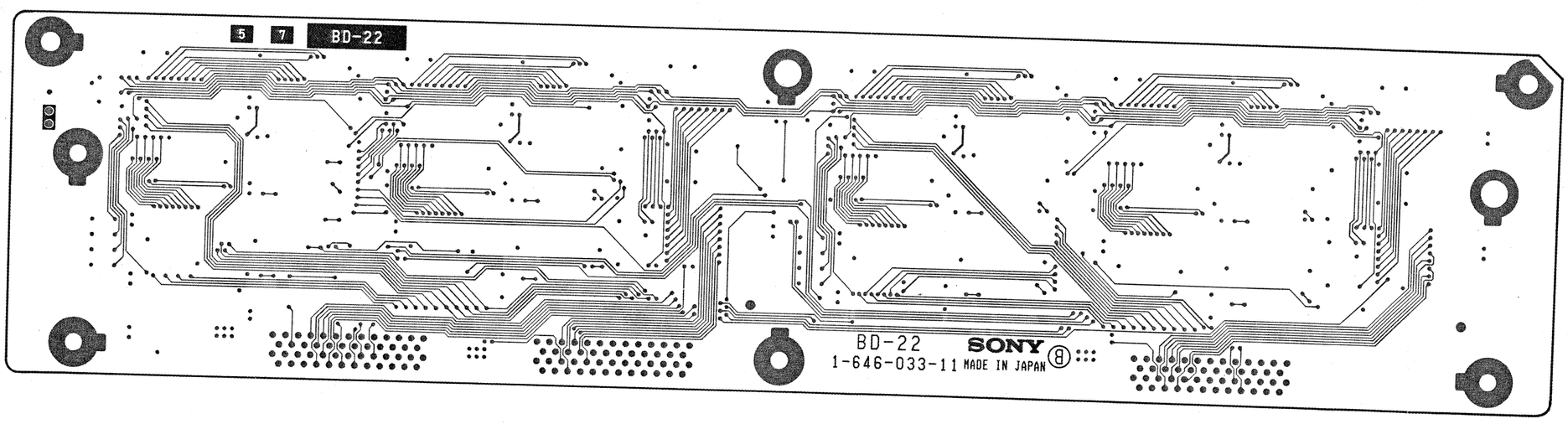

BD-22 -B SIDE-
1-646-033-11
BKDS-6071

MIX-8;Mixer Board

MIX-8(1-646-027-11)

CNX1	B-23	IC321	F-23
		IC322	J-19
CNY1	F-23	IC324	J-18
		IC326	J-17
CNZ1	L-23	IC328	J-16
		IC334	H-6
COP1	D-19	IC336	H-7
COP2	C-19	IC338	E-8
		IC342	G-20
D1	A-23	IC343	H-20
E1	B-21	TH1	H-23
E2	K-21		
E3	F-8	TP1	B-18
E4	A-5	TP2	B-18
E5	L-4	TP3	B-18
		TP4	B-21
F1	A-23	TP5	C-20
		TP6	D-23
IC1	A-22	TP7	D-23
IC2	A-21	TP8	C-23
IC3	A-20	TP9	C-23
IC4	C-21	TP10	C-21
IC5	H-23		
IC7	B-19		
IC8	B-21		
IC20	B-23		
IC21	D-23		
IC22	D-19		
IC30	B-23		
IC31	B-22		
IC32	C-23		
IC33	D-20		
IC34	D-22		
IC35	C-22		
IC36	E-23		
IC37	E-22		
IC51	A-17		
IC52	A-15		
IC54	A-12		
IC55	A-12		
IC101	K-9		
IC103	K-6		
IC104	J-8		
IC106	G-23		
IC107	G-23		
IC108	H-23		
IC109	L-1		
IC110	M-1		
IC111	K-4		
IC112	K-3		
IC113	K-2		
IC114	D-14		
IC115	E-10		
IC116	D-13		
IC117	E-9		
IC118	J-13		
IC120	J-9		
IC122	J-12		
IC124	H-8		
IC201	B-4		
IC203	F-4		
IC204	H-2		
IC206	K-23		
IC207	L-23		
IC208	L-23		
IC209	J-4		
IC210	J-3		
IC211	J-2		
IC212	J-1		
IC213	K-1		
IC214	D-17		
IC215	E-12		
IC216	D-16		
IC217	E-11		
IC218	J-15		
IC220	J-11		
IC222	J-14		
IC224	J-10		
IC300	L-16		
IC302	L-20		
IC306	K-23		
IC307	J-23		
IC308	J-23		
IC312	K-12		
IC313	K-13		
IC314	K-15		
IC320	B-17		

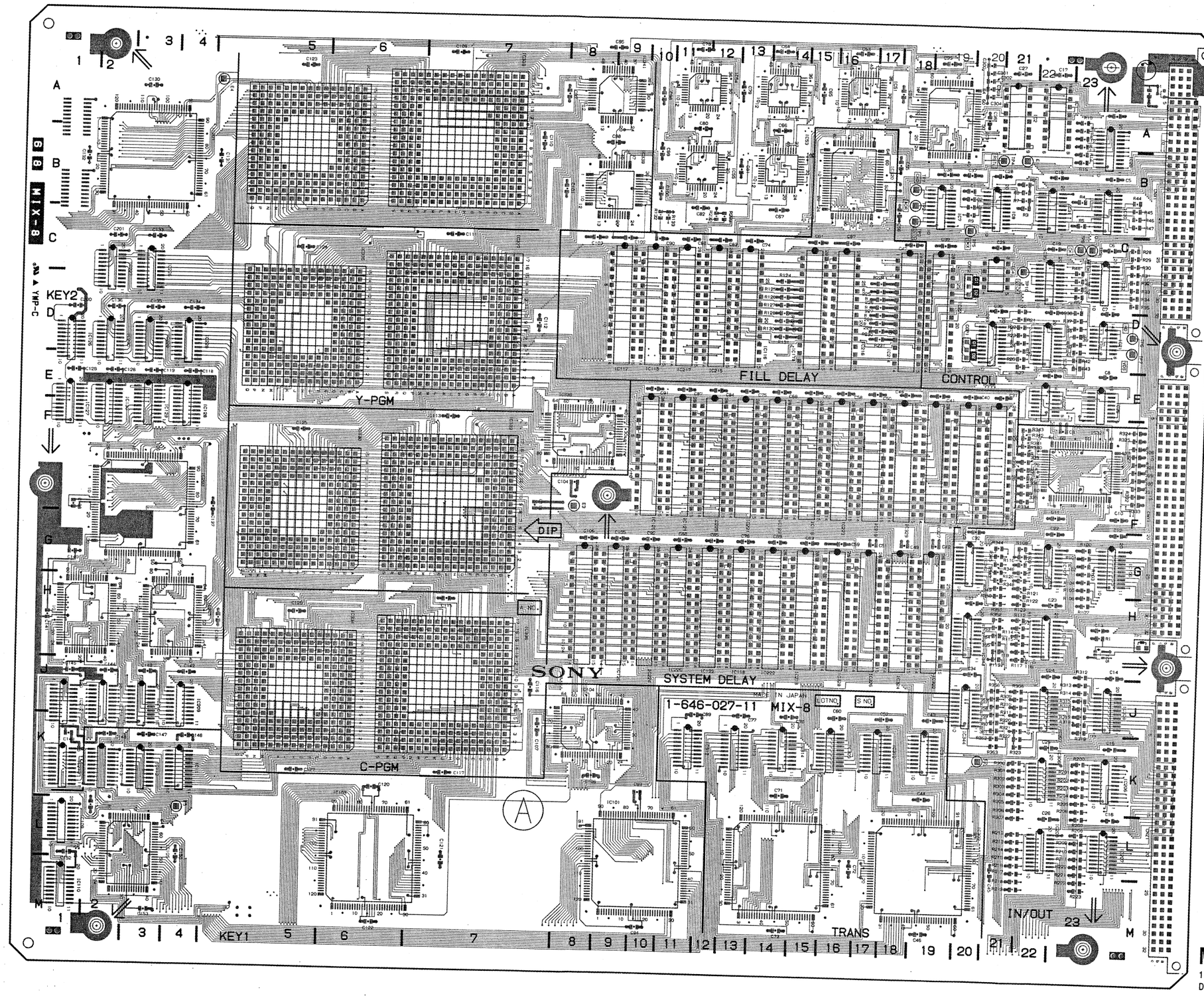

MIX-8 -A SIDE-
1-646-027-11
DVS-6000/6000C

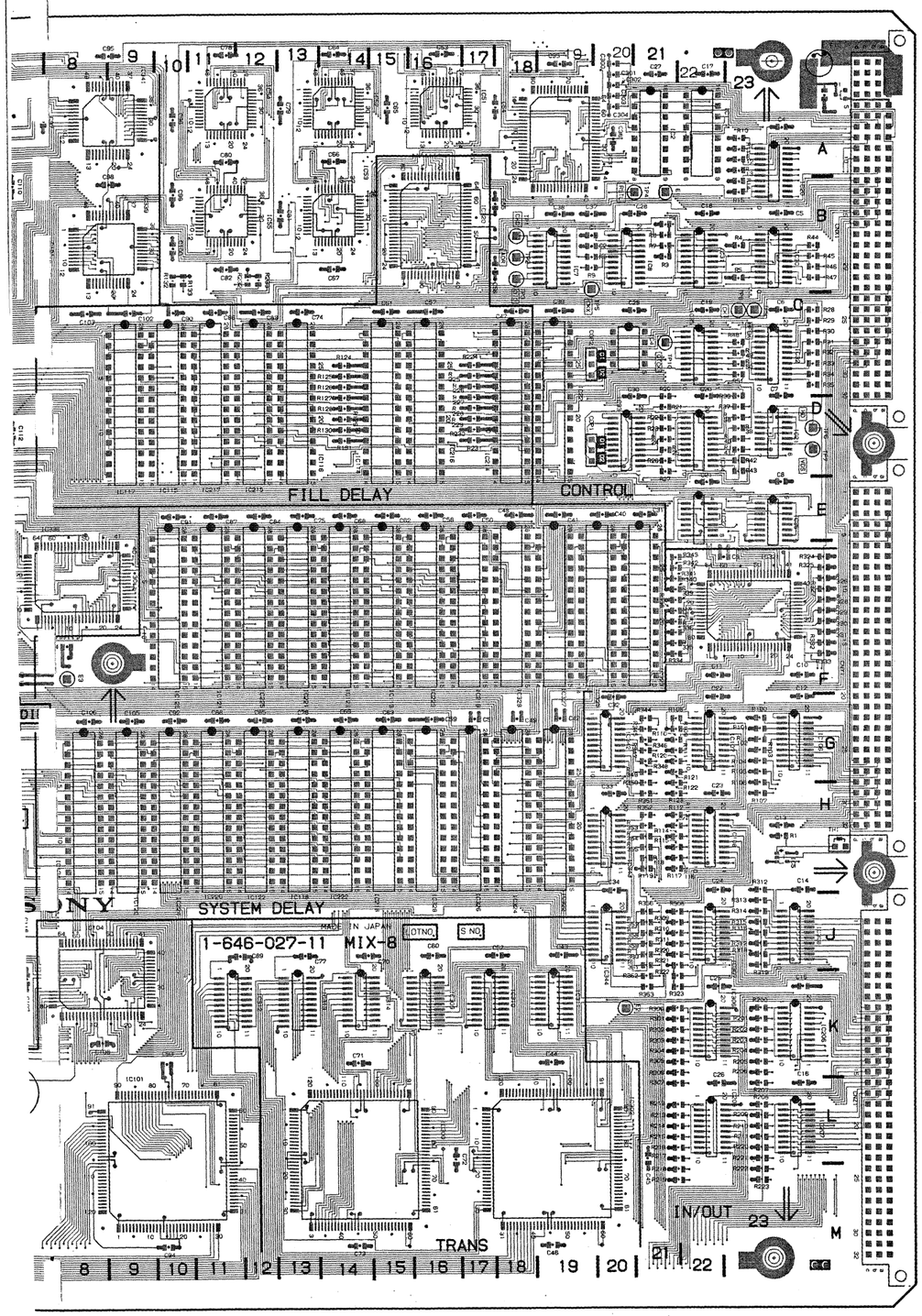

MIX-8 -A SIDE-
1-646-027-11
DVS-6000/6000C

MIX-8;Mixer Board

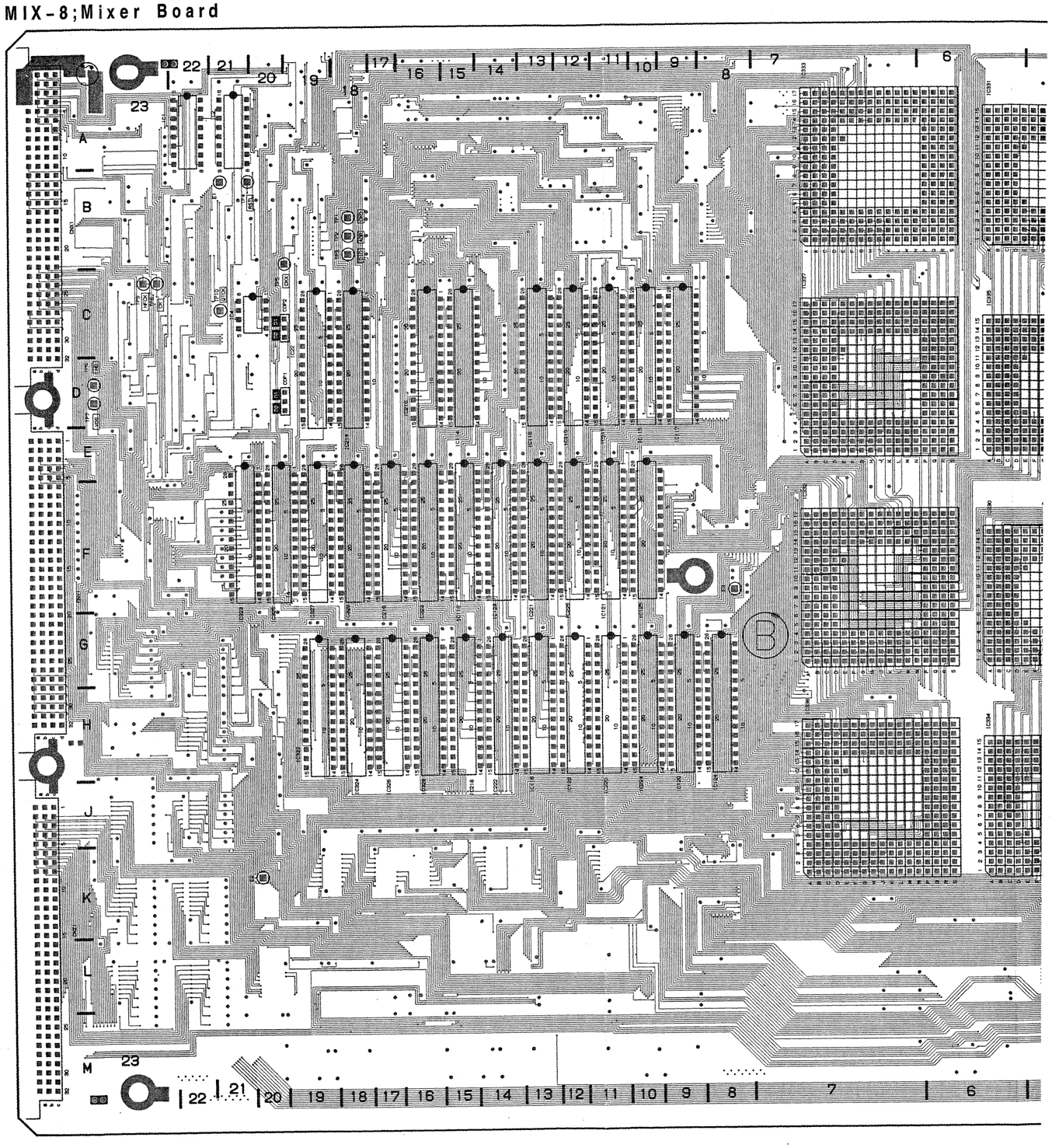

X-8;Mixer Board

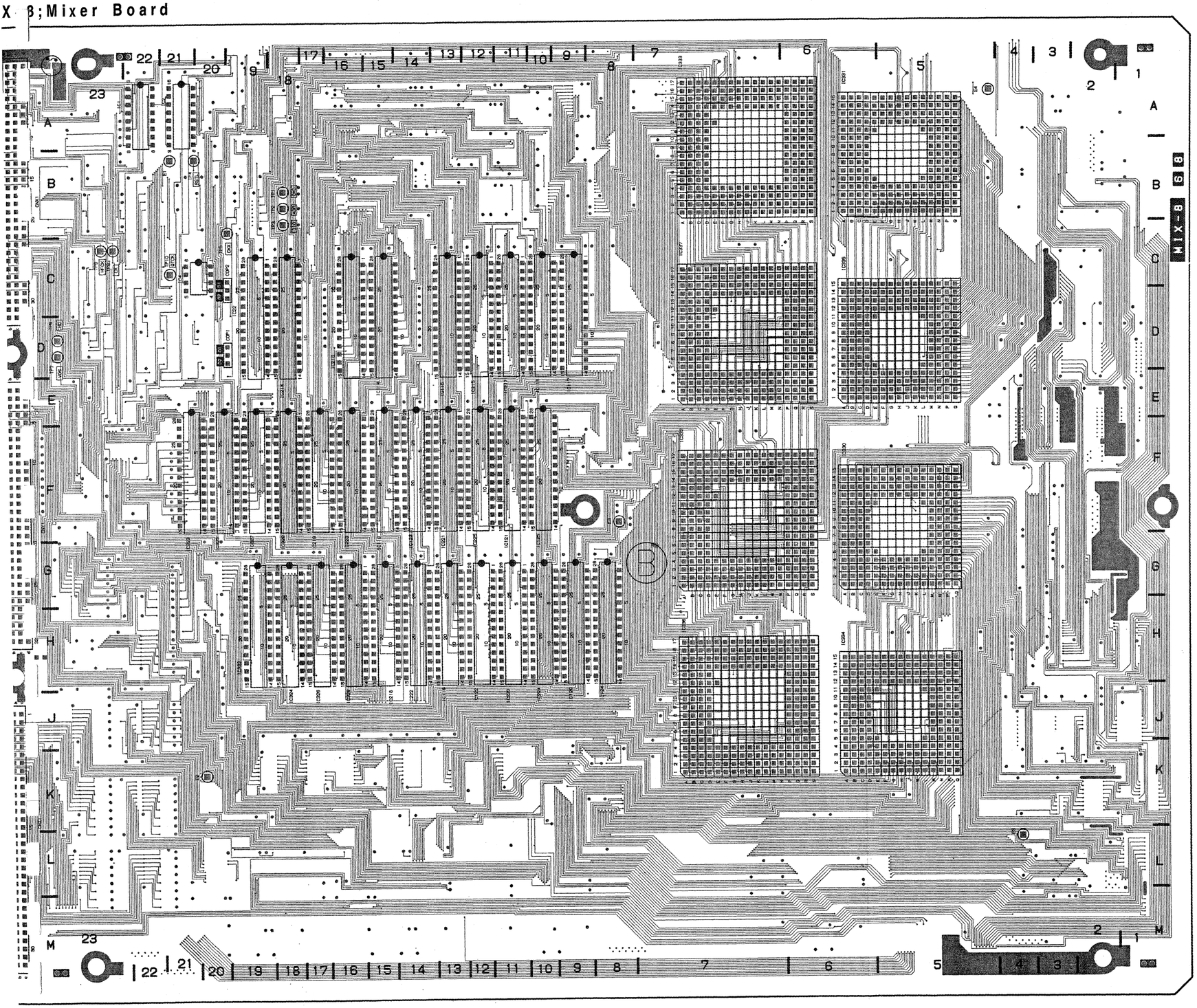

MIX-8(1-646-027-11)

CNX1	B-23	IC321	F-23
		IC322	J-19
CNY1	F-23	IC324	J-18
		IC326	J-17
CNZ1	L-23	IC328	J-16
		IC334	H-6
COP1	D-19	IC336	H-7
COP2	C-19	IC338	E-8
		IC342	G-20
D1	A-23	IC343	H-20
E1	B-21	TH1	H-23
E2	K-21		
E3	F-8	TP1	B-18
E4	A-5	TP2	B-18
E5	L-4	TP3	B-18
		TP4	B-21
F1	A-23	TP5	C-20
		TP6	D-23
IC1	A-22	TP7	D-23
IC2	A-21	TP8	C-23
IC3	A-20	TP9	C-23
IC4	C-21	TP10	C-21
IC5	H-23		
IC7	B-19		
IC8	B-21		
IC20	B-23		
IC21	D-23		
IC22	D-19		
IC30	B-23		
IC31	B-22		
IC32	C-23		
IC33	D-20		
IC34	D-22		
IC35	C-22		
IC36	E-23		
IC37	E-22		
IC51	A-17		
IC52	A-15		
IC54	A-12		
IC55	A-12		
IC101	K-9		
IC103	K-6		
IC104	J-8		
IC106	G-23		
IC107	G-23		
IC108	H-23		
IC109	L-1		
IC110	M-1		
IC111	K-4		
IC112	K-3		
IC113	K-2		
IC114	D-14		
IC115	E-10		
IC116	D-13		
IC117	E-9		
IC118	J-13		
IC120	J-9		
IC122	J-12		
IC124	H-8		
IC201	B-4		
IC203	F-4		
IC204	H-2		
IC206	K-23		
IC207	L-23		
IC208	L-23		
IC209	J-4		
IC210	J-3		
IC211	J-2		
IC212	J-1		
IC213	K-1		
IC214	D-17		
IC215	E-12		
IC216	D-16		
IC217	E-11		
IC218	J-15		
IC220	J-11		
IC222	J-14		
IC224	J-10		
IC300	L-16		
IC302	L-20		
IC306	K-23		
IC307	J-23		
IC308	J-23		
IC312	K-12		
IC313	K-13		
IC314	K-15		
IC320	B-17		

MIX-8 -B SIDE-
1-646-027-11
DVS-6000/6000C

DSK-9;DSK Board

DSK-9(1-646-028-11)

CNX1	C-29	IC156	M-24
		IC157	M-23
CNY1	H-29	IC158	M-22
		IC164	F-29
CNZ1	N-29	IC165	G-29
		IC303	H-22
COP1	D-8	IC304	H-25
		IC305	H-28
D1	D-29	IC306	J-28
		IC307	K-28
E1	C-4	IC308	L-28
E2	A-20	IC309	M-28
E3	N-3	IC310	K-28
E4	M-17	IC311	L-27
E5	H-12	IC312	M-27
		IC315	J-16
F1	A-29	IC317	K-15
		IC319	K-14
IC1	A-28	IC321	J-13
IC2	A-25	IC323	H-12
IC3	A-22	IC325	G-6
IC4	A-22	IC327	G-7
IC5	L-29	IC329	G-8
IC7	B-22	IC331	M-5
IC8	B-29	IC333	M-6
IC9	C-22	IC335	M-7
IC20	C-27	IC337	H-7
IC21	C-24	IC343	K-7
IC22	D-29	IC349	K-7
IC30	C-29	IC355	N-7
IC31	C-21	IC357	M-8
IC32	C-16	IC359	N-7
IC33	C-15	IC365	L-10
IC34	C-12	IC366	L-12
IC35	C-11	IC368	N-19
IC36	B-20	IC371	N-23
IC37	A-20	IC373	P-25
IC38	C-19	IC374	P-27
IC39	C-9	IC375	K-10
IC51	A-17	IC376	K-12
IC52	B-17	IC377	P-29
IC54	B-15		
IC55	A-13	TH1	K-29
IC56	B-13		
IC57	A-10	TP1	B-23
IC58	B-10	TP2	B-22
IC100	H-19	TP3	B-23
IC101	D-27	TP4	B-25
IC102	D-28	TP5	B-27
IC103	E-27	TP6	B-24
IC104	E-28	TP7	D-25
IC105	G-20	TP8	D-17
IC106	G-22	TP9	D-14
IC107	G-23	TP10	D-18
IC108	F-25		
IC109	H-27		
IC110	J-27		
IC111	D-25		
IC112	D-21		
IC119	D-17		
IC120	D-15		
IC121	H-13		
IC122	G-14		
IC123	G-15		
IC124	G-16		
IC125	D-12		
IC126	H-9		
IC127	H-10		
IC128	H-11		
IC129	H-12		
IC130	D-9		
IC131	H-17		
IC132	H-18		
IC133	G-20		
IC135	A-7		
IC136	D-7		
IC139	D-5		
IC140	A-5		
IC142	A-4		
IC143	A-8		
IC144	B-8		
IC145	C-8		
IC147	D-4		
IC148	F-6		
IC149	F-7		
IC150	F-8		
IC151	F-28		
IC152	F-25		
IC153	G-27		
IC155	M-25		

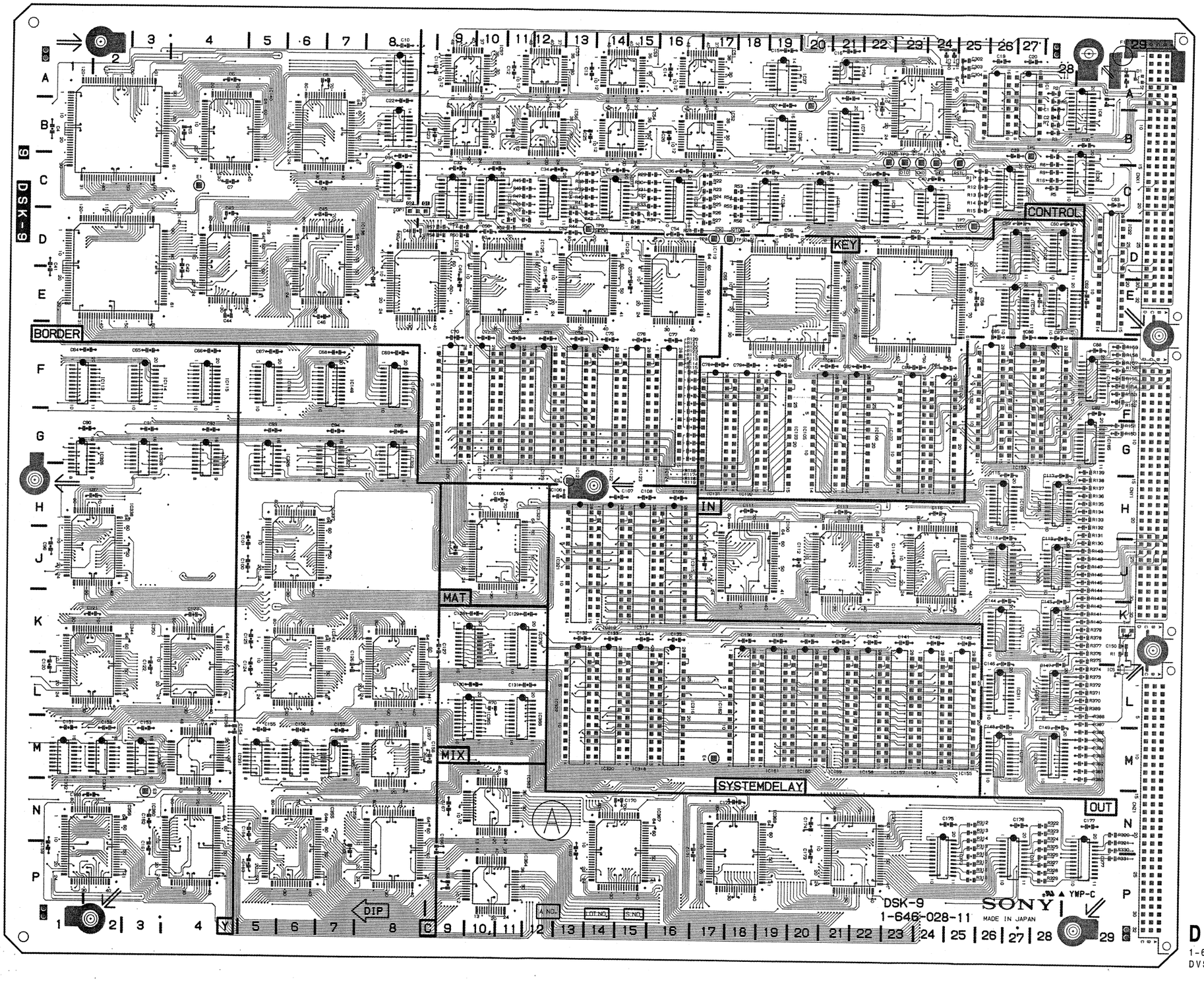

DSK-9 -A SIDE
1-646-028-11
DVS-6000/6000C

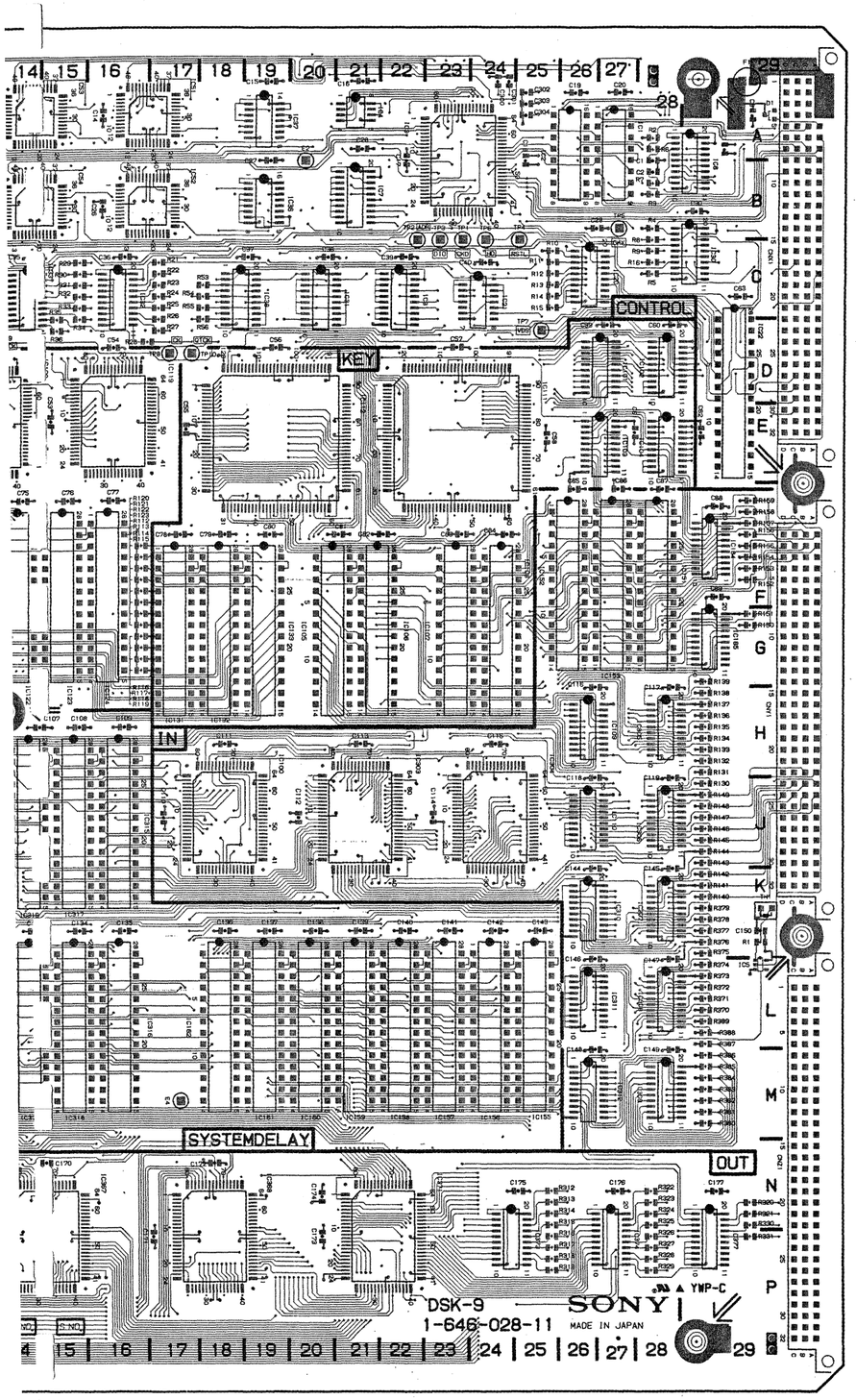

DSK-9 -A SIDE-
1-646-028-11
DVS-6000/6000C

DSK-9;DSK Board

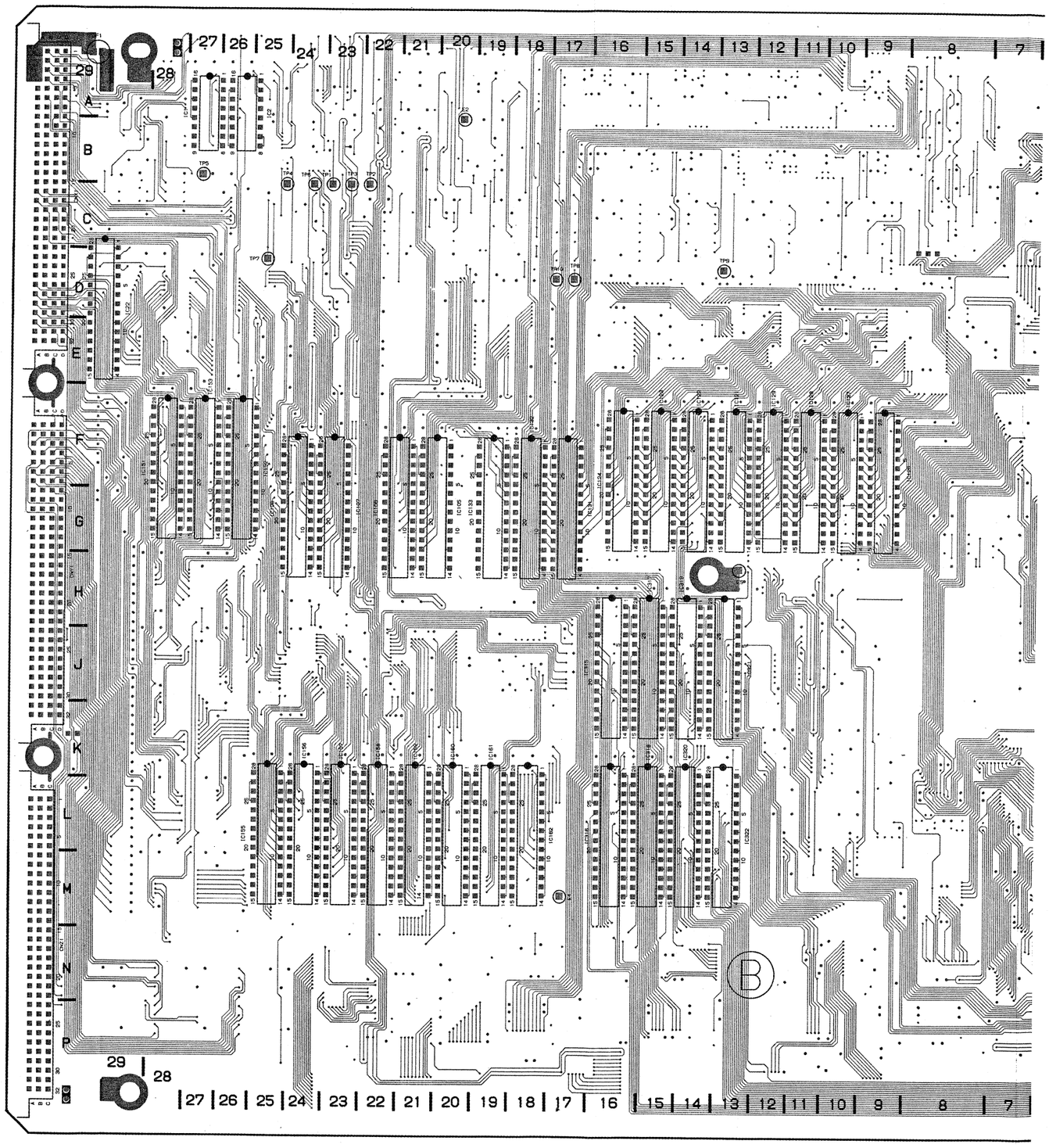

DSK-9;DSK Board

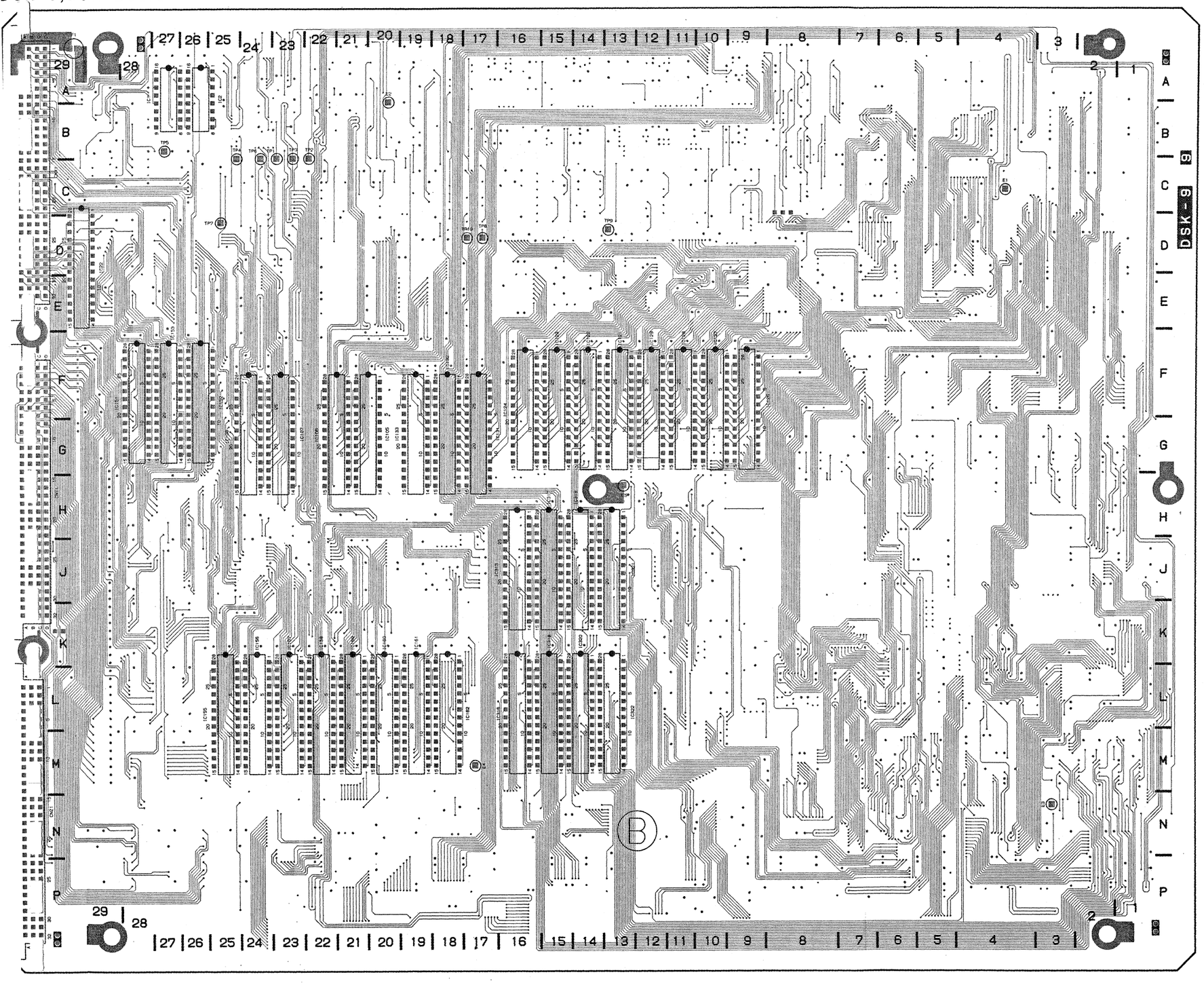

DSK-9 -B SIDE-
1-646-028-11
DVS-6000/6000C

DSK-9(1-646-028-11)

CNX1	C-29	IC156	M-24
		IC157	M-23
CNY1	H-29	IC158	M-22
		IC164	F-29
CNZ1	N-29	IC165	G-29
		IC303	H-22
COP1	D-8	IC304	H-25
		IC305	H-28
D1	D-29	IC306	J-28
		IC307	K-28
E1	C-4	IC308	L-28
E2	A-20	IC309	M-28
E3	N-3	IC310	K-28
E4	M-17	IC311	L-27
E5	H-12	IC312	M-27
		IC315	J-16
F1	A-29	IC317	K-15
		IC319	K-14
IC1	A-28	IC321	J-13
IC2	A-25	IC323	H-12
IC3	A-22	IC325	G-6
IC4	A-22	IC327	G-7
IC5	L-29	IC329	G-8
IC7	B-22	IC331	M-5
IC8	B-29	IC333	M-6
IC9	C-22	IC335	M-7
IC20	C-27	IC337	H-7
IC21	C-24	IC343	K-7
IC22	D-29	IC349	K-7
IC30	C-29	IC355	N-7
IC31	C-21	IC357	M-8
IC32	C-16	IC359	N-7
IC33	C-15	IC365	L-10
IC34	C-12	IC366	L-12
IC35	C-11	IC368	N-19
IC36	B-20	IC371	N-23
IC37	A-20	IC373	P-25
IC38	C-19	IC374	P-27
IC39	C-9	IC375	K-10
IC51	A-17	IC376	K-12
IC52	B-17	IC377	P-29
IC54	B-15		
IC55	A-13	TH1	K-29
IC56	B-13		
IC57	A-10	TP1	B-23
IC58	B-10	TP2	B-22
IC100	H-19	TP3	B-23
IC101	D-27	TP4	B-25
IC102	D-28	TP5	B-27
IC103	E-27	TP6	B-24
IC104	E-28	TP7	D-25
IC105	G-20	TP8	D-17
IC106	G-22	TP9	D-14
IC107	G-23	TP10	D-18
IC108	F-25		
IC109	H-27		
IC110	J-27		
IC111	D-25		
IC112	D-21		
IC119	D-17		
IC120	D-15		
IC121	H-13		
IC122	G-14		
IC123	G-15		
IC124	G-16		
IC125	D-12		
IC126	H-9		
IC127	H-10		
IC128	H-11		
IC129	H-12		
IC130	D-9		
IC131	H-17		
IC132	H-18		
IC133	G-20		
IC135	A-7		
IC136	D-7		
IC139	D-5		
IC140	A-5		
IC142	A-4		
IC143	A-8		
IC144	B-8		
IC145	C-8		
IC147	D-4		
IC148	F-6		
IC149	F-7		
IC150	F-8		
IC151	F-28		
IC152	F-25		
IC153	G-27		
IC155	M-25		

OUT-3;Output Processor Board

OUT-3(1-646-029-11)

CNA10	H-2	IC19	C-3
CNA11	J-4	IC20	A-12
CNA12	J-6	IC22	B-1
CNA13	J-8	IC23	A-3
CNA14	J-10	IC24	C-6
CNA15	J-12	IC25	C-5
CNA16	J-14	IC26	F-1
CNA17	J-16	IC27	E-1
CNA18	J-18	IC28	E-1
CNA19	H-20	IC29	E-6
		IC30	E-5
CNB10	H-2	IC32	C-1
CNB11	J-4	IC33	D-1
CNB12	J-6	IC34	E-2
CNB13	J-8	IC35	D-2
CNB14	J-10	IC36	B-8
CNB15	J-12	IC37	G-5
CNB16	J-14	IC38	B-4
CNB17	J-16	IC39	G-7
CNB18	J-18	IC40	H-5
CNB19	H-20	IC41	H-7
		IC42	E-3
CNC10	J-2	IC43	D-4
CNC11	J-4	IC44	D-4
CNC12	J-6	IC46	A-4
CNC13	J-8	IC47	A-5
CNC14	J-10	IC101	F-19
CNC15	J-12	IC102	F-20
CNC16	J-14	IC103	G-12
CNC17	J-16	IC104	G-13
CNC18	J-18	IC105	G-14
CNC19	H-20	IC106	E-14
		IC107	E-15
CND10	J-2	IC108	F-16
CND11	J-4	IC109	E-17
CND12	J-6	IC110	F-18
CND13	J-8	IC111	D-18
CND14	J-10	IC112	D-19
CND15	J-12	IC113	D-20
CND16	J-14	IC114	D-14
CND17	J-16	IC115	D-15
CND18	J-18	IC116	D-17
CND19	H-2	IC117	D-17
		IC118	C-15
CNE10	N-2	IC119	C-16
CNE11	P-4	IC120	C-17
CNE12	P-6	IC121	C-18
CNE13	P-8	IC122	C-19
CNE14	P-10	IC123	F-15
CNE15	P-12	IC124	F-16
CNE16	P-14	IC125	G-17
CNE17	P-16	IC126	G-18
CNE18	P-18	IC127	C-20
CNE19	N-20	IC128	C-10
		IC129	D-9
CNX1	B-21	IC130	A-9
CNY1	H-22	Q1	B-11
		Q2	B-13
CNZ1	M-22	Q3	B-12
D1	B-20	TH1	K-22
D2	B-20		
		TP1	B-7
E1	B-15	TP2	B-8
E2	B-9	TP3	B-8
E3	G-9	TP4	C-1
E4	L-22		
E5	B-4	X1	D-3
F1	A-21		
F2	A-21		
IC1	A-16		
IC2	A-17		
IC3	K-22		
IC4	A-12		
IC5	C-5		
IC6	F-2		
IC7	E-2		
IC9	C-4		
IC10	B-2		
IC11	C-2		
IC13	A-15		
IC14	A-13		
IC15	D-2		
IC16	D-3		
IC17	A-10		
IC18	A-1		

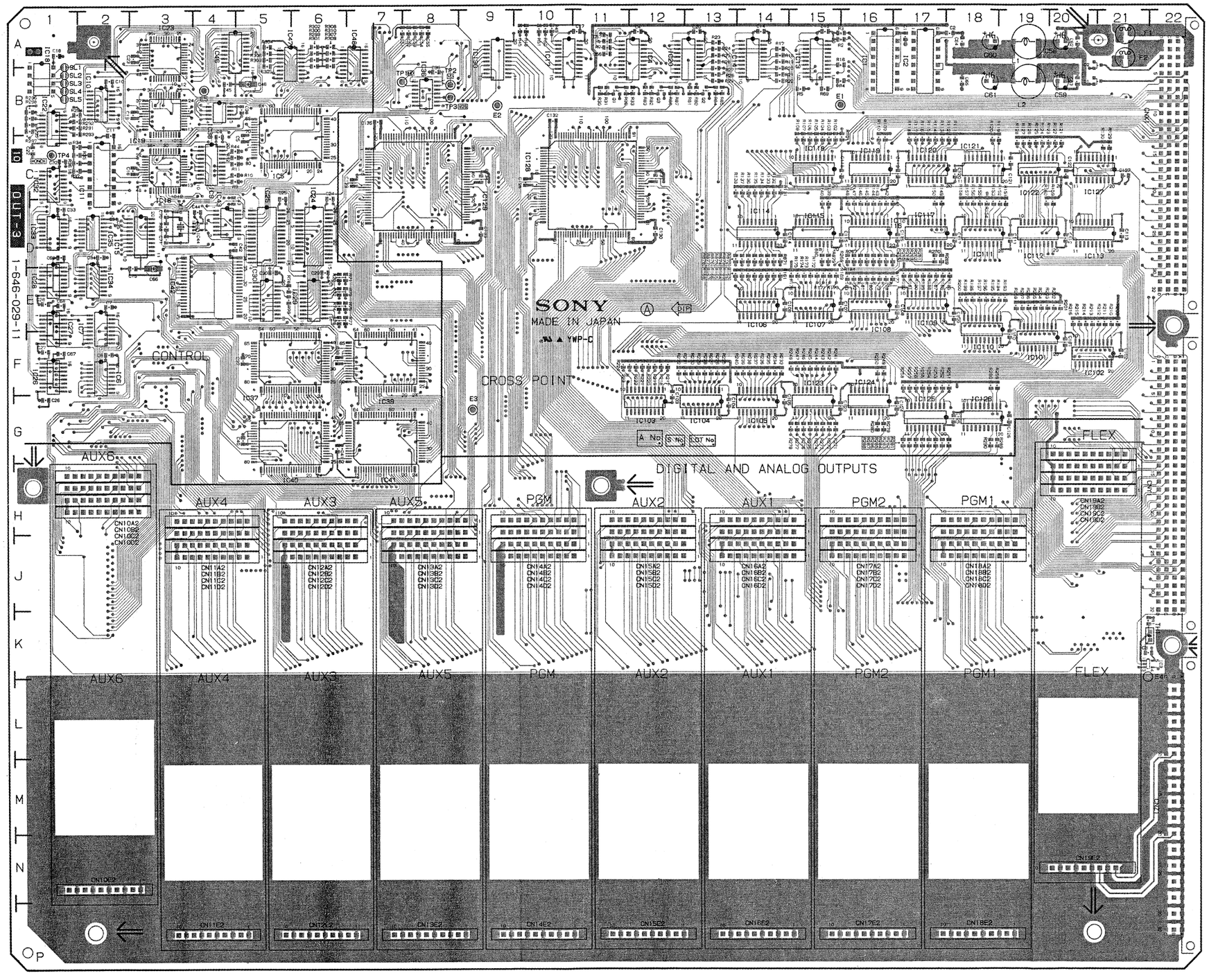

OUT-3 -A SIDE-
1-646-029-11
DVS-6000/6000C

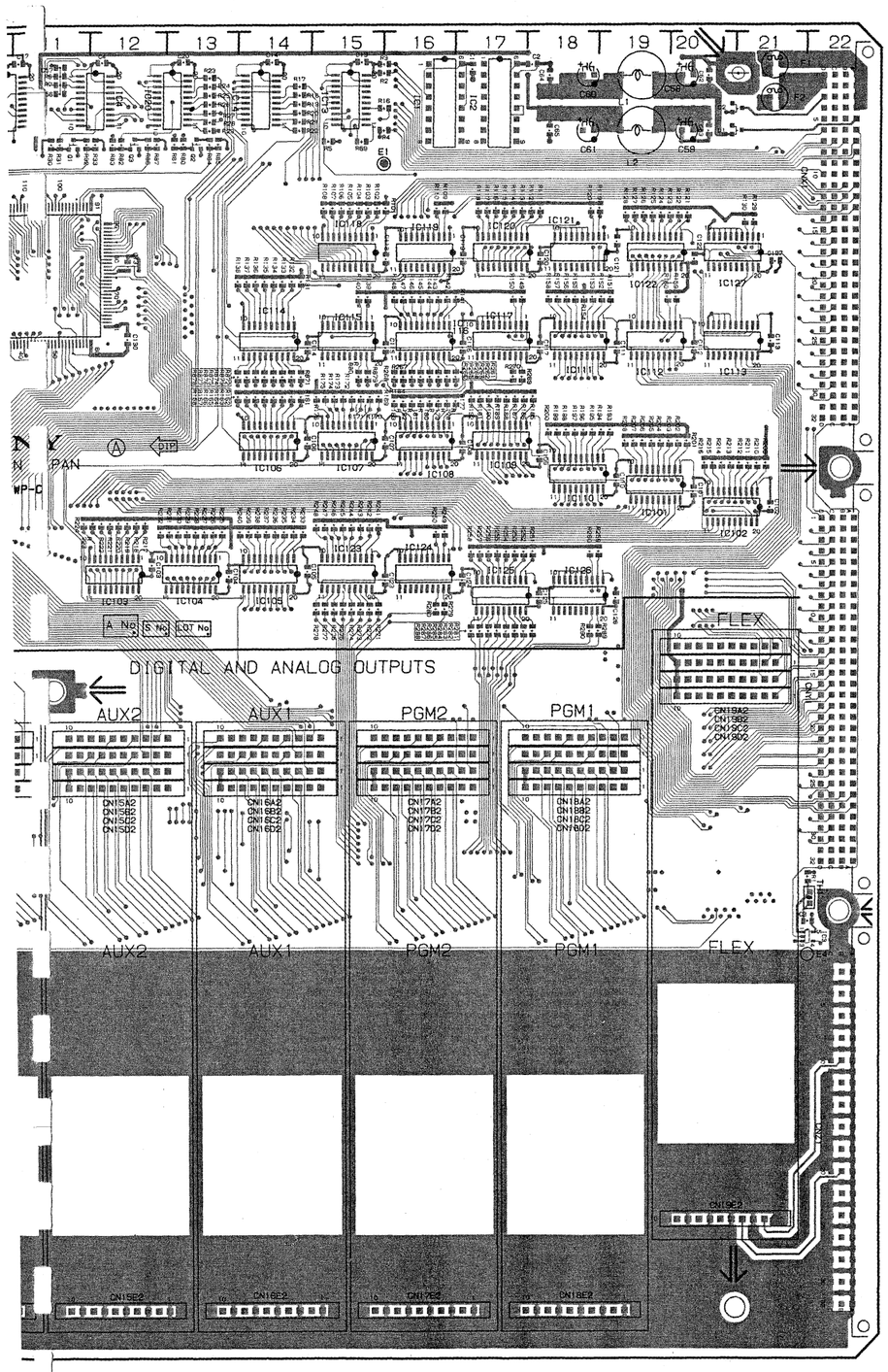

OUT-3 -A SIDE-

1-646-029-11

DVS-6000/6000C

OUT-3;Output Processor Board

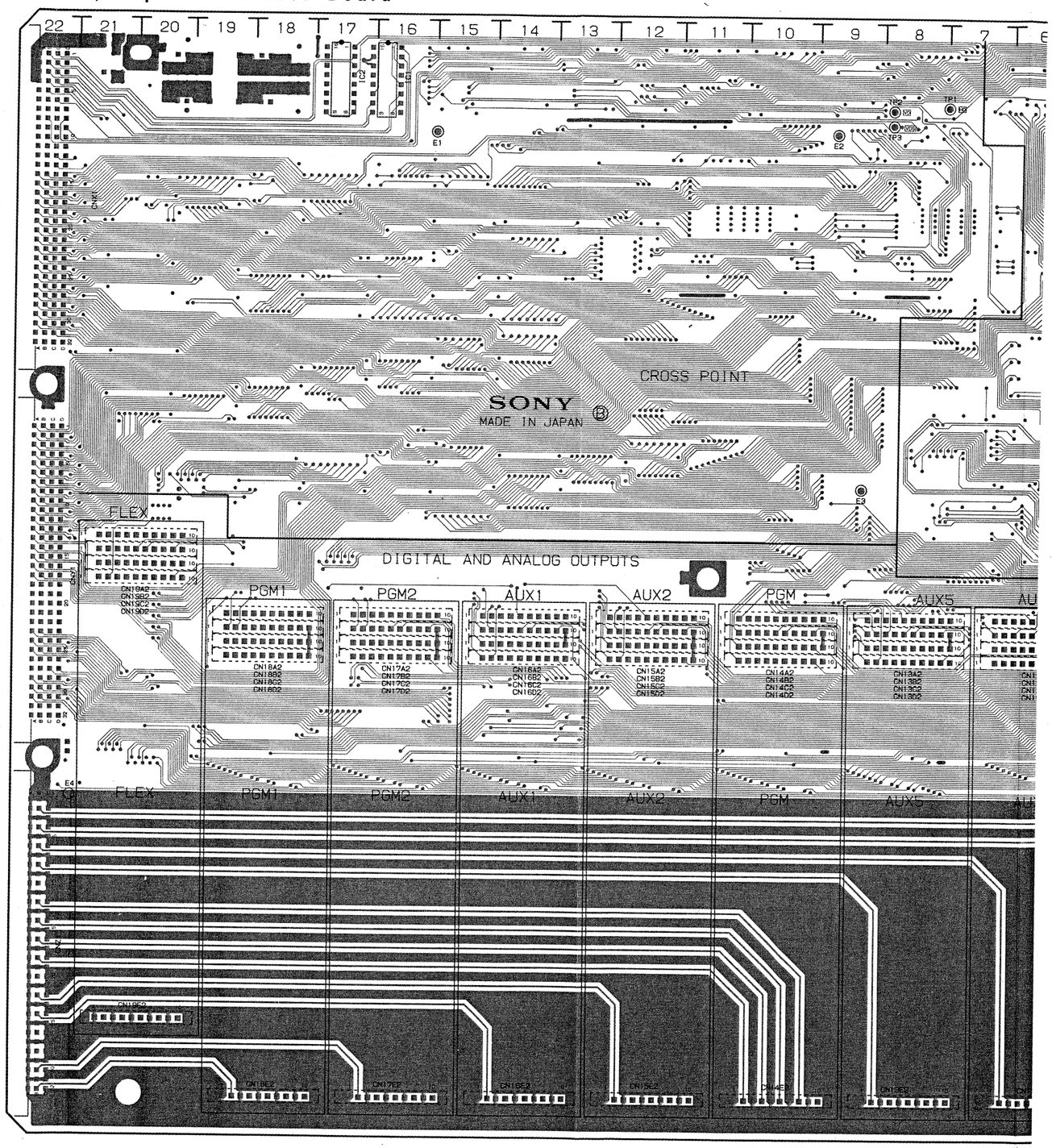

OUT-3;Output Processor Board

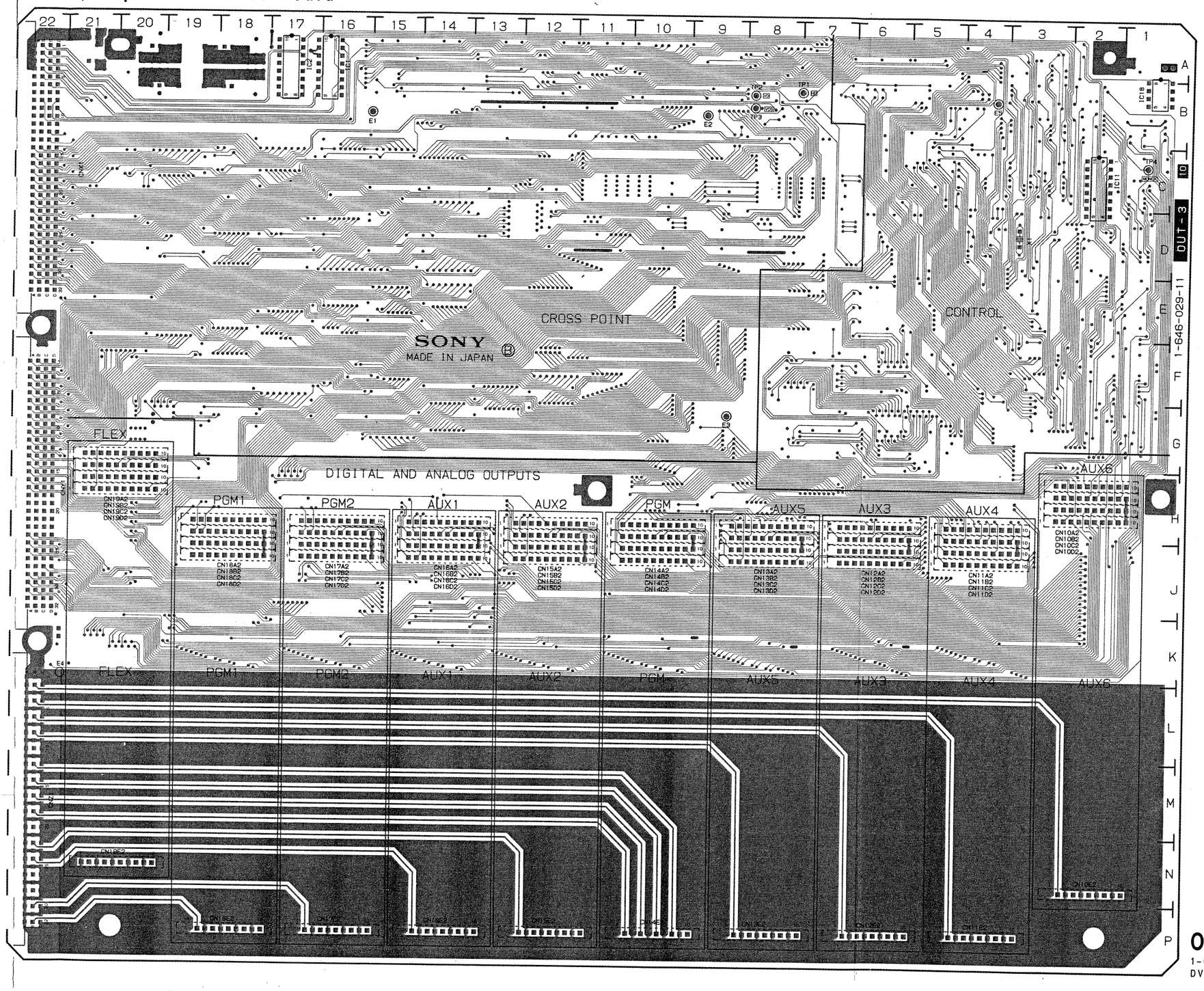

OUT-3 -B SIDE-
1-646-029-11
DVS-6000/6000C

OUT-3(1-646-029-11)

CNA10	H-2	IC19	C-3
CNA11	J-4	IC20	A-12
CNA12	J-6	IC22	B-1
CNA13	J-8	IC23	A-3
CNA14	J-10	IC24	C-6
CNA15	J-12	IC25	C-5
CNA16	J-14	IC26	F-1
CNA17	J-16	IC27	E-1
CNA18	J-18	IC28	E-1
CNA19	H-20	IC29	E-6
		IC30	E-5
CNB10	H-2	IC32	C-1
CNB11	J-4	IC33	D-1
CNB12	J-6	IC34	E-2
CNB13	J-8	IC35	D-2
CNB14	J-10	IC36	B-8
CNB15	J-12	IC37	G-5
CNB16	J-14	IC38	B-4
CNB17	J-16	IC39	G-7
CNB18	J-18	IC40	H-5
CNB19	H-20	IC41	H-7
		IC42	E-3
CNC10	J-2	IC43	D-4
CNC11	J-4	IC44	D-4
CNC12	J-6	IC46	A-4
CNC13	J-8	IC47	A-5
CNC14	J-10	IC101	F-19
CNC15	J-12	IC102	F-20
CNC16	J-14	IC103	G-12
CNC17	J-16	IC104	G-13
CNC18	J-18	IC105	G-14
CNC19	H-20	IC106	E-14
		IC107	E-15
CND10	J-2	IC108	F-16
CND11	J-4	IC109	E-17
CND12	J-6	IC110	F-18
CND13	J-8	IC111	D-18
CND14	J-10	IC112	D-19
CND15	J-12	IC113	D-20
CND16	J-14	IC114	D-14
CND17	J-16	IC115	D-15
CND18	J-18	IC116	D-17
CND19	H-2	IC117	D-17
		IC118	C-15
CNE10	N-2	IC119	C-16
CNE11	P-4	IC120	C-17
CNE12	P-6	IC121	C-18
CNE13	P-8	IC122	C-19
CNE14	P-10	IC123	F-15
CNE15	P-12	IC124	F-16
CNE16	P-14	IC125	G-17
CNE17	P-16	IC126	G-18
CNE18	P-18	IC127	C-20
CNE19	N-20	IC128	C-10
		IC129	D-9
CNX1	B-21	IC130	A-9
CNY1	H-22	Q1	B-11
		Q2	B-13
CNZ1	M-22	Q3	B-12
D1	B-20	TH1	K-22
D2	B-20		
		TP1	B-7
E1	B-15	TP2	B-8
E2	B-9	TP3	B-8
E3	G-9	TP4	C-1
E4	L-22		
E5	B-4	X1	D-3
F1	A-21		
F2	A-21		
IC1	A-16		
IC2	A-17		
IC3	K-22		
IC4	A-12		
IC5	C-5		
IC6	F-2		
IC7	E-2		
IC9	C-4		
IC10	B-2		
IC11	C-2		
IC13	A-15		
IC14	A-13		
IC15	D-2		
IC16	D-3		
IC17	A-10		
IC18	A-1		

SD-31;Digital Edit PVW/REF Output Board

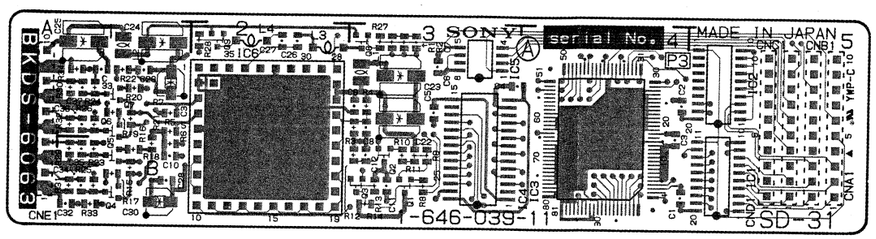

SD-31 -A SIDE-
1-646-039-11
BKDS-6063

SD-31(1-646-039-11)

CNA1	*A-5
CNB1	*A-5
CNC1	*A-5
CND1	*A-5
CNE1	*B-1
IC1	B-5
IC2	A-5
IC3	B-4
IC4	B-4
IC5	A-3
IC6	A-2
Q1	B-3
Q2	B-3
Q3	B-3
Q4	B-1
Q5	B-1
Q6	A-1
Q7	A-1
Q8	A-3
Q9	A-2

*;B SIDE

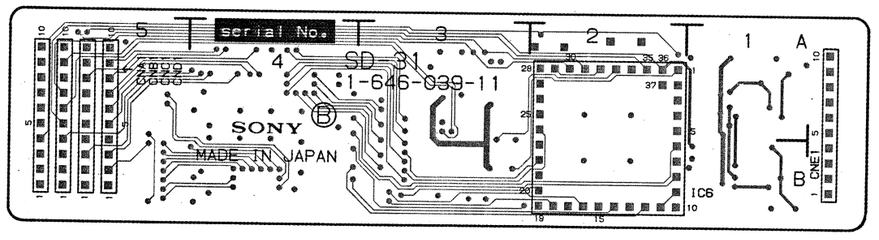

SD-31 -B SIDE-
1-646-039-11
BKDS-6063

SD-31;Digital Edit PVW/REF Output Board

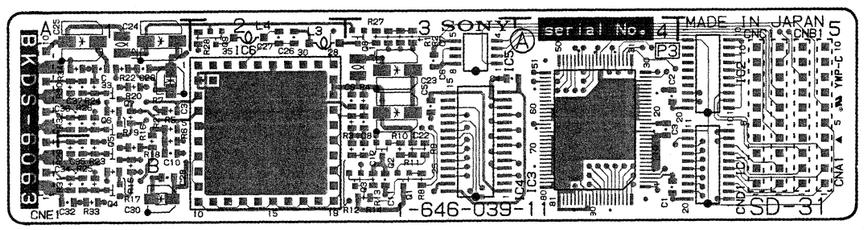

SD-31 -A SIDE-
1-646-039-11
BKDS-6063

SD-31(1-646-039-11)	
CNA1	*A-5
CNB1	*A-5
CNC1	*A-5
CND1	*A-5
CNE1	*B-1
IC1	B-5
IC2	A-5
IC3	B-4
IC4	B-4
IC5	A-3
IC6	A-2
Q1	B-3
Q2	B-3
Q3	B-3
Q4	B-1
Q5	B-1
Q6	A-1
Q7	A-1
Q8	A-3
Q9	A-2

*;B SIDE

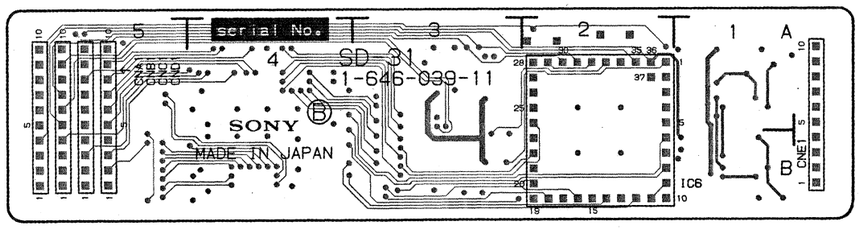

SD-31 -B SIDE-
1-646-039-11
BKDS-6063

(DVS-6000ONLY)
DA-73;Analog Output Board

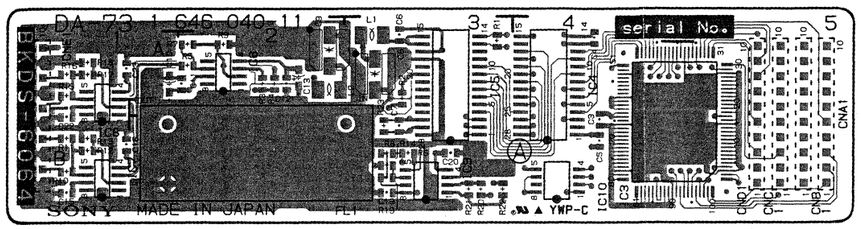

DA-73 -A SIDE-
1-646-040-11
BKDS-6064

DA-73(1-646-040-11)	
CNA1	*B-5
CNB1	*B-5
CNC1	*B-5
CND1	*B-5
CNE1	*B-1
FL1	B-2
IC3	B-4
IC4	A-4
IC5	A-3
IC6	A-2
IC7	B-1
IC8	B-1
IC9	B-3
IC10	B-4

*;B SIDE

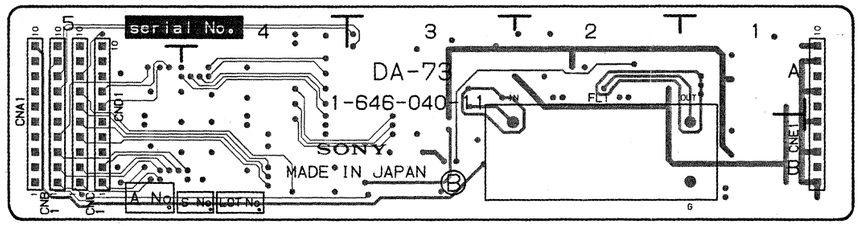

DA-73 -B SIDE-
1-646-040-11
BKDS-6064

MAT-4;Matte Generator Board

MAT-4(1-646-030-11)

CNA2	C-1
CNB2	D-1
CND2	G-1
CNX1	A-8
CNY1	E-8
CNZ1	G-8
D1	A-8
E1	A-1
E2	A-7
E3	E-2
E4	G-1
E5	G-8
F1	A-8
IC2	A-7
IC3	A-8
IC4	A-4
IC5	A-3
IC6	B-6
IC7	D-3
IC8	C-3
IC9	D-5
IC10	C-5
IC11	A-2
IC13	C-4
IC14	C-1
IC15	B-8
IC16	D-8
IC17	C-8
IC18	D-4
IC19	D-4
IC20	F-8
IC21	A-5
IC22	A-6
IC23	C-4
IC24	F-3
IC25	G-3
IC26	B-5
IC27	E-3
IC201	G-4
IC202	G-8
IC203	F-4
IC204	F-8
IC205	E-4
IC206	E-8
TH1	F-8

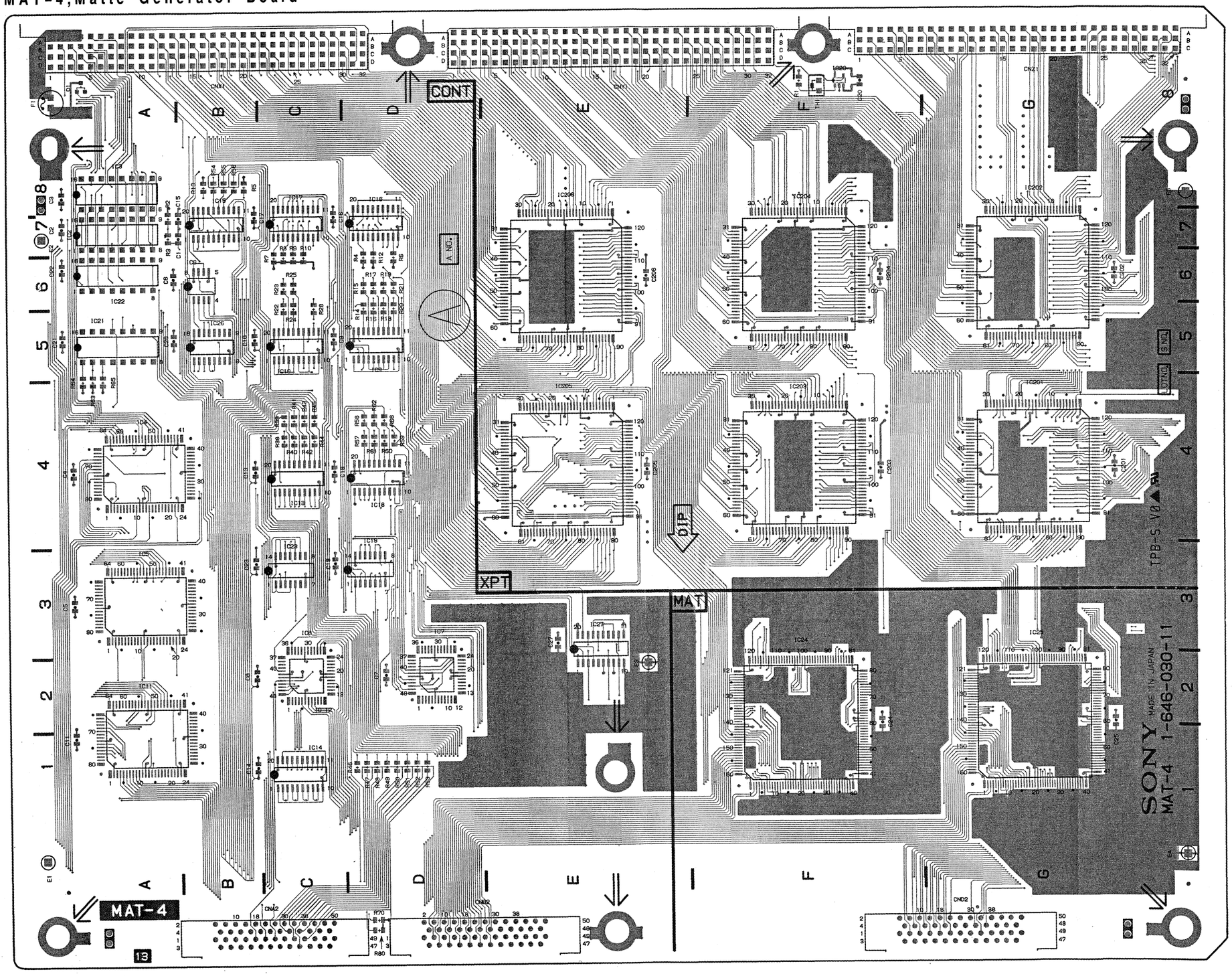

MAT-4 -A SIDE-
1-646-030-11
DVS-6000/6000C

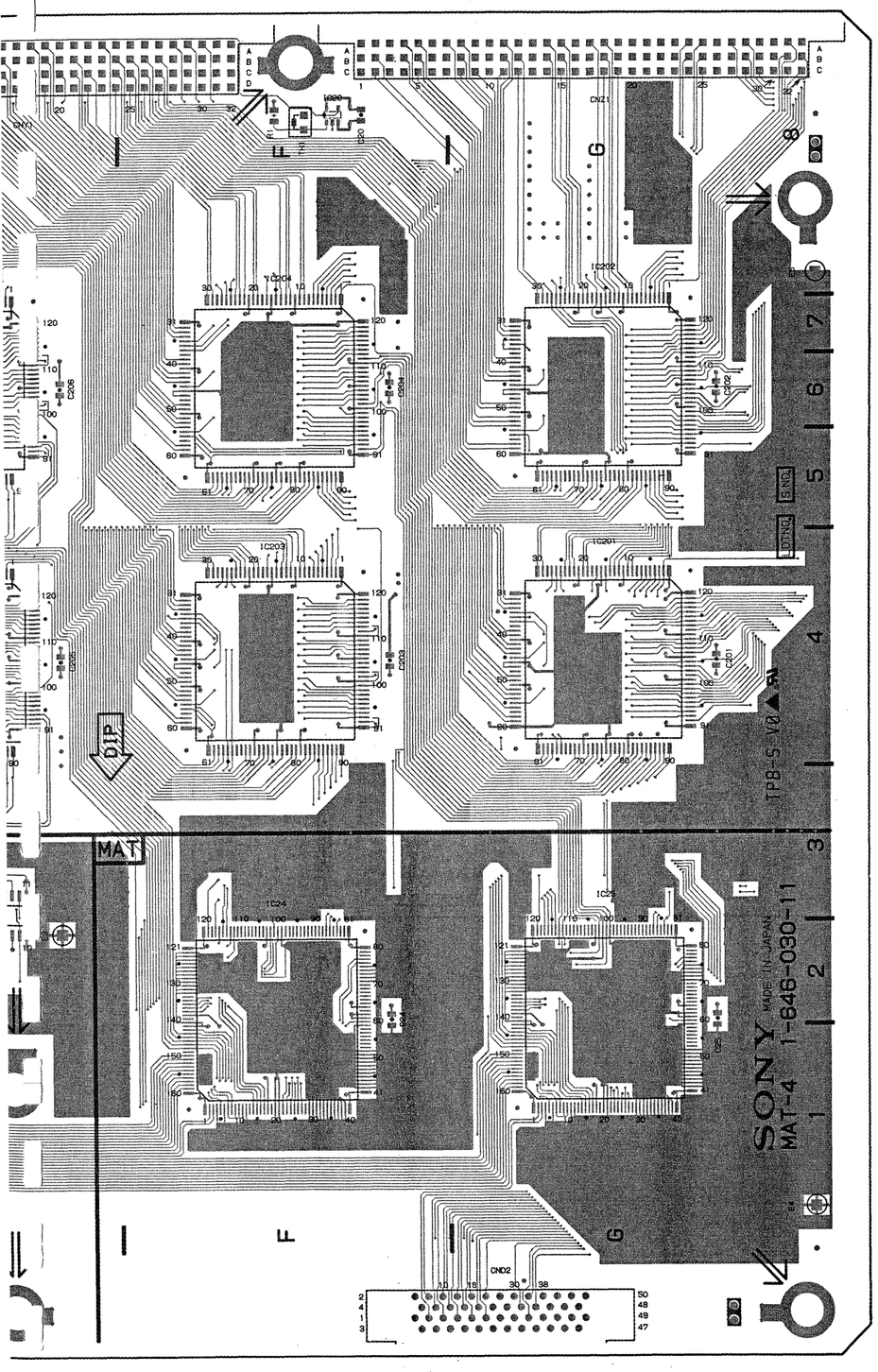

MAT-4 -A SIDE-
1-646-030-11
DVS-6000/6000C

MAT-4;Matte Generator Board

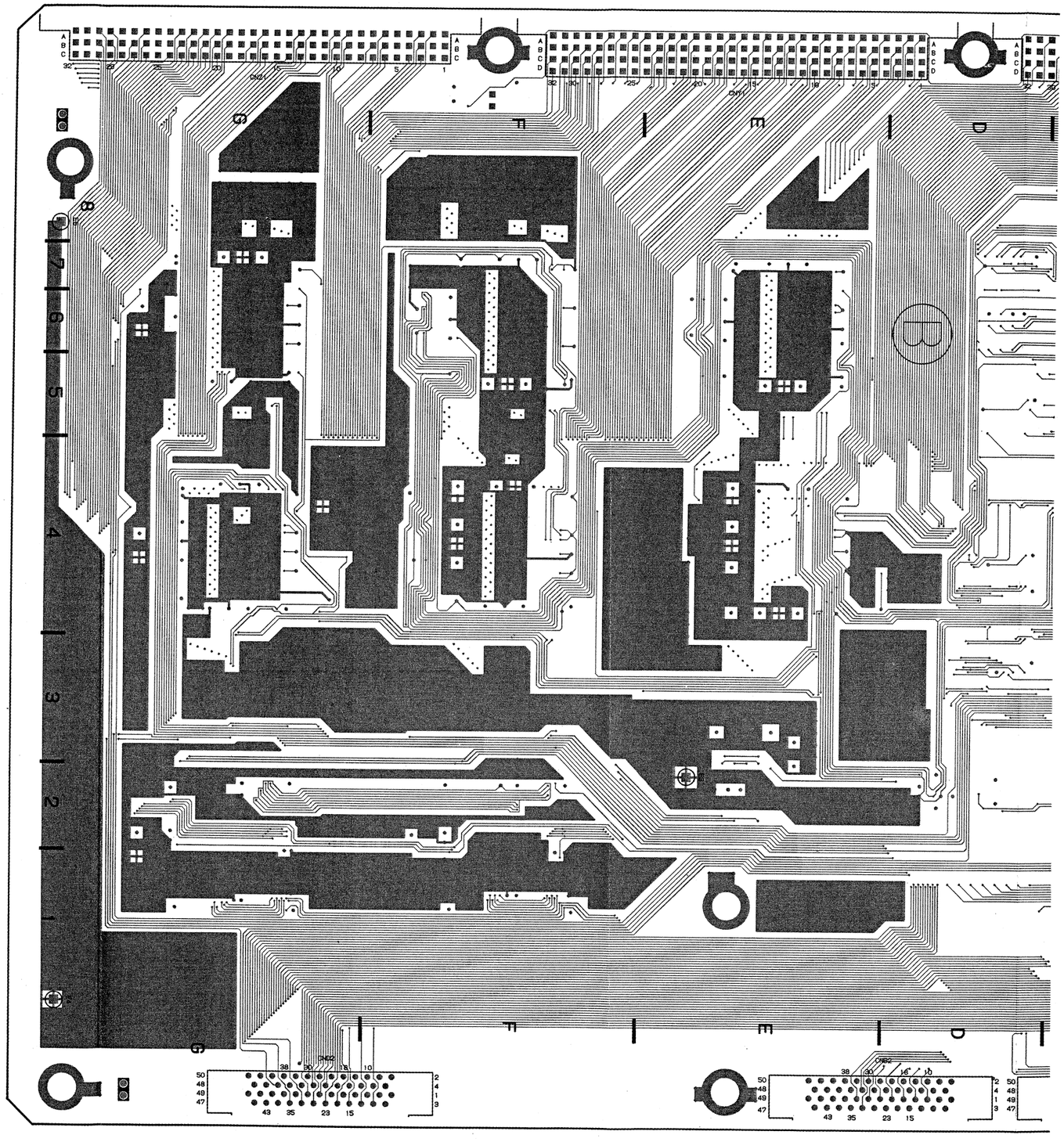

MAT-4;Matte Generator Board

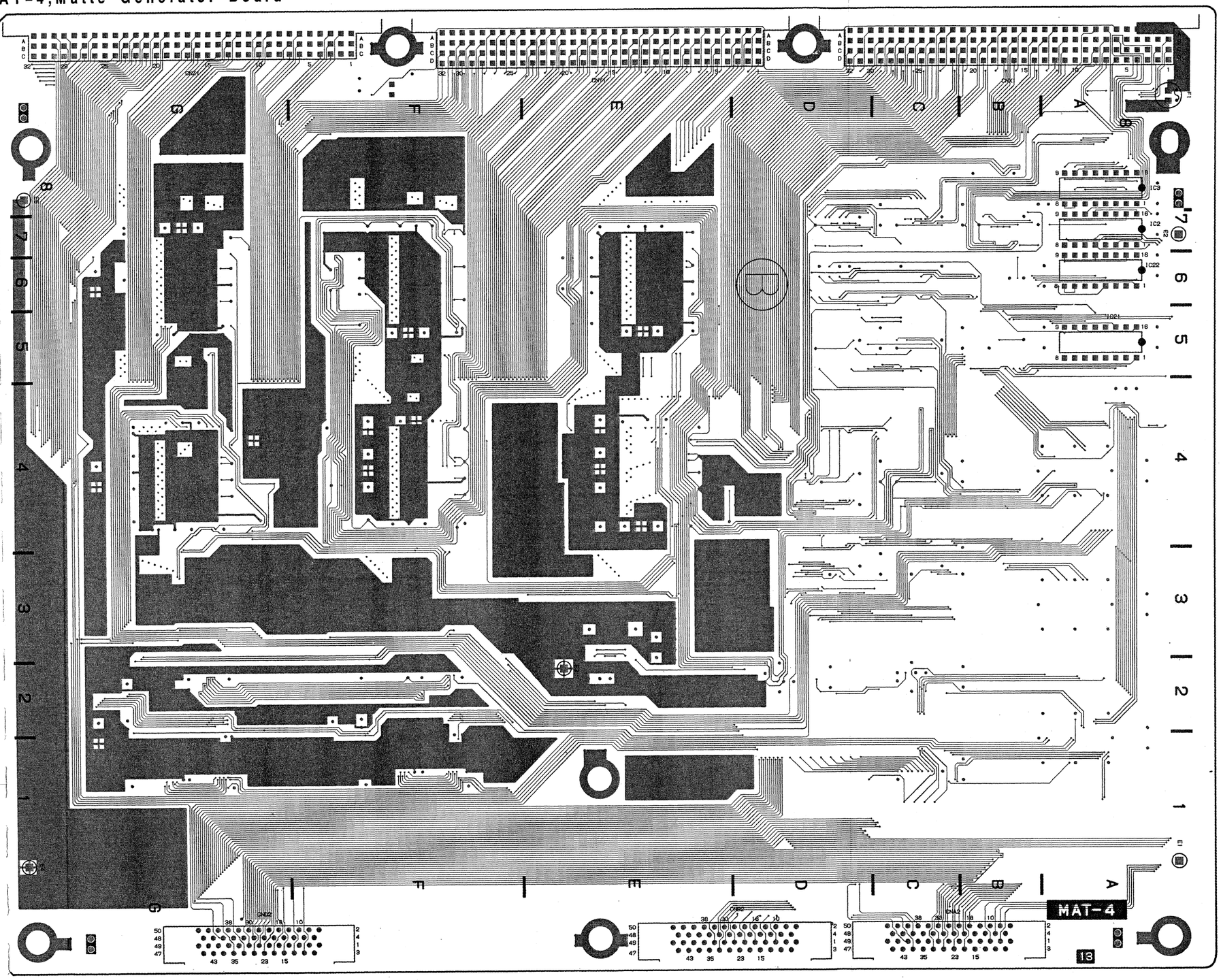

MAT-4 -B SIDE-
1-646-030-11
DVS-6000/6000C

MAT-4(1-646-030-11)

CNA2	C-1
CNB2	D-1
CND2	G-1
CNX1	A-8
CNY1	E-8
CNZ1	G-8
D1	A-8
E1	A-1
E2	A-7
E3	E-2
E4	G-1
E5	G-8
F1	A-8
IC2	A-7
IC3	A-8
IC4	A-4
IC5	A-3
IC6	B-6
IC7	D-3
IC8	C-3
IC9	D-5
IC10	C-5
IC11	A-2
IC13	C-4
IC14	C-1
IC15	B-8
IC16	D-8
IC17	C-8
IC18	D-4
IC19	D-4
IC20	F-8
IC21	A-5
IC22	A-6
IC23	C-4
IC24	F-3
IC25	G-3
IC26	B-5
IC27	E-3
IC201	G-4
IC202	G-8
IC203	F-4
IC204	F-8
IC205	E-4
IC206	E-8
TH1	F-8

MT-90;BKGD Color MIX Generator Board

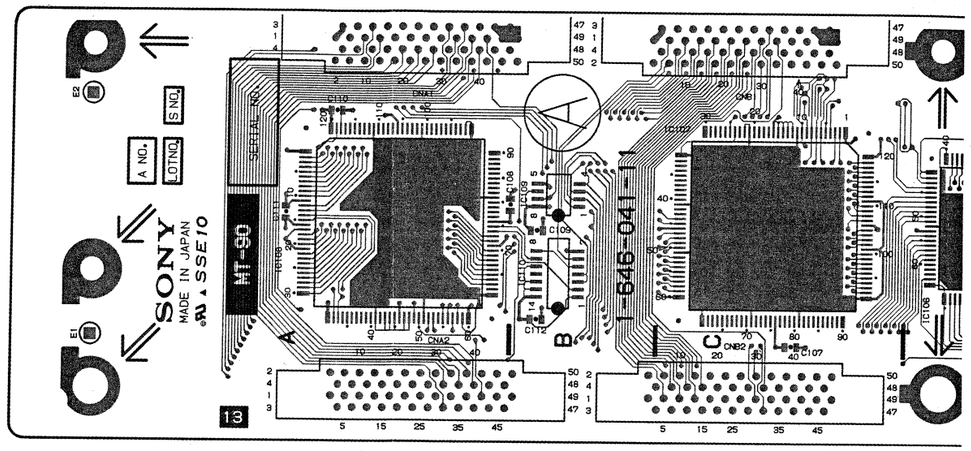

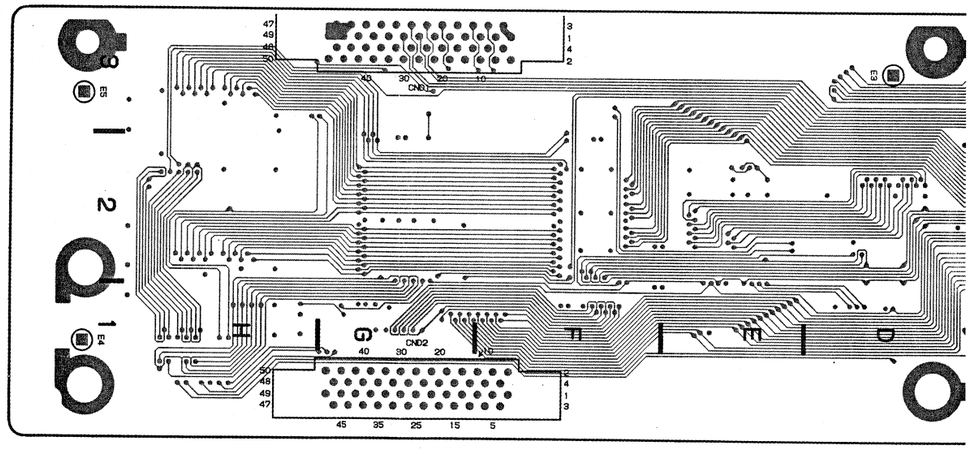

MT-90;BKGD Color MIX Generator Board

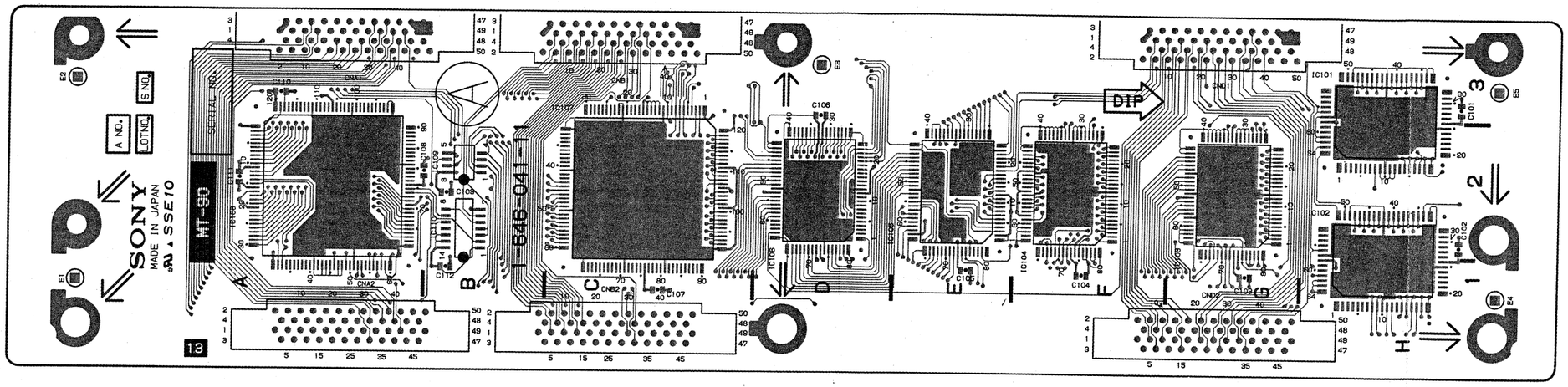

MT-90 -A SIDE-
1-646-041-11
BKDS-6070

MT-90(1-646-041-11)

CNA1	A-3
CNA2	A-1
CNB1	C-3
CNB2	C-1
CND1	G-3
CND2	G-1
E1	A-1
E2	A-3
E3	D-3
E4	H-1
E5	H-3
IC101	H-3
IC102	H-2
IC103	G-1
IC104	F-1
IC105	E-2
IC106	D-1
IC107	C-2
IC108	A-2
IC109	B-2
IC110	B-2

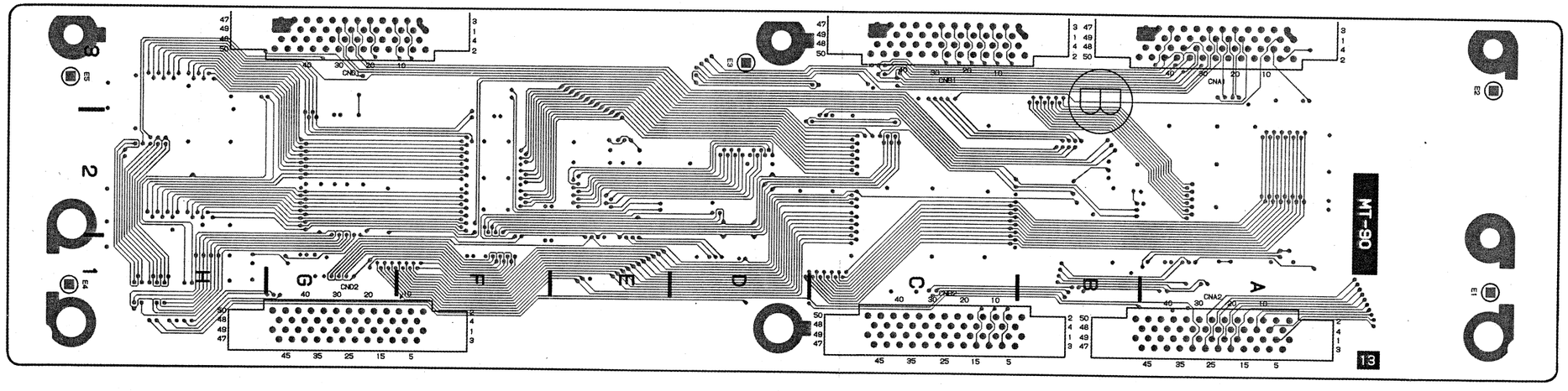

MT-90 -B SIDE-
1-646-041-11
BKDS-6070

XPT-3;Digital Input Board

XPT-3(1-641-009-11)

CNX1	C-12	IC101	D-2	Q102	E-2
		IC102	D-3	Q104	B-2
CNY1	M-12	IC104	C-2	Q201	A-5
		IC105	D-3	Q202	E-5
CNZ1	V-12	IC106	B-3	Q204	C-5
		IC107	A-3	Q301	E-2
CN101	B-2	IC109	A-2	Q302	K-2
CN201	B-4	IC110	D-2	Q304	G-2
CN301	G-2	IC201	E-5	Q401	F-5
CN401	G-4	IC202	E-6	Q402	K-5
CN501	L-2	IC204	D-6	Q404	J-5
CN601	N-4	IC205	E-6	Q501	K-2
CN701	R-2	IC206	C-6	Q502	Q-2
CN801	S-4	IC207	B-6	Q504	M-2
		IC209	A-5	Q601	L-5
D12	B-12	IC210	E-6	Q602	R-5
D13	B-12	IC301	J-2	Q604	N-5
D101	D-2	IC302	K-3	Q701	Q-2
D102	C-1	IC304	H-2	Q702	V-2
D201	D-5	IC305	H-3	Q704	S-2
D202	D-4	IC306	G-3	Q801	R-2
D301	J-2	IC307	F-3	Q802	W-5
D302	H-1	IC309	E-2	Q804	U-5
D401	K-5	IC310	J-2		
D402	J-5	IC401	K-5	TH10	R-12
D501	P-1	IC402	K-6		
D502	N-1	IC404	J-6	TP101	G-1
D601	Q-5	IC405	K-6	TP201	H-1
D602	Q-5	IC406	H-6	TP301	H-1
D701	T-2	IC407	G-6	TP401	J-1
D702	T-1	IC409	F-5	TP501	J-1
D801	V-5	IC410	K-6	TP601	K-1
D802	U-5	IC501	P-2	TP701	K-1
		IC502	Q-3	TP801	K-1
E10	A-10	IC504	N-2		
E20	K-1	IC505	N-3		
E101	E-2	IC506	M-3		
E201	E-5	IC507	L-3		
E301	K-2	IC509	K-2		
E401	K-5	IC510	P-2		
E501	Q-2	IC601	Q-5		
E601	Q-5	IC602	Q-6		
E701	V-2	IC604	P-6		
E801	V-5	IC605	Q-6		
E901	Q-7	IC606	N-6		
		IC607	L-6		
FB902	U-7	IC609	L-5		
FB903	Q-9	IC610	Q-6		
FB904	P-7	IC701	U-2		
FB905	K-11	IC702	V-3		
FB906	H-7	IC704	T-2		
FB907	E-12	IC705	T-3		
		IC706	S-3		
F1	A-12	IC707	R-3		
F2	A-12	IC709	Q-2		
		IC710	U-2		
IC10	B-10	IC801	V-5		
IC11	A-10	IC802	W-6		
IC12	A-8	IC804	U-6		
IC20	C-11	IC805	V-6		
IC21	D-10	IC806	T-6		
IC22	C-10	IC807	S-6		
IC23	D-11	IC809	R-5		
IC24	B-4	IC810	V-6		
IC25	D-4	IC902	U-8		
IC26	E-8	IC903	U-10		
IC27	R-12	IC904	P-7		
IC31	F-4	IC905	P-10		
IC32	A-9	IC906	J-7		
IC33	G-4	IC907	J-10		
IC35	J-4				
IC36	B-9	Q11	E-4		
IC37	E-7	Q101	A-2		

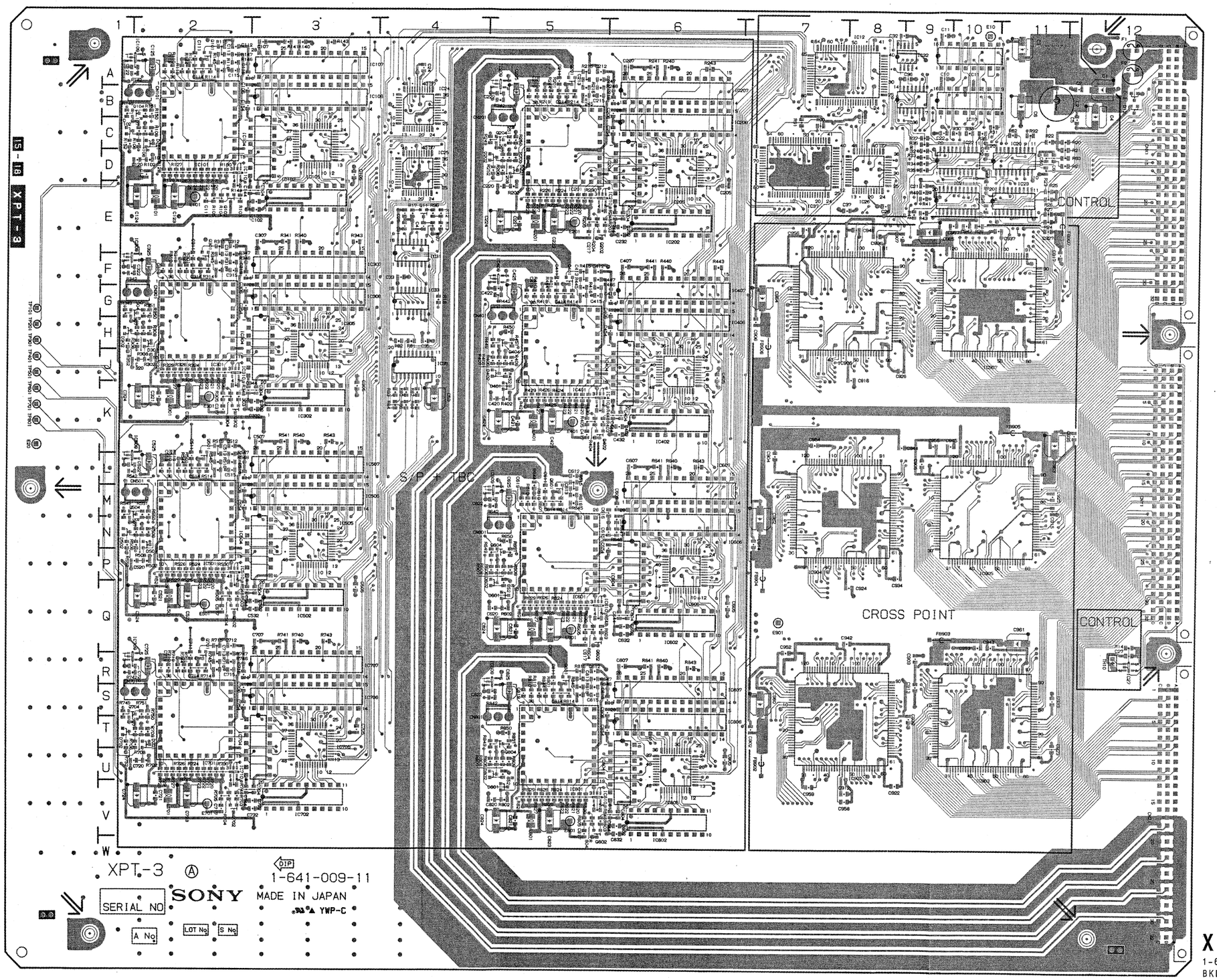

XPT-3 -A
1-641-009-11
BKDS-8022

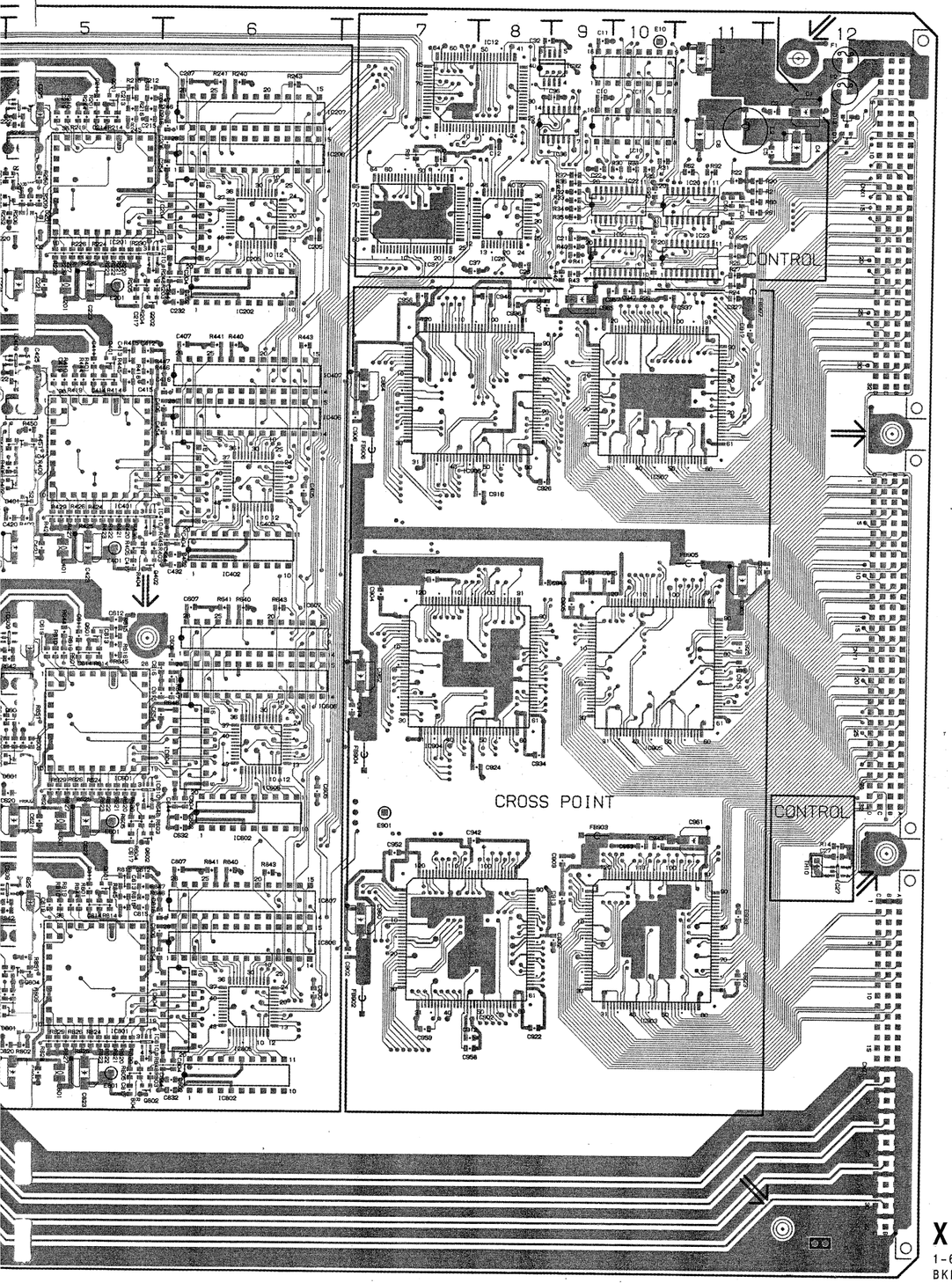

XPT-3 -A SIDE-
1-641-009-11
BKDS-8022

XPT-3;Digital Input Board

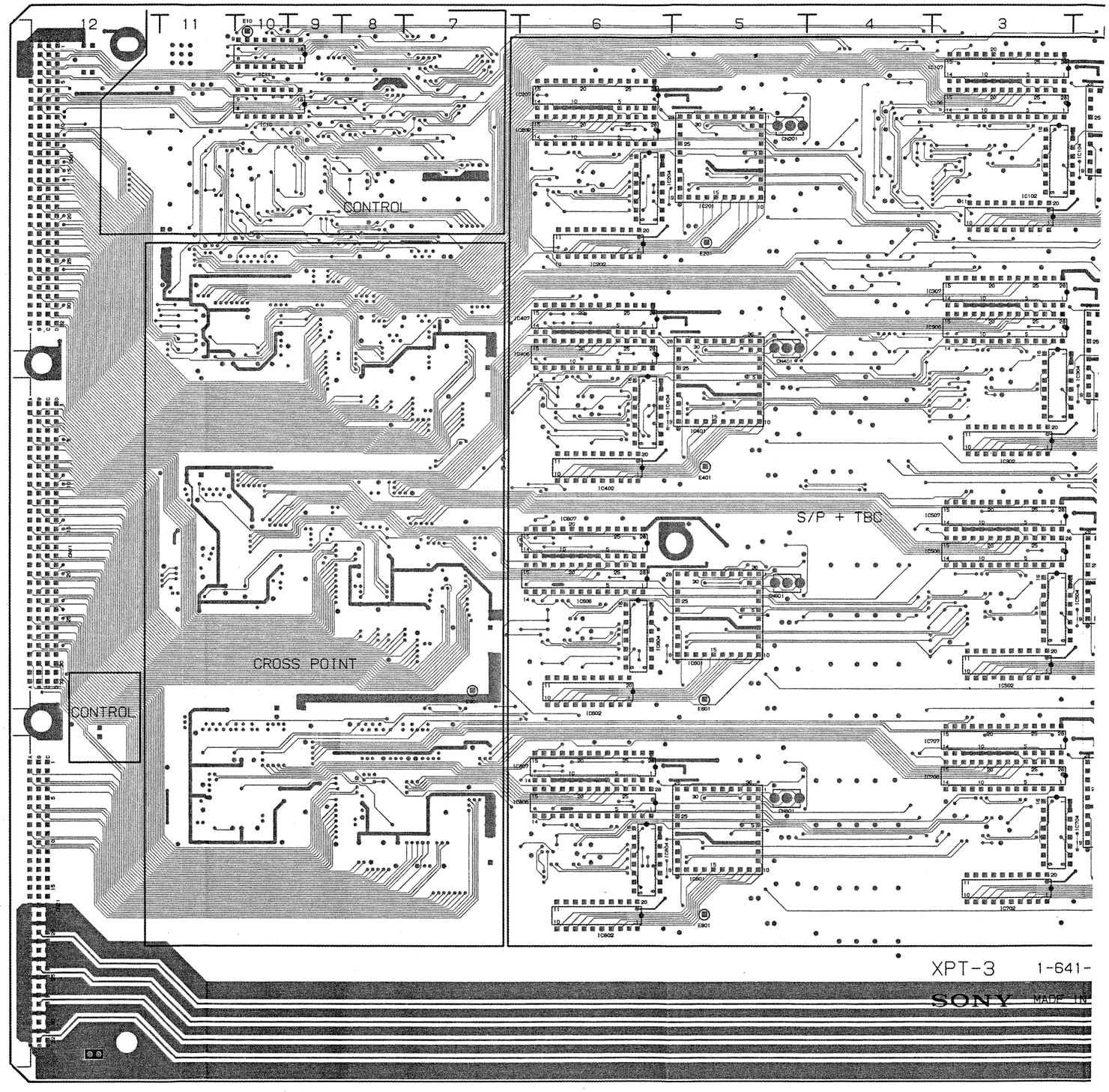

t Board

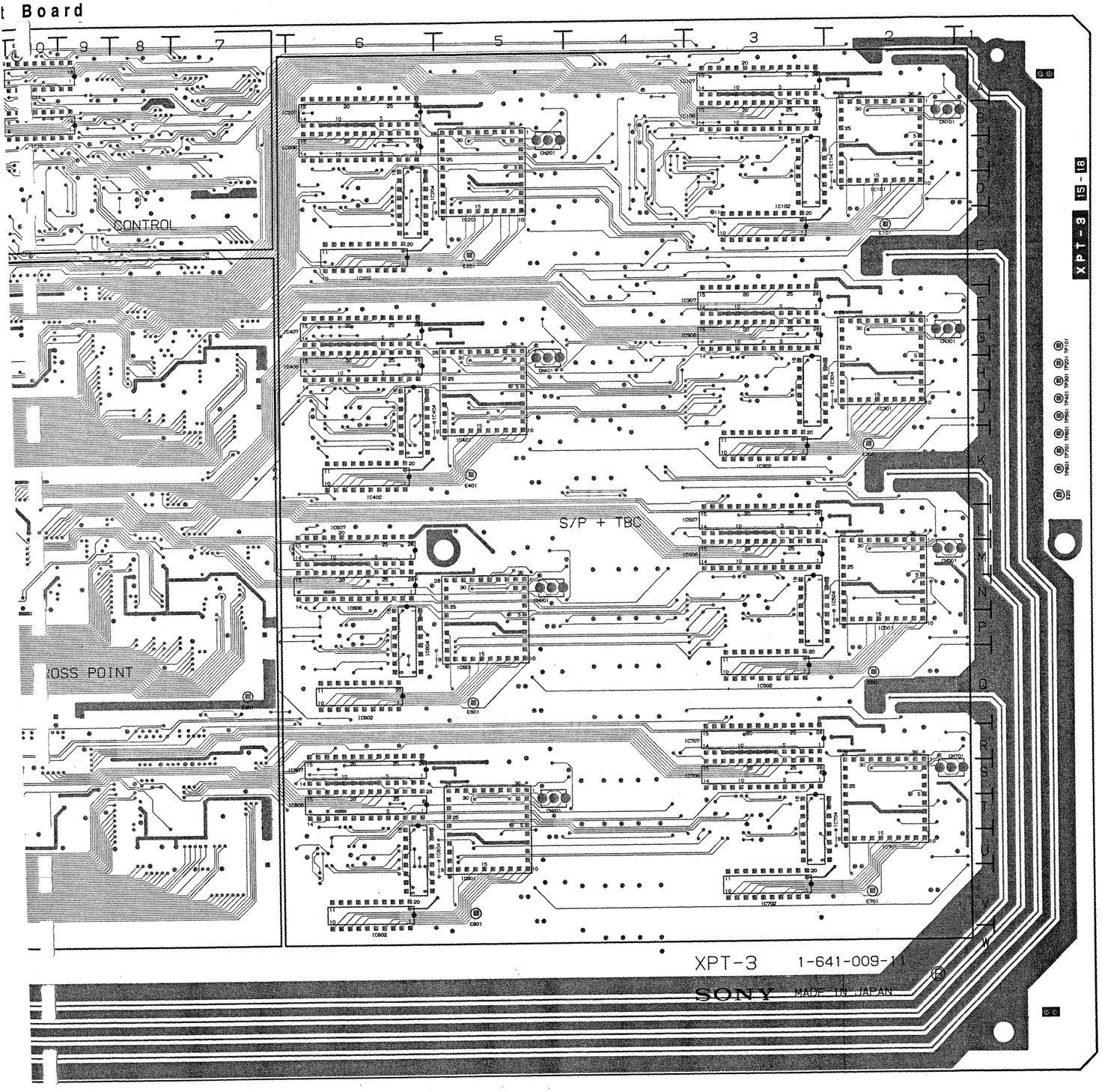

XPT-3 -B SIDE-
1-641-009-11
BKDS-8022

XPT-3(1-641-009-11)

CNX1	C-12	IC101	D-2	Q102	E-2
		IC102	D-3	Q104	B-2
CNY1	M-12	IC104	C-2	Q201	A-5
		IC105	D-3	Q202	E-5
CNZ1	V-12	IC106	B-3	Q204	C-5
		IC107	A-3	Q301	E-2
CN101	B-2	IC109	A-2	Q302	K-2
CN201	B-4	IC110	D-2	Q304	G-2
CN301	G-2	IC201	E-5	Q401	F-5
CN401	G-4	IC202	E-6	Q402	K-5
CN501	L-2	IC204	D-6	Q404	J-5
CN601	N-4	IC205	E-6	Q501	K-2
CN701	R-2	IC206	C-6	Q502	Q-2
CN801	S-4	IC207	B-6	Q504	M-2
		IC209	A-5	Q601	L-5
D12	B-12	IC210	E-6	Q602	R-5
D13	B-12	IC301	J-2	Q604	N-5
D101	D-2	IC302	K-3	Q701	Q-2
D102	C-1	IC304	H-2	Q702	V-2
D201	D-5	IC305	H-3	Q704	S-2
D202	D-4	IC306	G-3	Q801	R-2
D301	J-2	IC307	F-3	Q802	W-5
D302	H-1	IC309	E-2	Q804	U-5
D401	K-5	IC310	J-2		
D402	J-5	IC401	K-5	TH10	R-12
D501	P-1	IC402	K-6		
D502	N-1	IC404	J-6	TP101	G-1
D601	Q-5	IC405	K-6	TP201	H-1
D602	Q-5	IC406	H-6	TP301	H-1
D701	T-2	IC407	G-6	TP401	J-1
D702	T-1	IC409	F-5	TP501	J-1
D801	V-5	IC410	K-6	TP601	K-1
D802	U-5	IC501	P-2	TP701	K-1
		IC502	Q-3	TP801	K-1
E10	A-10	IC504	N-2		
E20	K-1	IC505	N-3		
E101	E-2	IC506	M-3		
E201	E-5	IC507	L-3		
E301	K-2	IC509	K-2		
E401	K-5	IC510	P-2		
E501	Q-2	IC601	Q-5		
E601	Q-5	IC602	Q-6		
E701	V-2	IC604	P-6		
E801	V-5	IC605	Q-6		
E901	Q-7	IC606	N-6		
		IC607	L-6		
FB902	U-7	IC609	L-5		
FB903	Q-9	IC610	Q-6		
FB904	P-7	IC701	U-2		
FB905	K-11	IC702	V-3		
FB906	H-7	IC704	T-2		
FB907	E-12	IC705	T-3		
		IC706	S-3		
F1	A-12	IC707	R-3		
F2	A-12	IC709	Q-2		
		IC710	U-2		
IC10	B-10	IC801	V-5		
IC11	A-10	IC802	W-6		
IC12	A-8	IC804	U-6		
IC20	C-11	IC805	V-6		
IC21	D-10	IC806	T-6		
IC22	C-10	IC807	S-6		
IC23	D-11	IC809	R-5		
IC24	B-4	IC810	V-6		
IC25	D-4	IC902	U-8		
IC26	E-8	IC903	U-10		
IC27	R-12	IC904	P-7		
IC31	F-4	IC905	P-10		
IC32	A-9	IC906	J-7		
IC33	G-4	IC907	J-10		
IC35	J-4				
IC36	B-9	Q11	E-4		
IC37	E-7	Q101	A-2		

CN-311;Output Connector Board

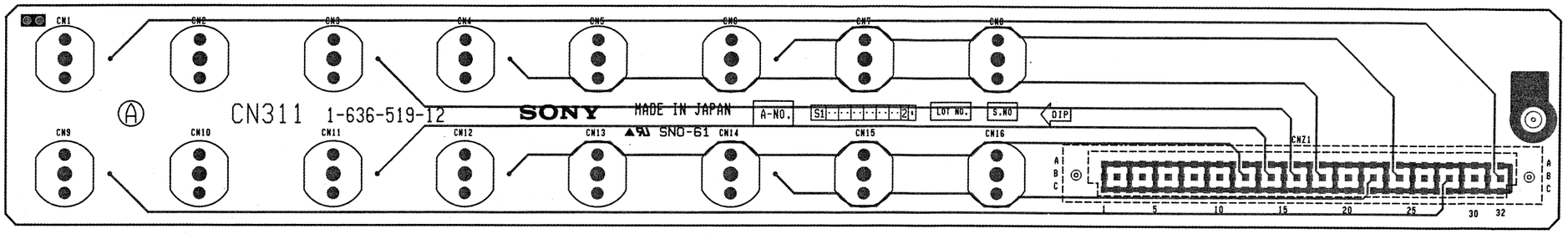

CN-311 -A SIDE-
1-636-519-12
DVS-6000/6000C

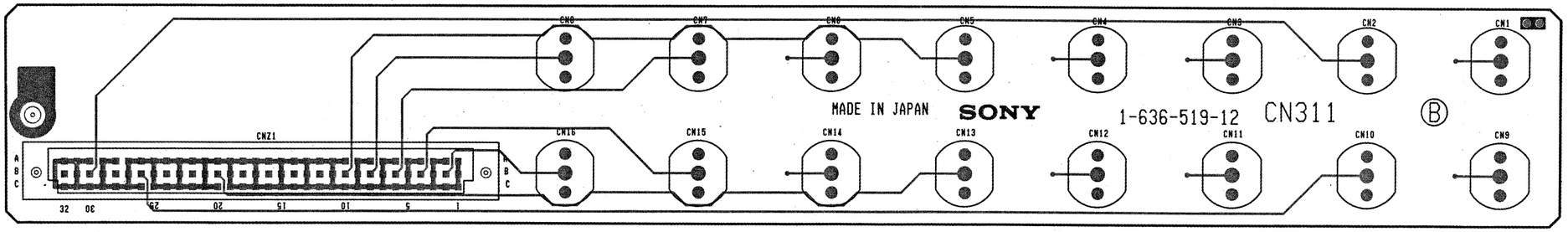

CN-311 -B SIDE-
1-636-519-12
DVS-6000/6000C

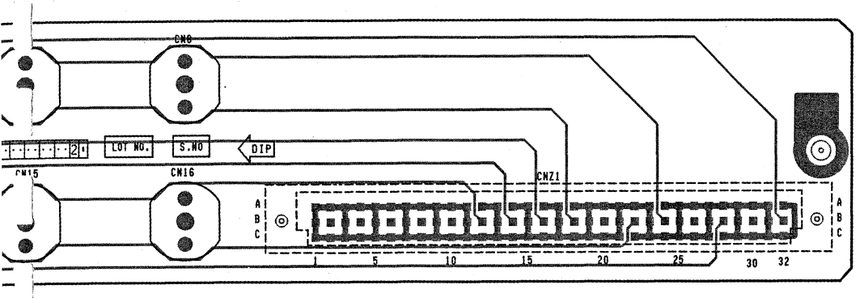

CN-311 -A SIDE-
1-636-519-12
DVS-6000/6000C

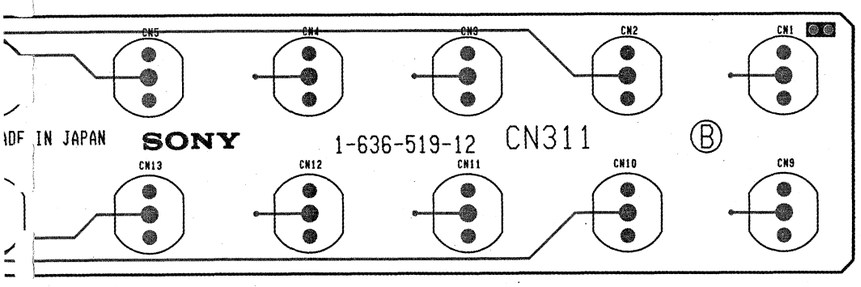

CN-311 -B SIDE-
1-636-519-12
DVS-6000/6000C

(DVS-6000 ONLY)
CN-503;Chroma Key Input Connector

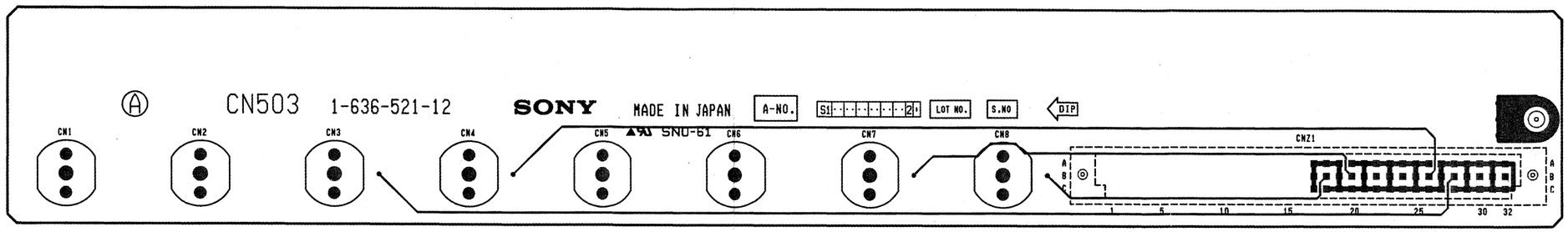

CN-503 -A SIDE-
1-636-512-12
DVS-6000

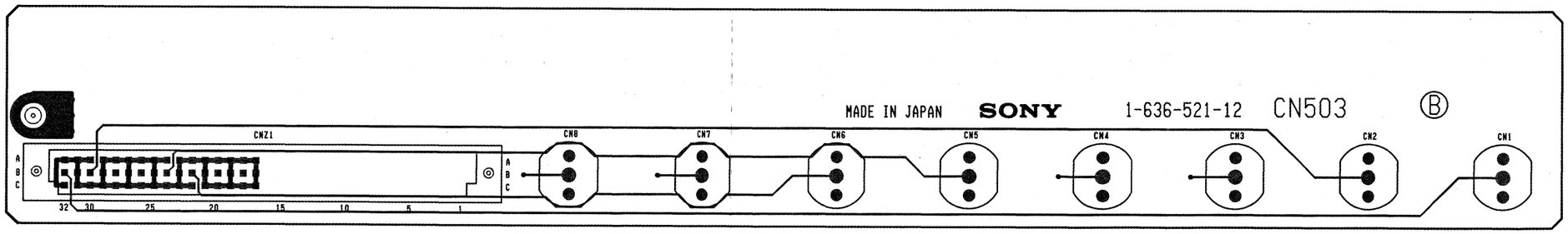

CN-503 -B SIDE-
1-636-512-12
DVS-6000

4-39

CN-312;Primary Input Connector Board

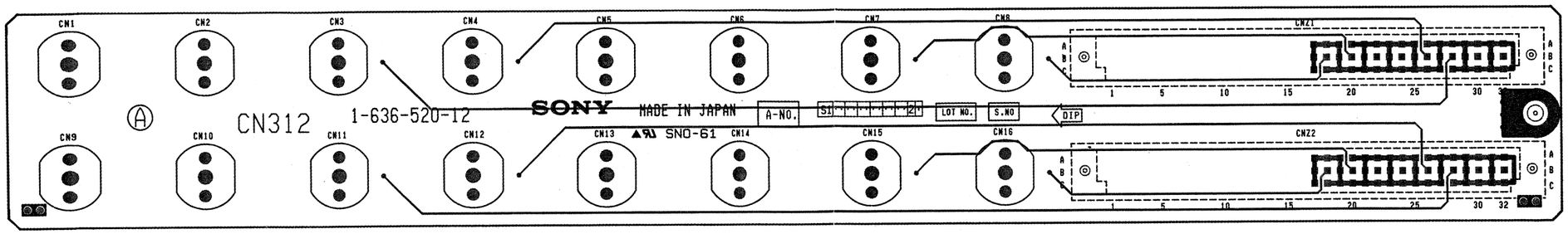

CN-312 -A SIDE-
1-636-520-12
DVS-6000/6000C

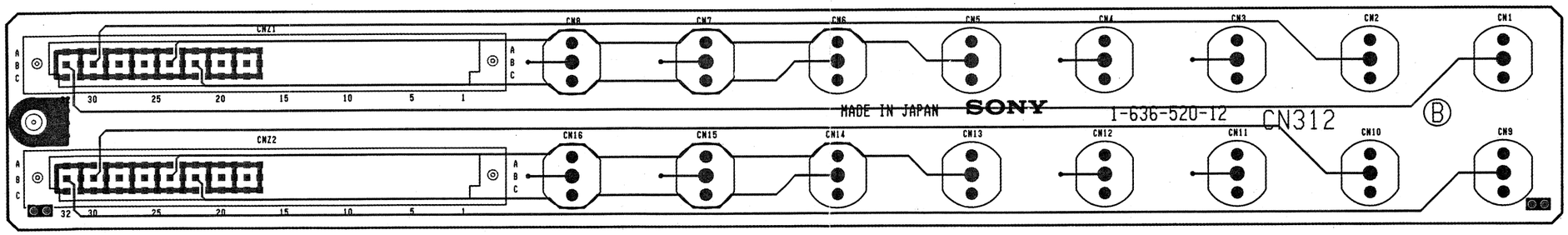

CN-312 -B SIDE-
1-636-520-12
DVS-6000/6000C

4-40

CN-843;Control Connector Board

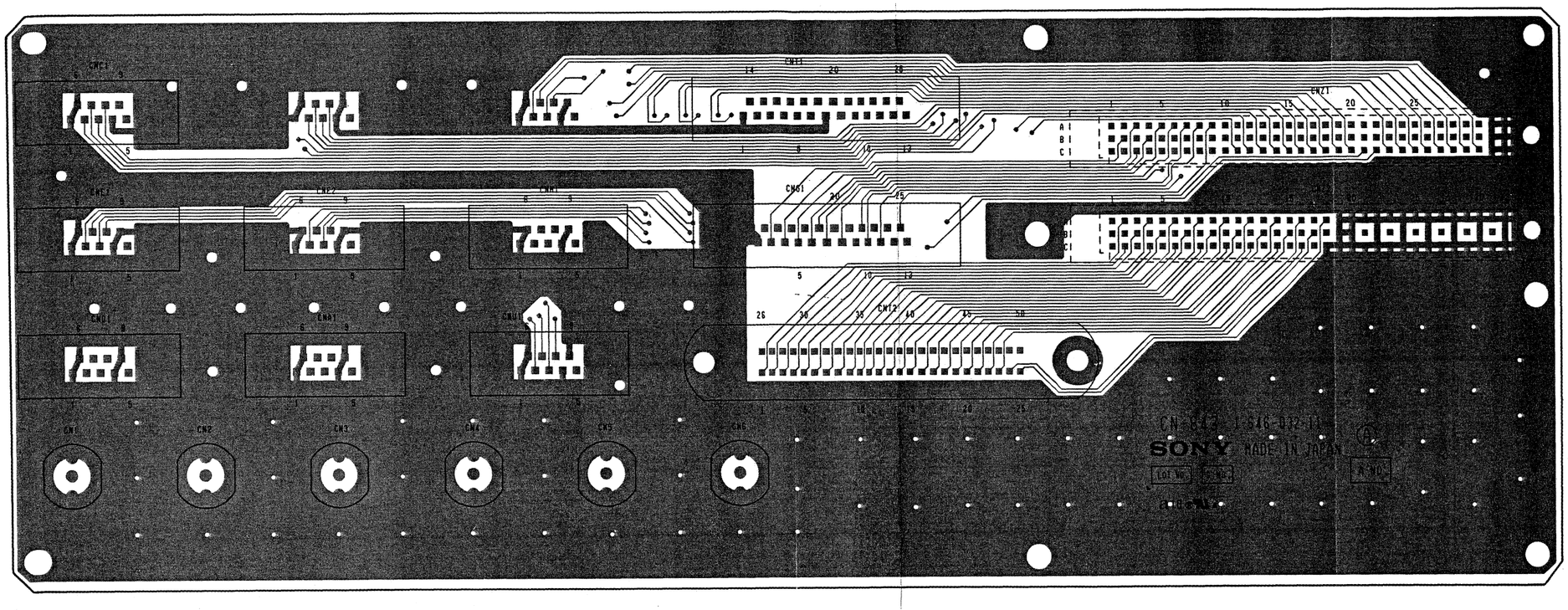

CN-843 -A SIDE-
1-646-032-11
DVS-6000/6000C

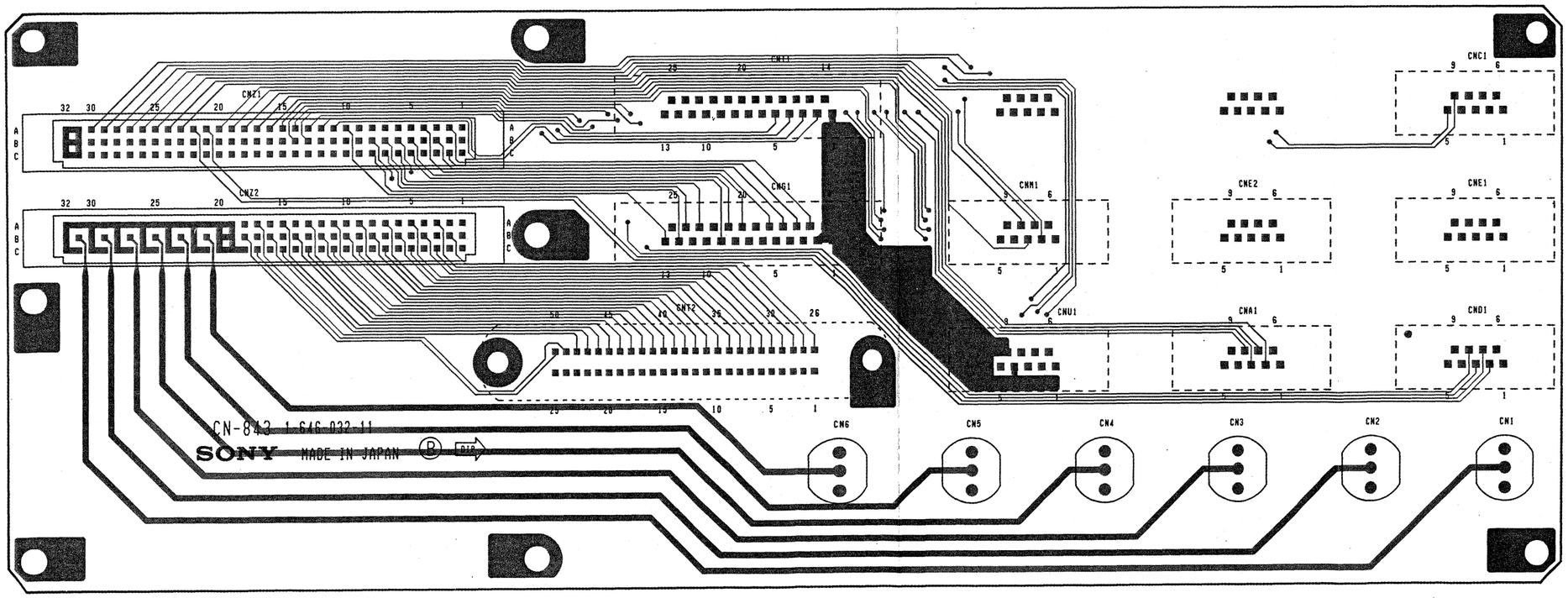

CN-843 -B SIDE-
1-646-032-11
DVS-6000/6000C

4-41

MB-482;Mother Board

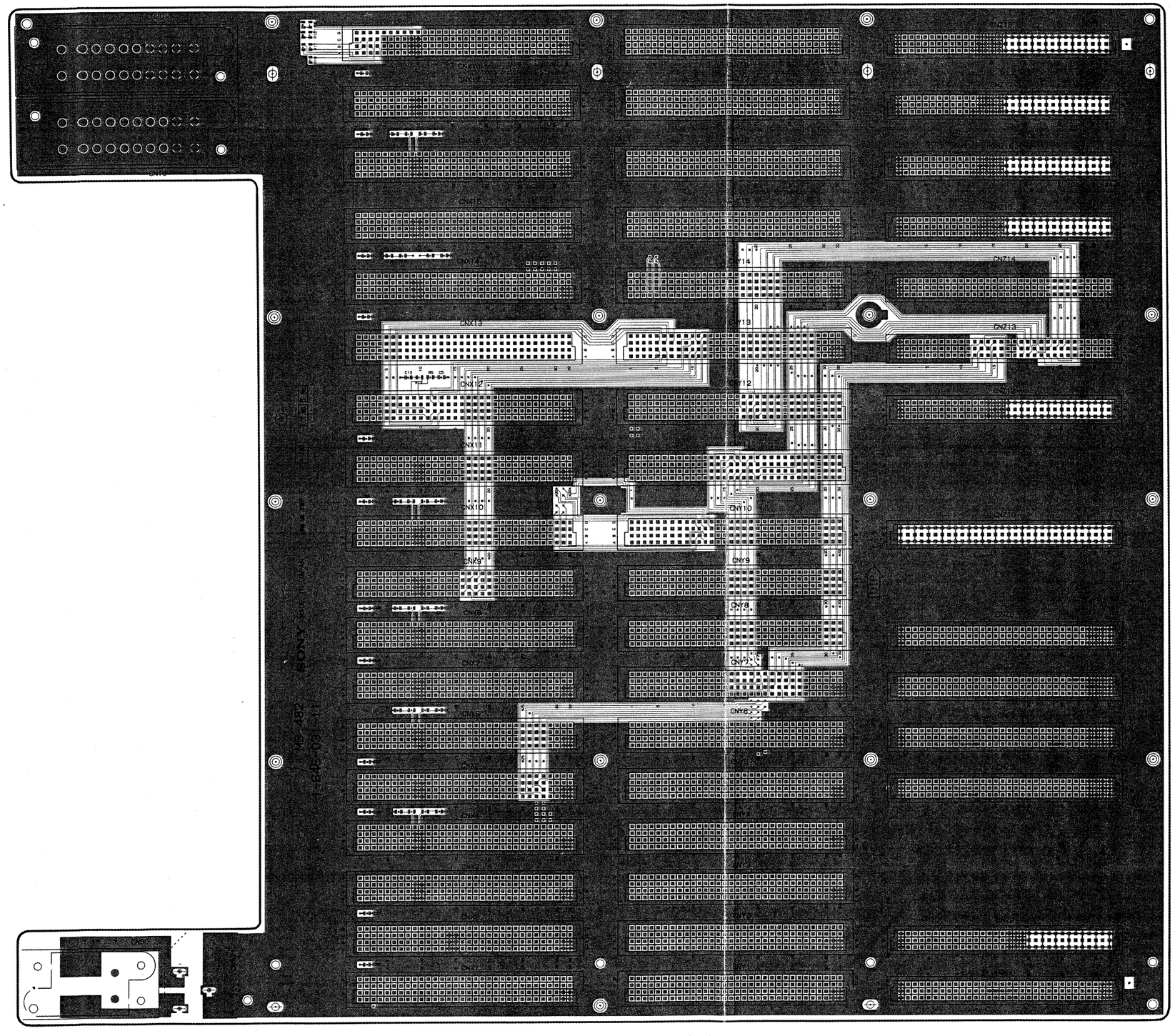

MB-482 -A SIDE-
1-646-031-11
DVS-6000/6000C

4-42

MB-482;Mother Board

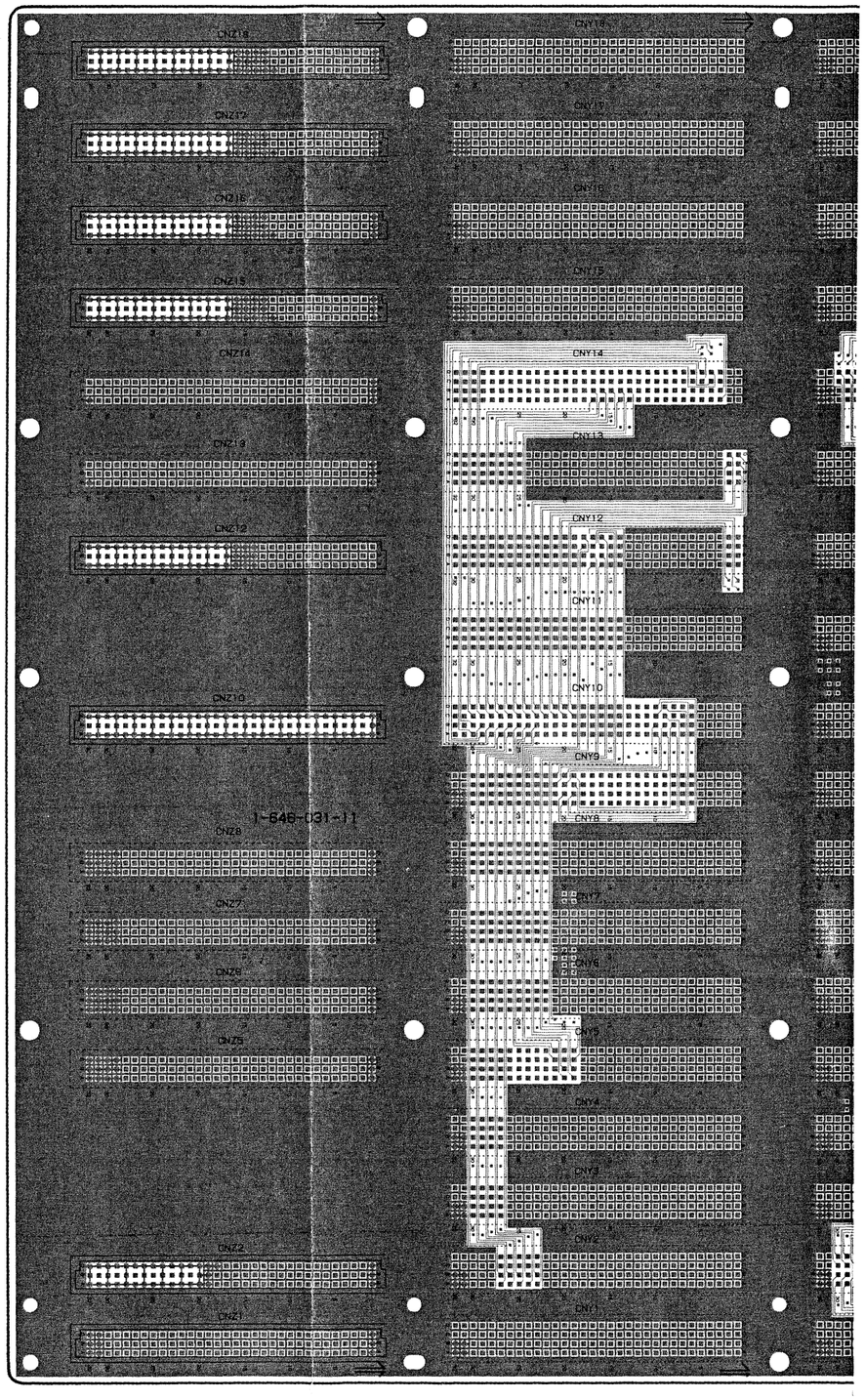

MB-482;Mother Board

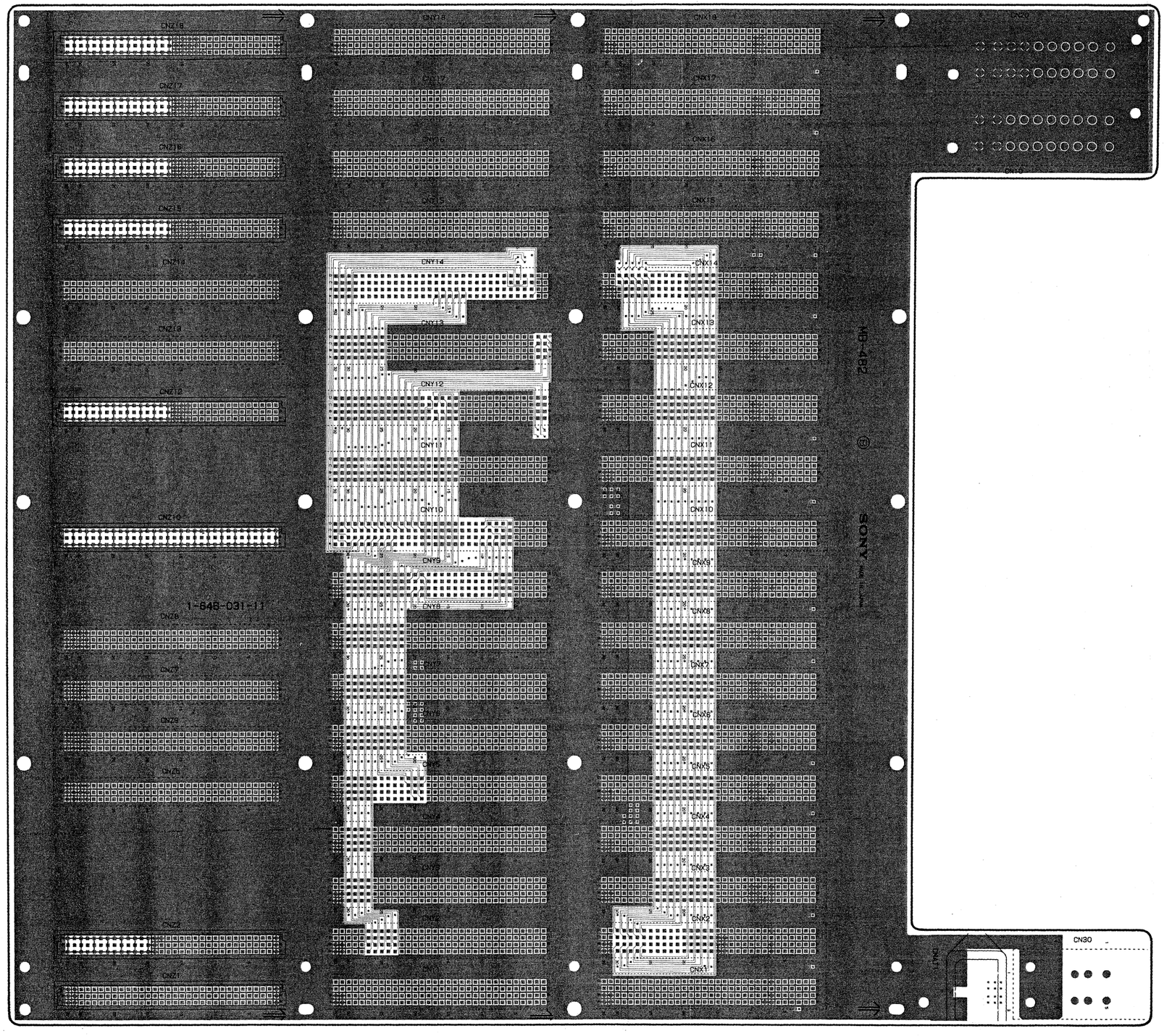

MB-482 -B SIDE-
1-646-031-11
DVS-6000/6000C

RE-96;Power Supply AC-DC Board

RE-96(1-646-847-11)

CN1	A-1
CN2	B-2
CN3	A-5
CN4	A-6
CN5	C-8
CN6	C-8
CN7	L-2
CN8	L-3
CN9	L-4
CN10	L-5
CN11	L-6
CN12	L-7
CN13	F-8
CN14	E-1
CN15	E-1
CN16	F-1
CN17	F-1
CP1	J-1
CP2	J-3
CP3	J-6
D1	C-6
D2	D-6
D3	E-5
D4	D-5
D5	F-6
D6	D-1
D7	G-2
D8	G-4
D9	G-7
D11	C-7
D12	D-7
D13	H-8
D14	H-8
D15	J-8
F1	A-7
IC1	E-6
IC2	F-6
LF1	B-3
PH1	D-5
Q4	F-5
Q5	D-5
Q6	F-5
RV1	H-8
RV2	J-8
RV3	J-8
TH1	F-1
VDR1	D-8

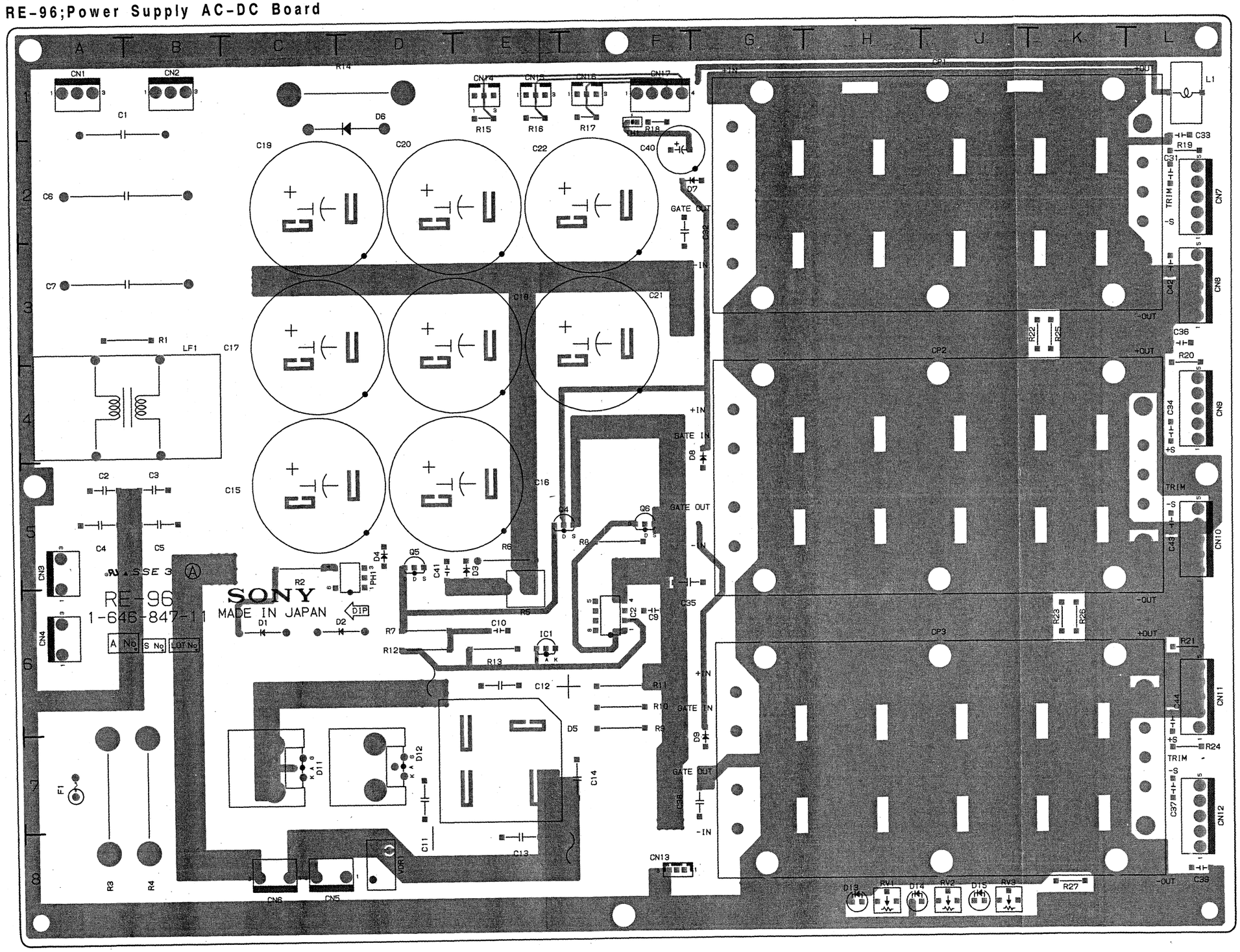

RE-96 -A SIDE
1-646-847-11
DVS-6000/6000C

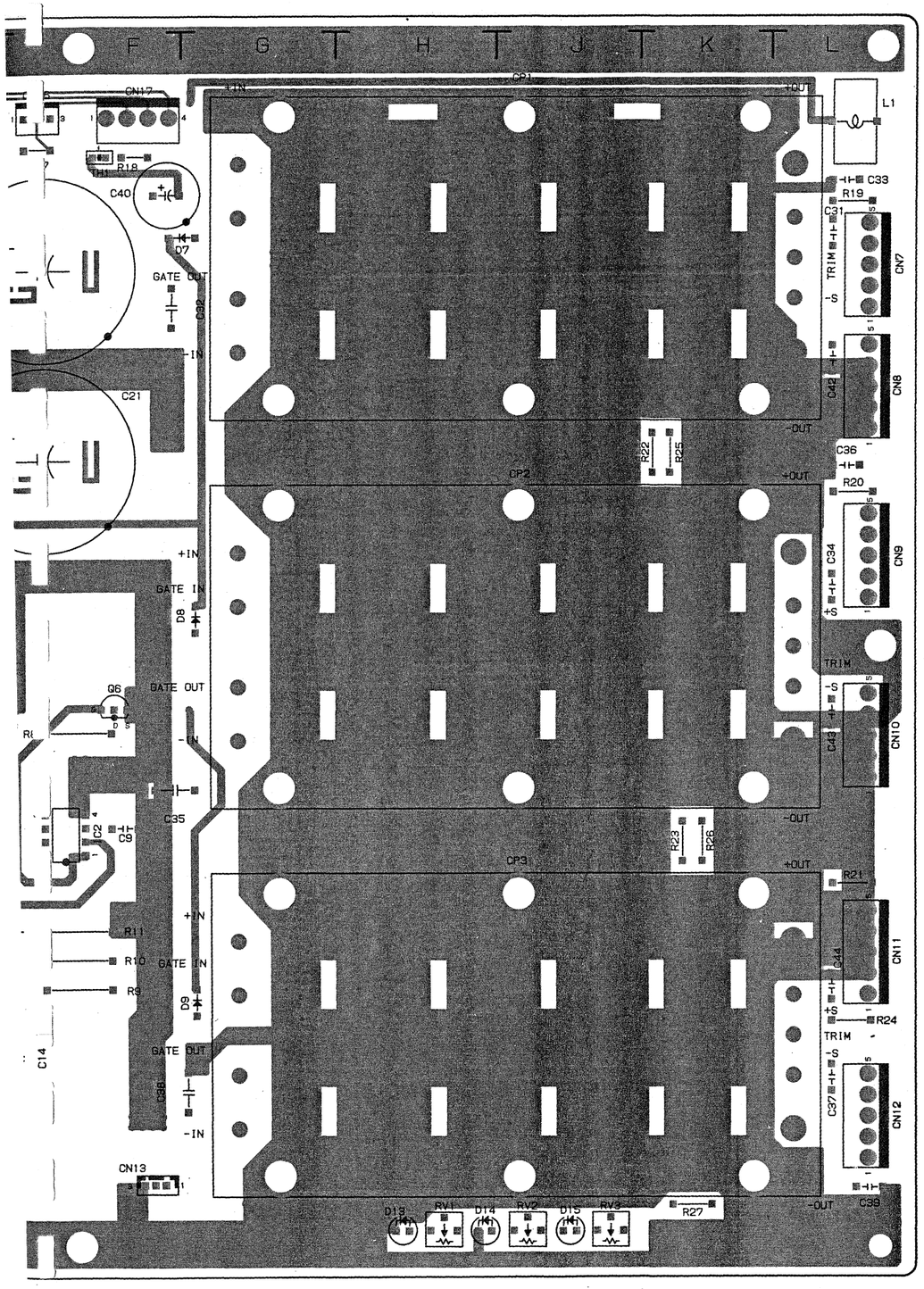

LE-76;Power LED Board

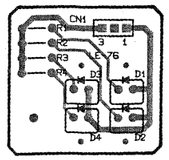

LE-76 -A SIDE-

1-631-489-11

RE-96 -A SIDE-

1-646-847-11
DVS-6000/6000C

RE-96;Power Supply AC-DC Board

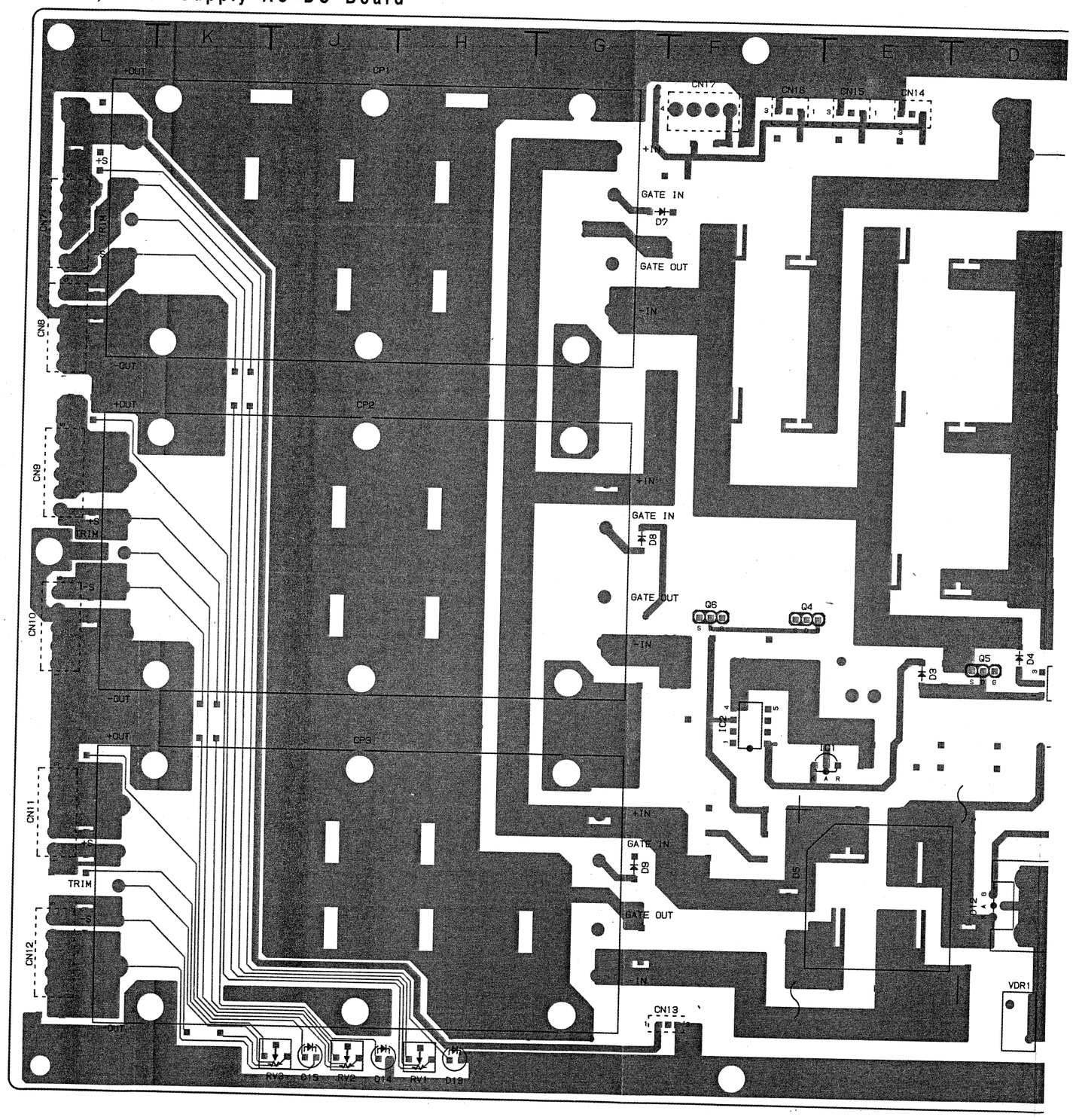

wer Supply AC-DC Board

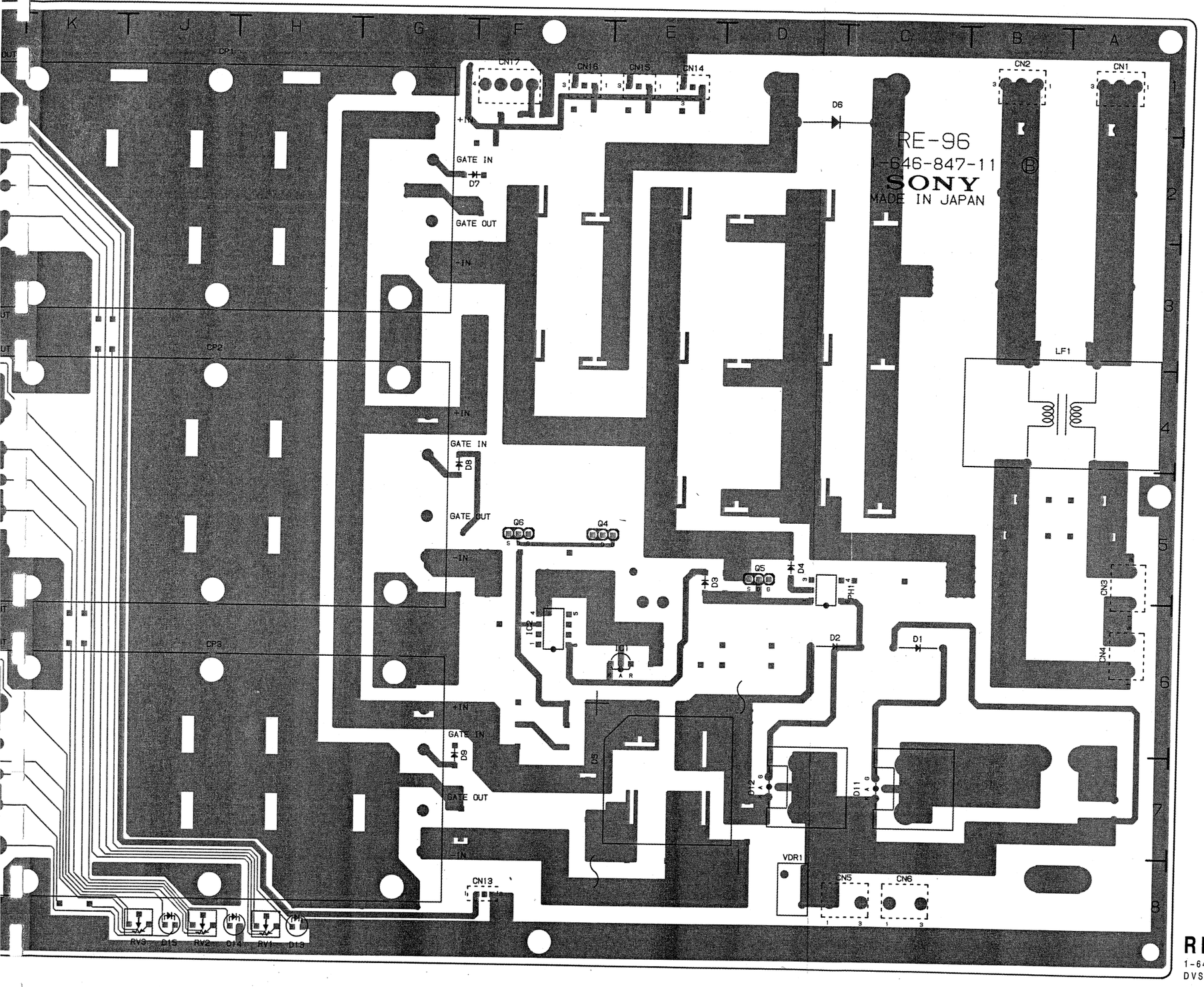

RE-96 -B SIDE-
1-646-847-11
DVS-6000/6000C

RE-96(1-646-847-11)

CN1	A-1
CN2	B-2
CN3	A-5
CN4	A-6
CN5	C-8
CN6	C-8
CN7	L-2
CN8	L-3
CN9	L-4
CN10	L-5
CN11	L-6
CN12	L-7
CN13	F-8
CN14	E-1
CN15	E-1
CN16	F-1
CN17	F-1
CP1	J-1
CP2	J-3
CP3	J-6
D1	C-6
D2	D-6
D3	E-5
D4	D-5
D5	F-6
D6	D-1
D7	G-2
D8	G-4
D9	G-7
D11	C-7
D12	D-7
D13	H-8
D14	H-8
D15	J-8
F1	A-7
IC1	E-6
IC2	F-6
LF1	B-3
PH1	D-5
Q4	F-5
Q5	D-5
Q6	F-5
RV1	H-8
RV2	J-8
RV3	J-8
TH1	F-1
VDR1	D-8

SECTION 5
BLOCK DIAGRAMS

CPU-131(1/2) CPU-1

CPU-131(1/2) ; SYSTEM CONTROL BOARD

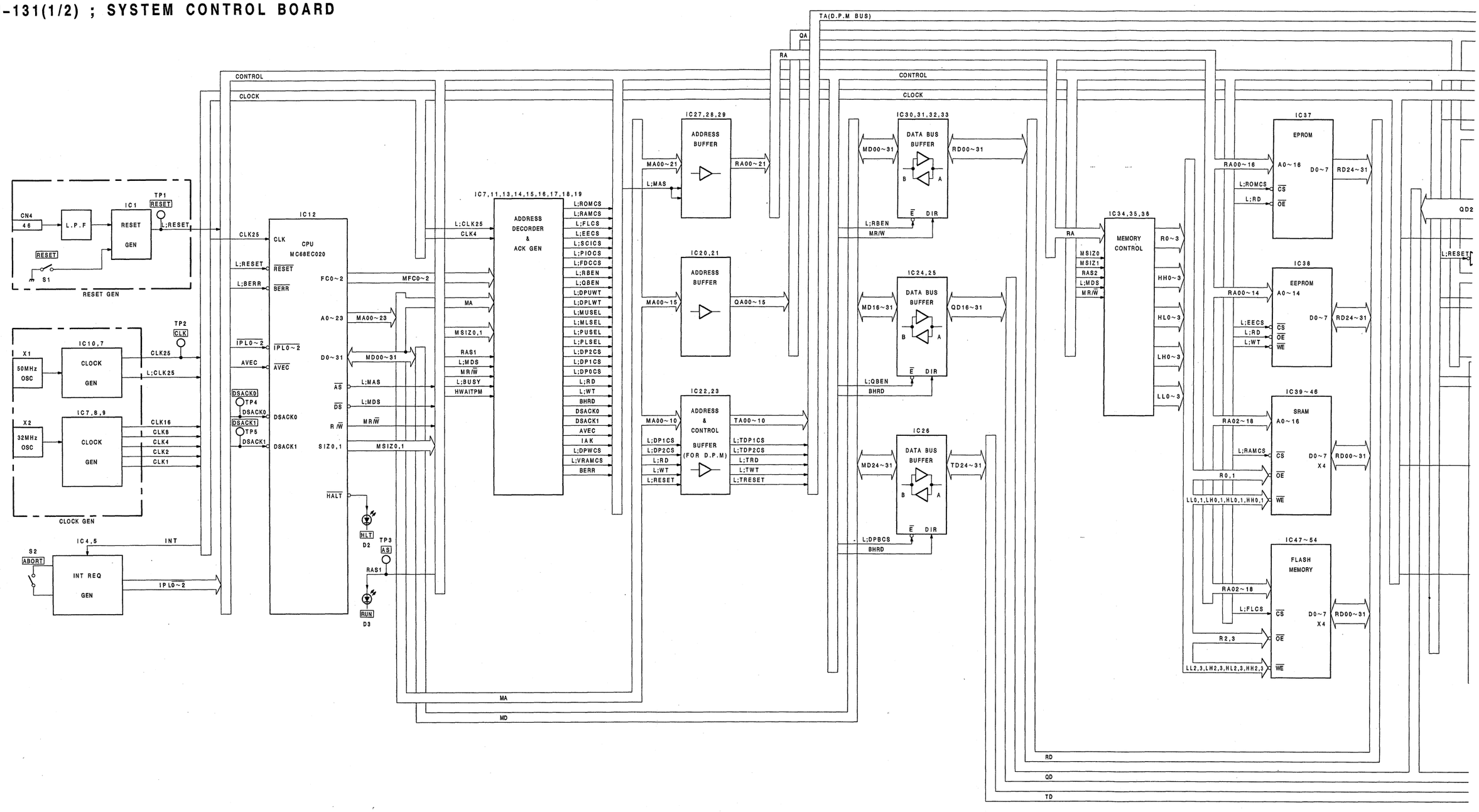

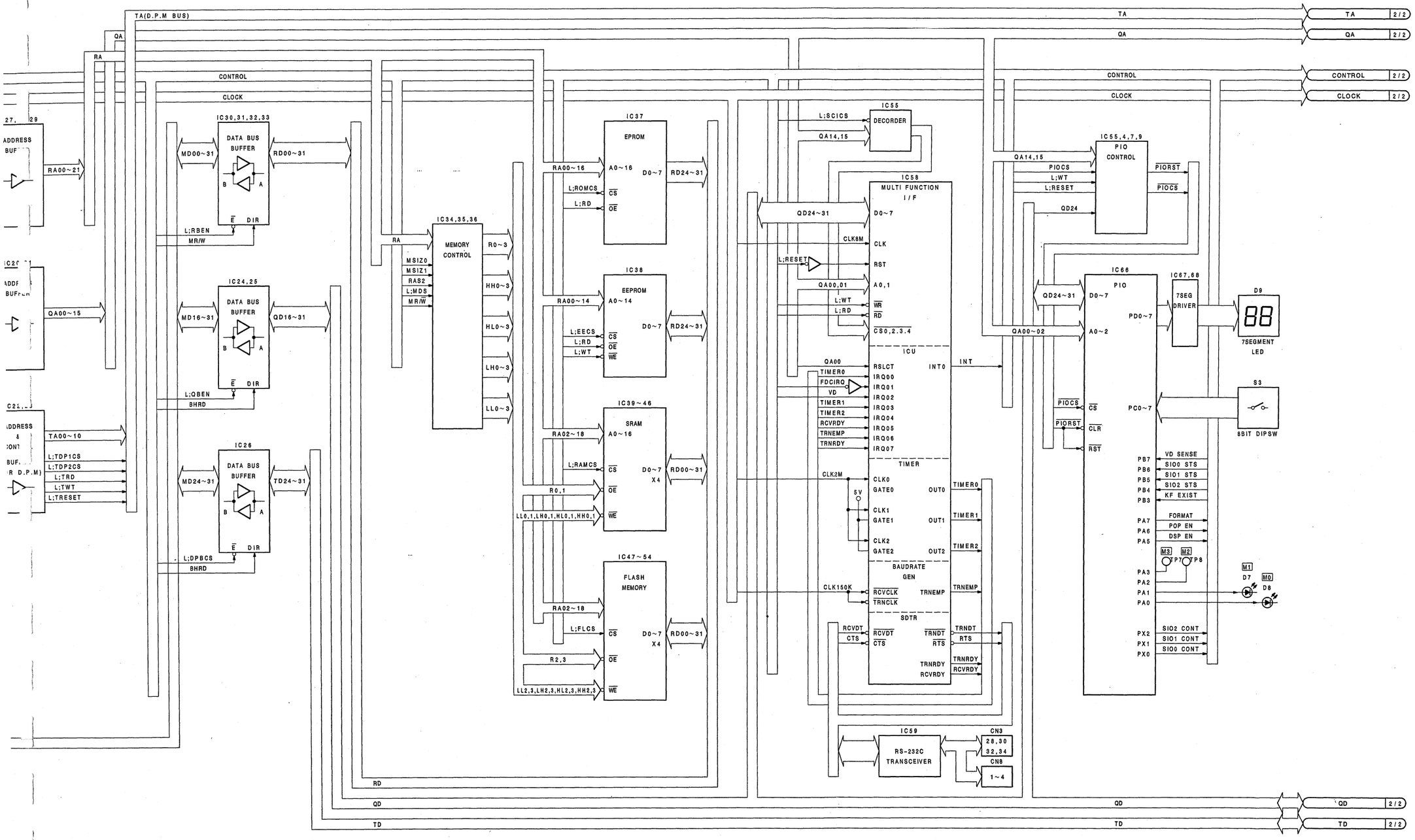

CPU-131 BOARD (1/2)

BKDS-6010

CPU-131(2/2);SYSTEM CONTROL BOARD

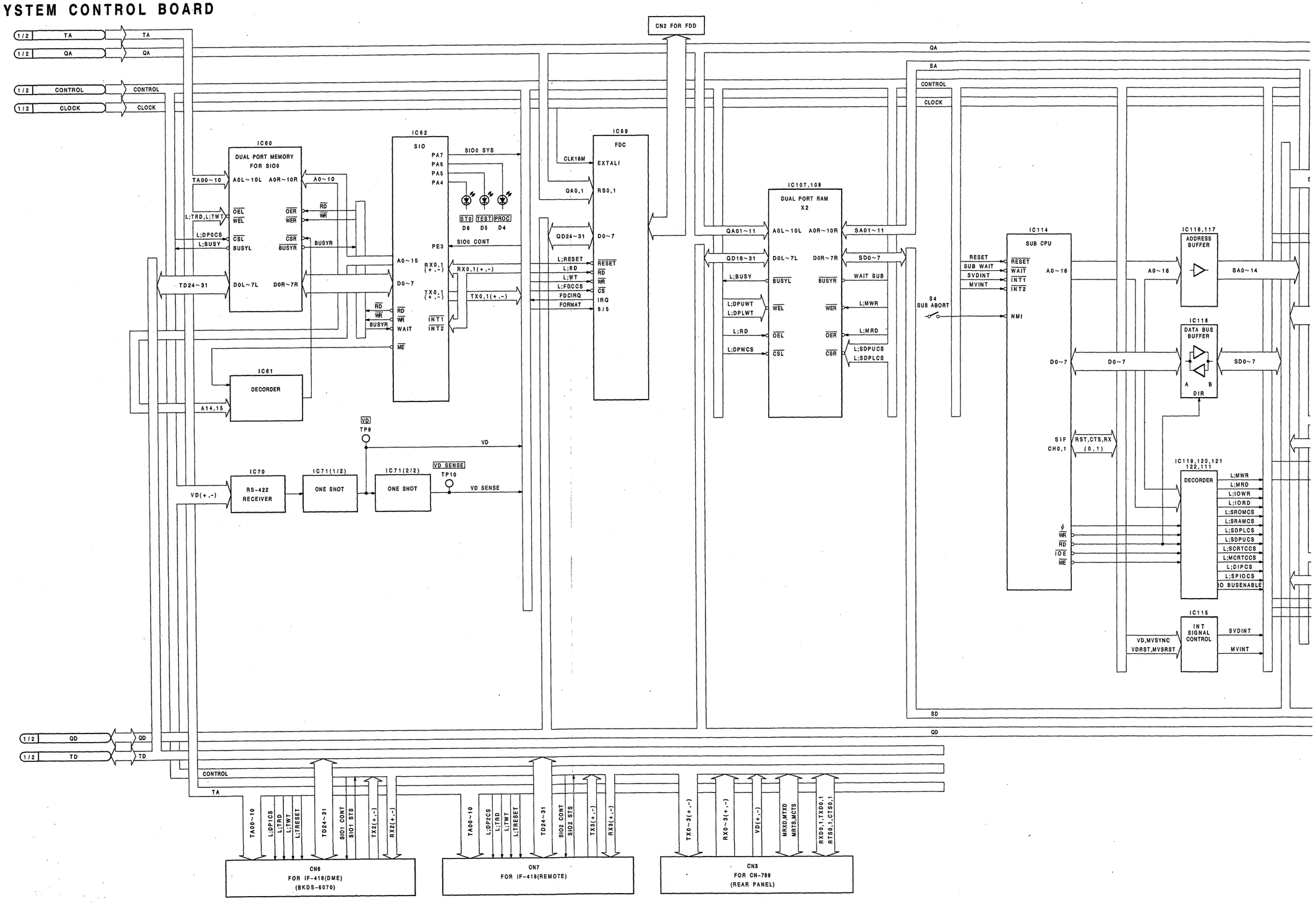

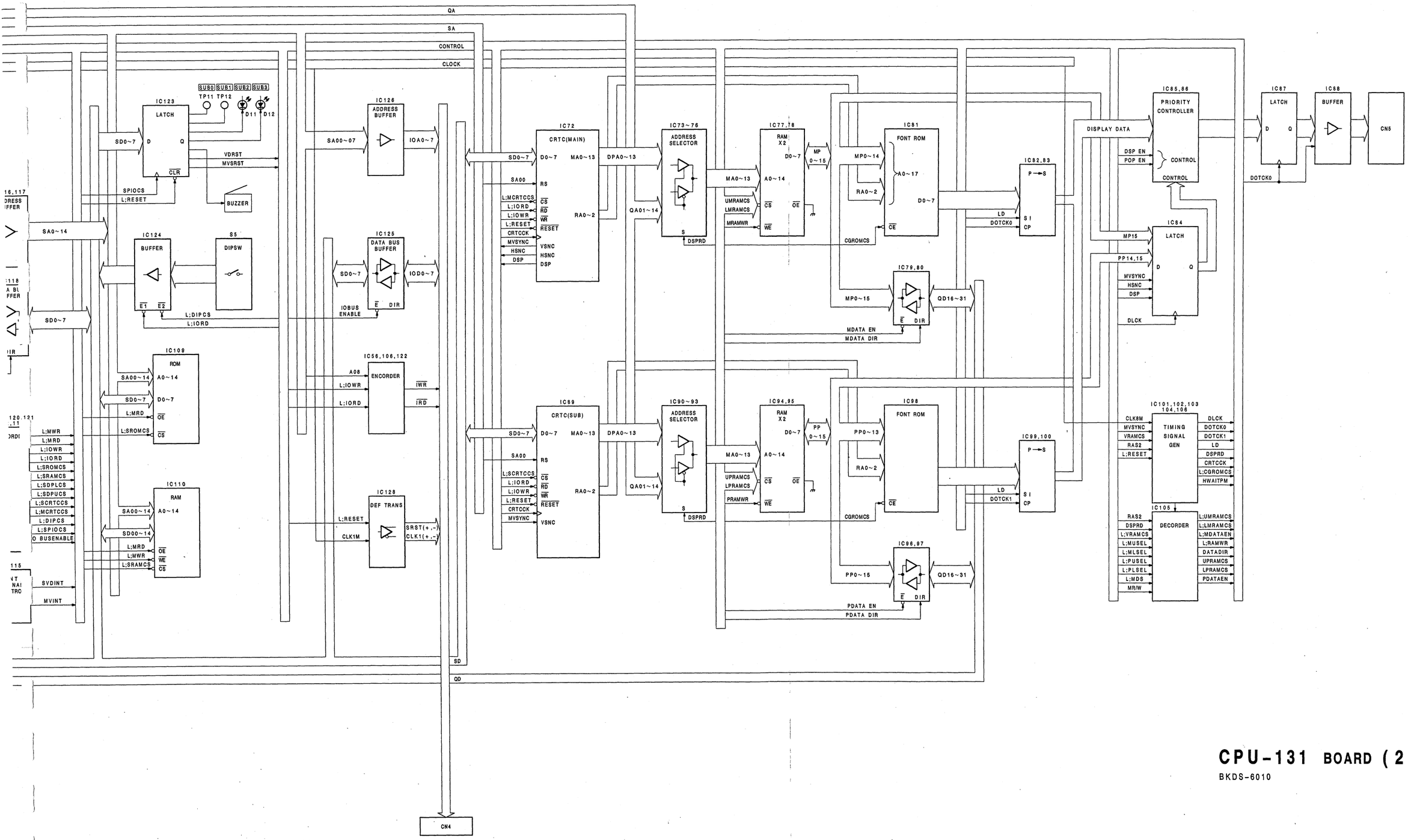

CPU-131 BOARD (2/2)

BKDS-6010

IF-403(A,B) ; SWITCH INTERFACE BOARD (FOR KY-239)
KY-238 ; SWITCH BOARD
KY-239(A,B) ; SWITCH BOARD

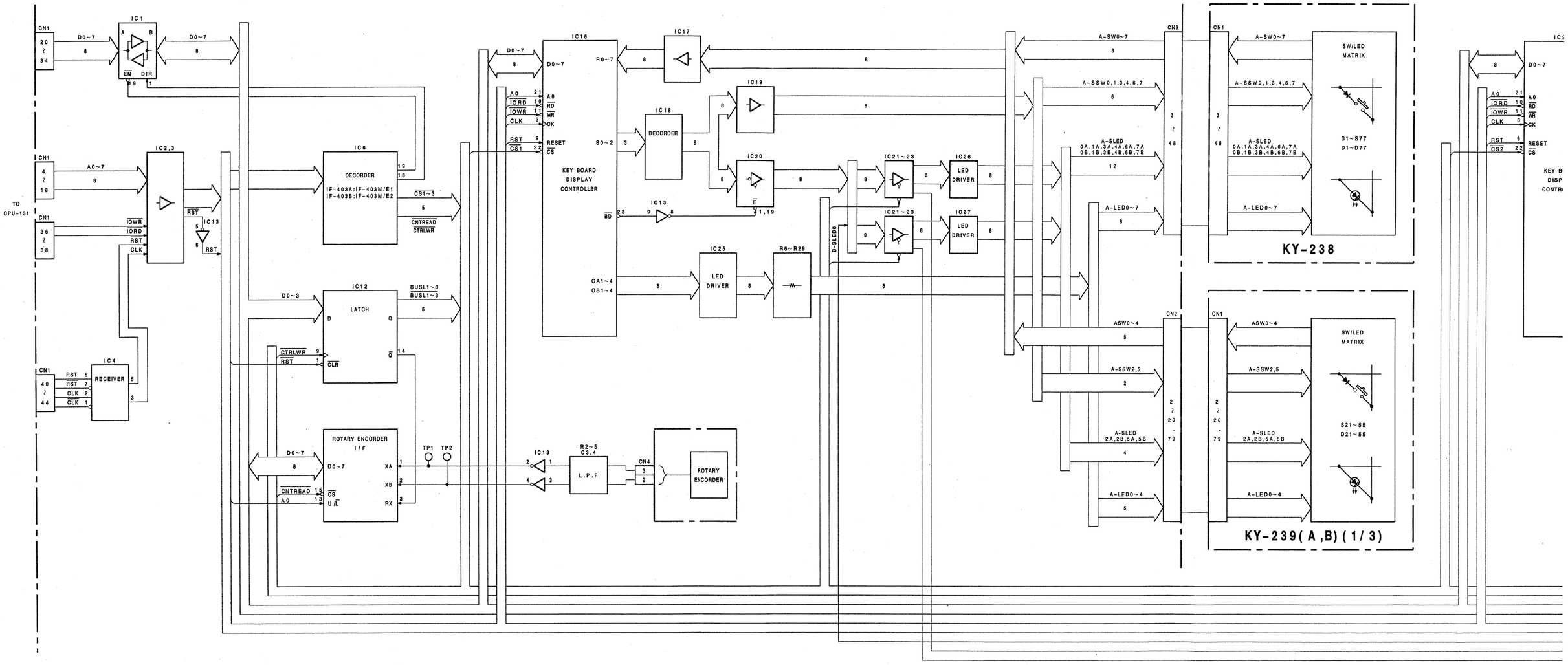

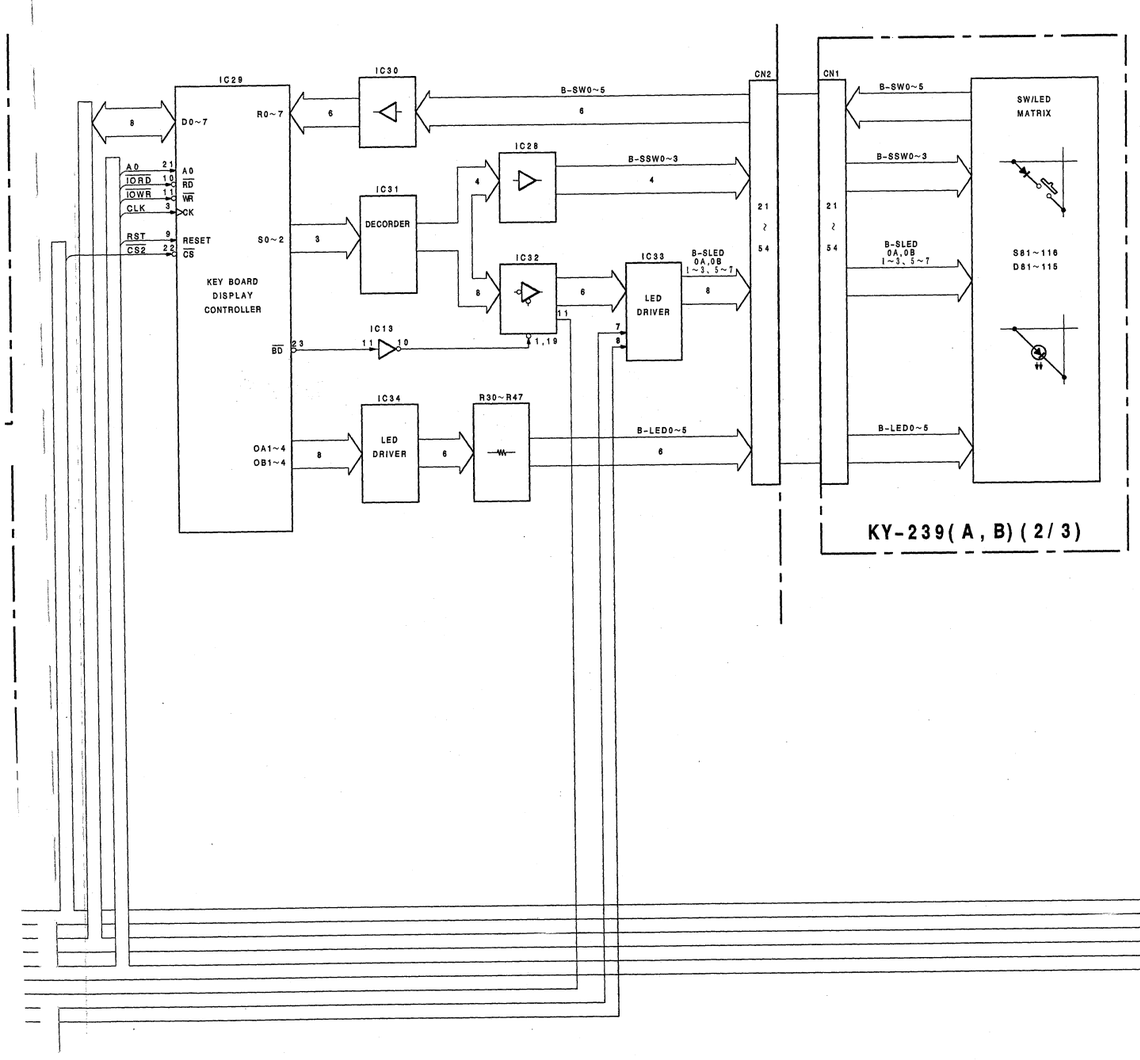

IF-403(A,B) BOARD
KY-238 BOARD
KY-239(A,B) BOARD
BKDS-6010

IF-404 ; SWITCH INTERFACE BOARD (FOR KY-243)
KY-243 ; SWITCH BOARD
KY-244 ; SWITCH BOARD
KY-245 ; SWITCH BOARD
KY-246 ; SWITCH BOARD

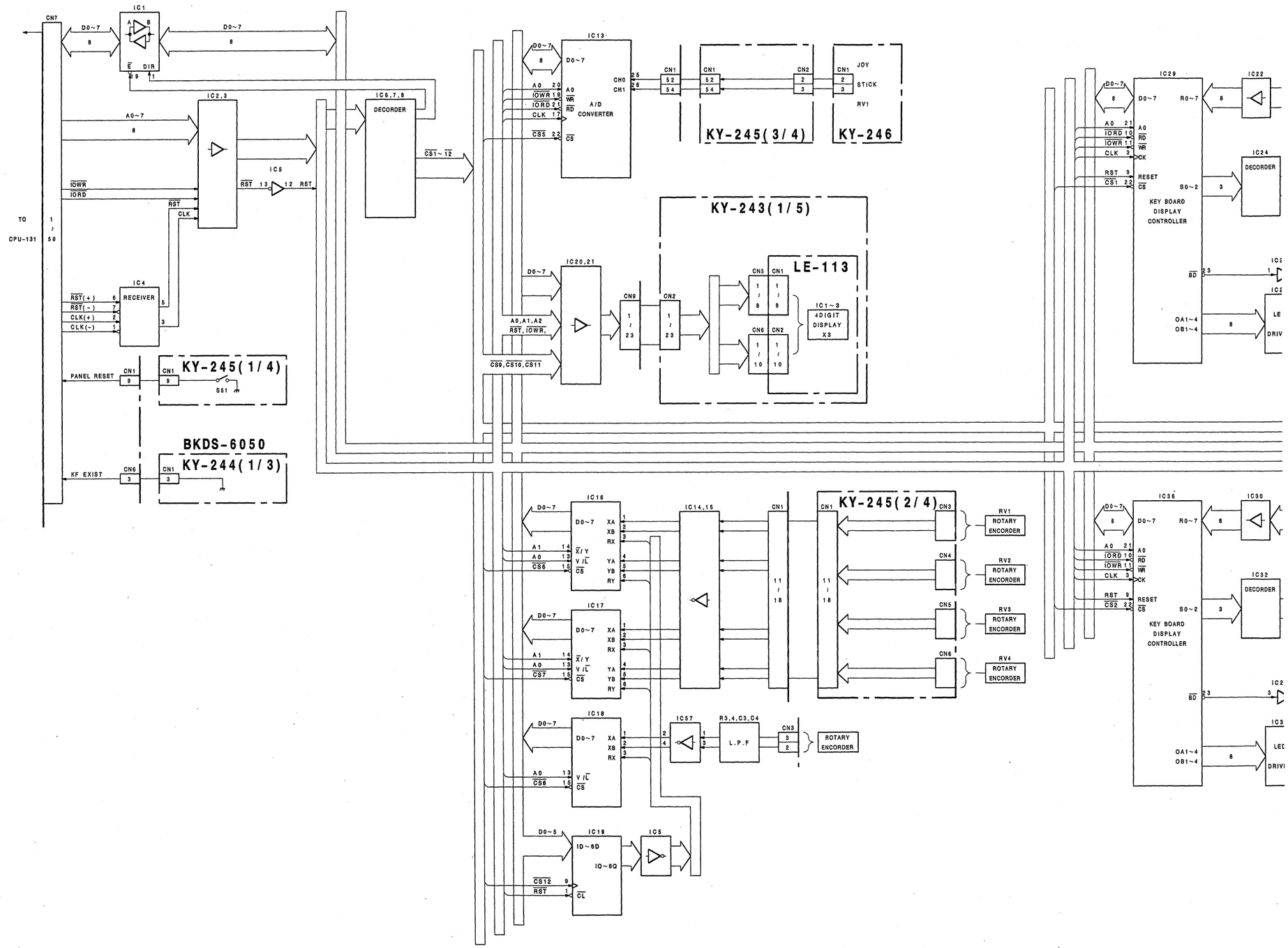

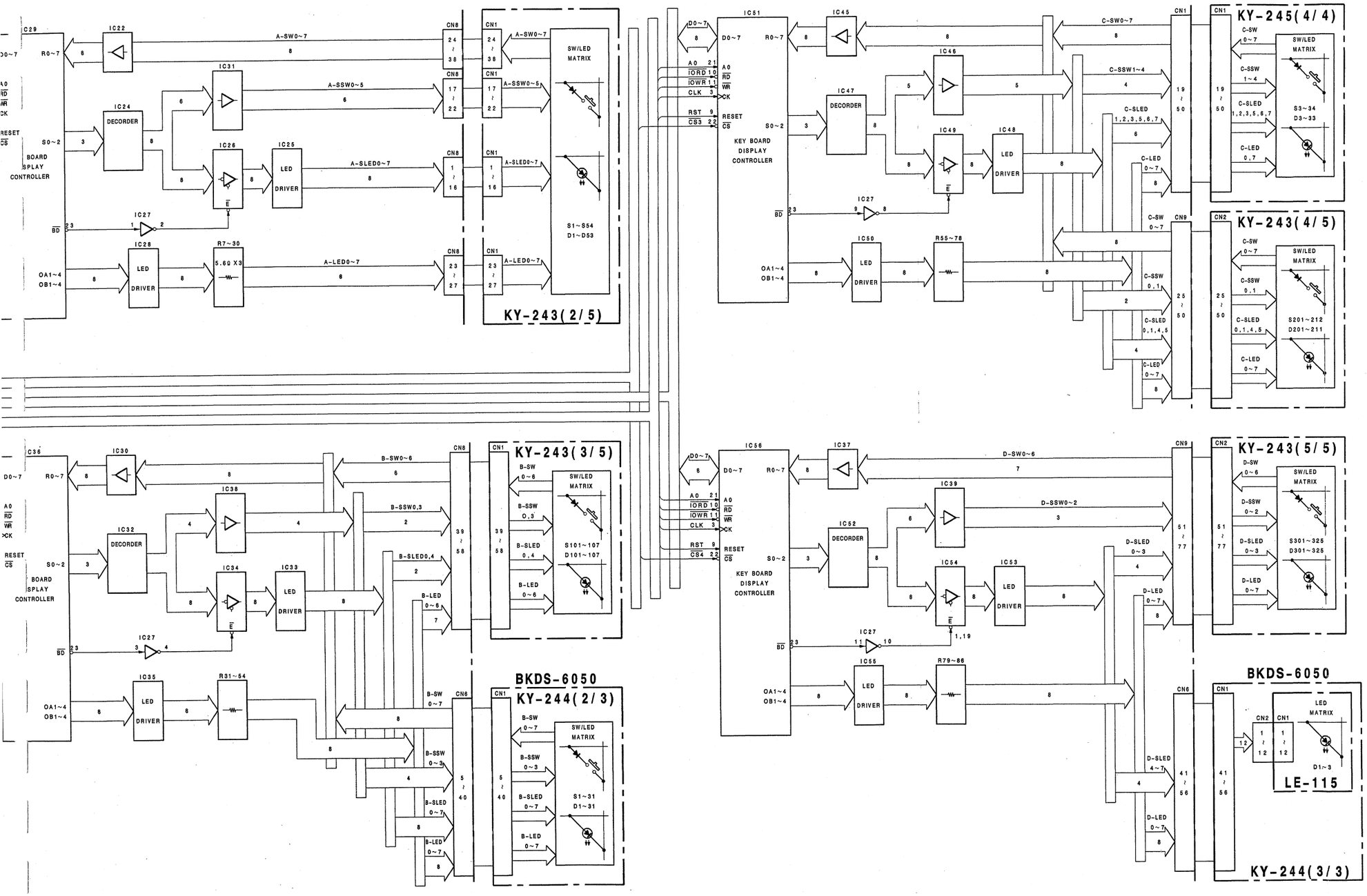

IF-404 BOARD
KY-243 BOARD
KY-244 BOARD
KY-245 BOARD
KY-246 BOARD
BKDS-6010

KY-240 ; SWITCH BOARD
KY-241 ; SWITCH BOARD
KY-242 ; SWITCH BOARD

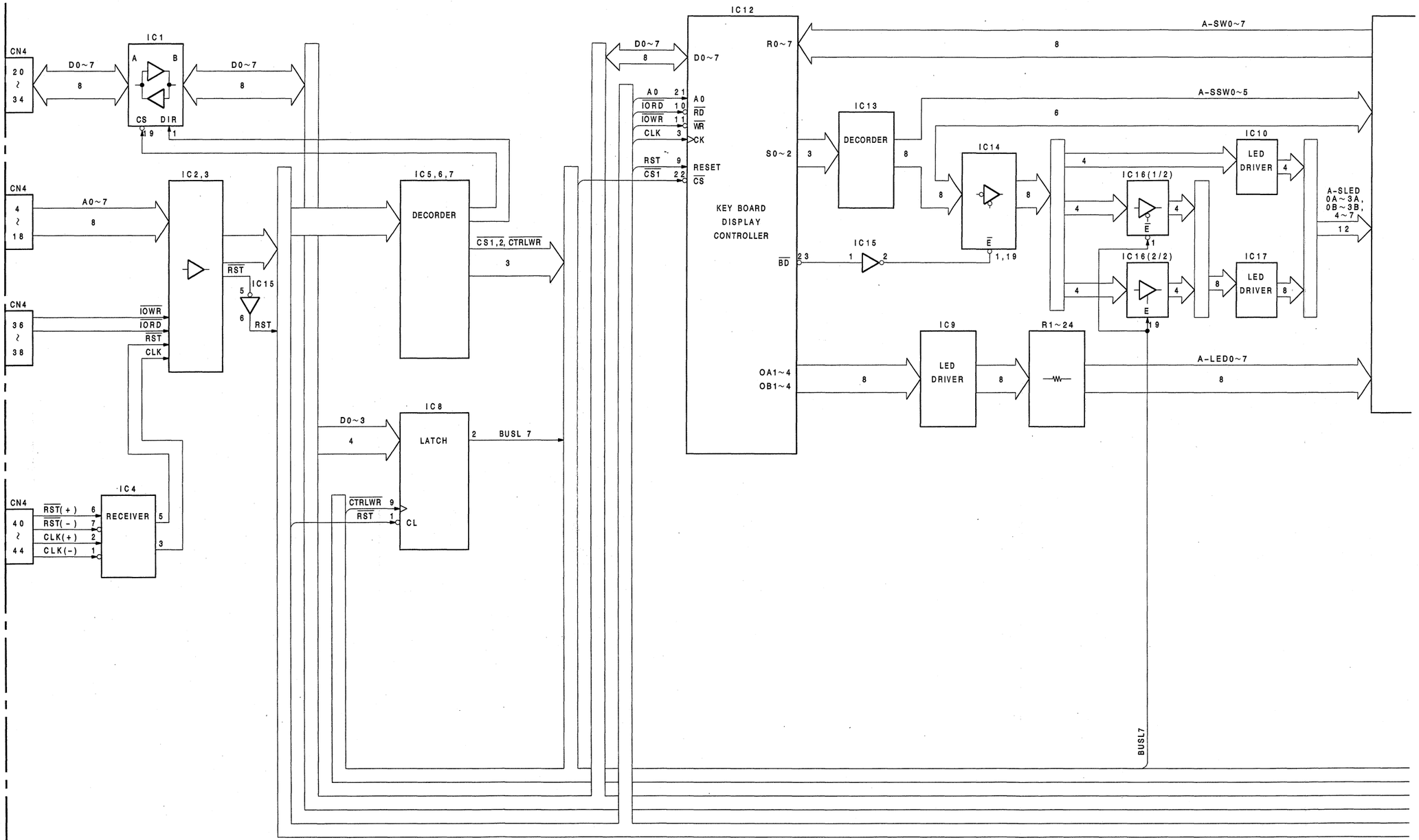

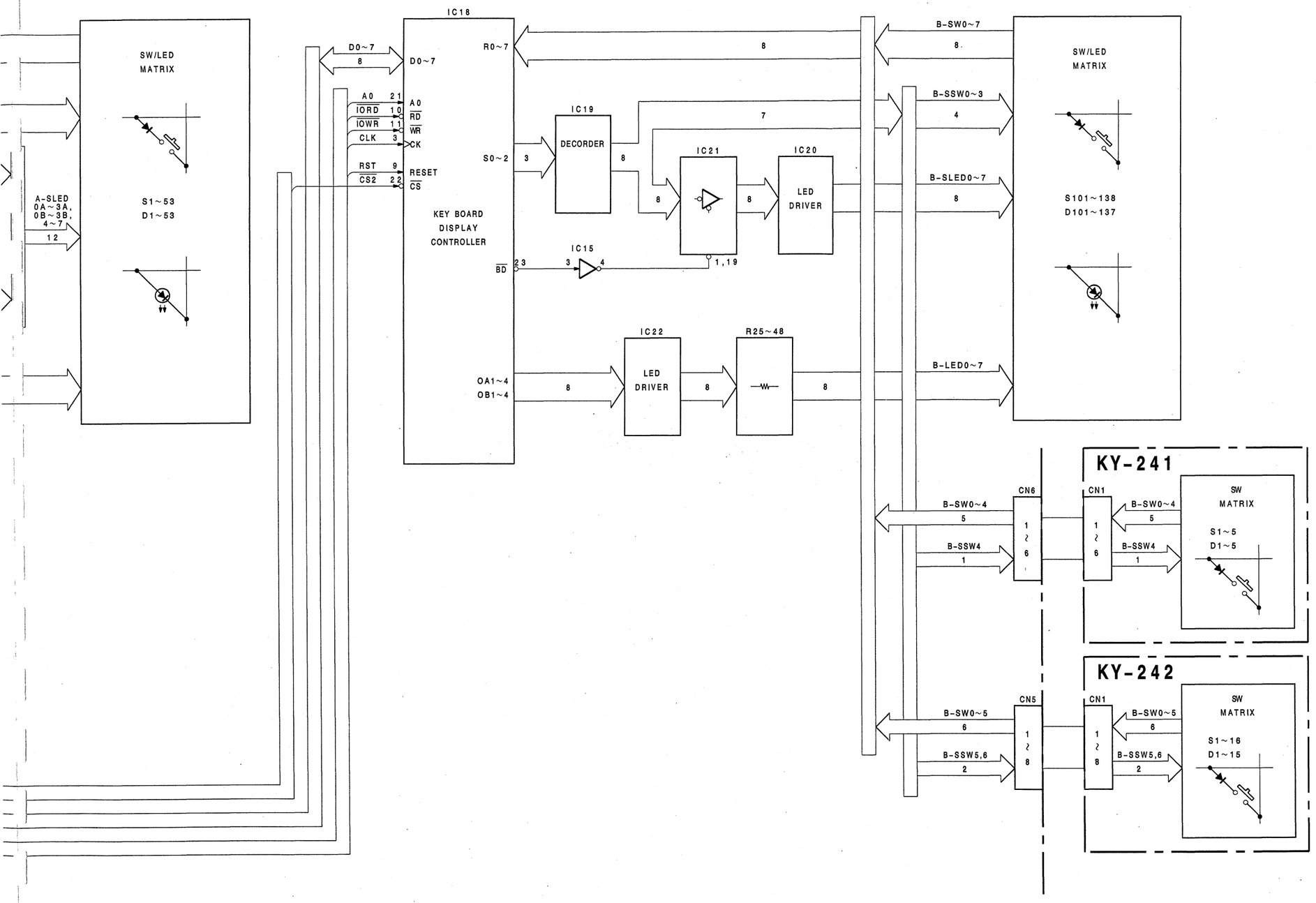

KY-240 BOARD
KY-241 BOARD
KY-242 BOARD
BKDS-6010

SECTION 6
SCHEMATIC DIAGRAMS

The circuit informations are provided below

Circuit Board	Circuit Function
CPU-131	SYSTEM CONTROL
CN-789	CONNECTOR
CN-790	CONNECTOR
IF-403	SWITCH INTERFACE (FOR KY-239)
IF-404	SWITCH INTERFACE (FOR KY-243)
IF-418	INTERFACE (BKDS-6050)
KY-238	SWITCH
KY-239(A,B)	SWITCH
KY-240	SWITCH
KY-241	SWITCH
KY-242	SWITCH
KY-243	SWITCH
KY-244	SWITCH (BKDS-6050)
KY-245	SWITCH
KY-246	SWITCH
LE-111	LED
LE-112	LED
LE-113	LED
LE-114	LED
LE-115	LED (BKDS-6050)

回路図において、ＲＥＦ．ＮＯの近傍に下記記号が記載されていますが、これは生産時の部品データです。

In the schematic diagrams,the following marks are described nearby reference number.
These are parts data at factory.

CAPACITOR (C)

AL, AS } ELECTROLYTIC
TA } TANTALUM
CA, CC, CCS, CM, CS } CERAMIC
MPS, PP, PT } MYLAR
MD } DIPPED MICA
MS } MICA

RESISTOR (R)
VARIABLE RESISTOR

RC, RD } CARBON
RF } FUSE
RN, RS } METAL
RW } WIERWOUND

6 - 1

CPU-131(1/6);SYSTEM CONTROL BOARD

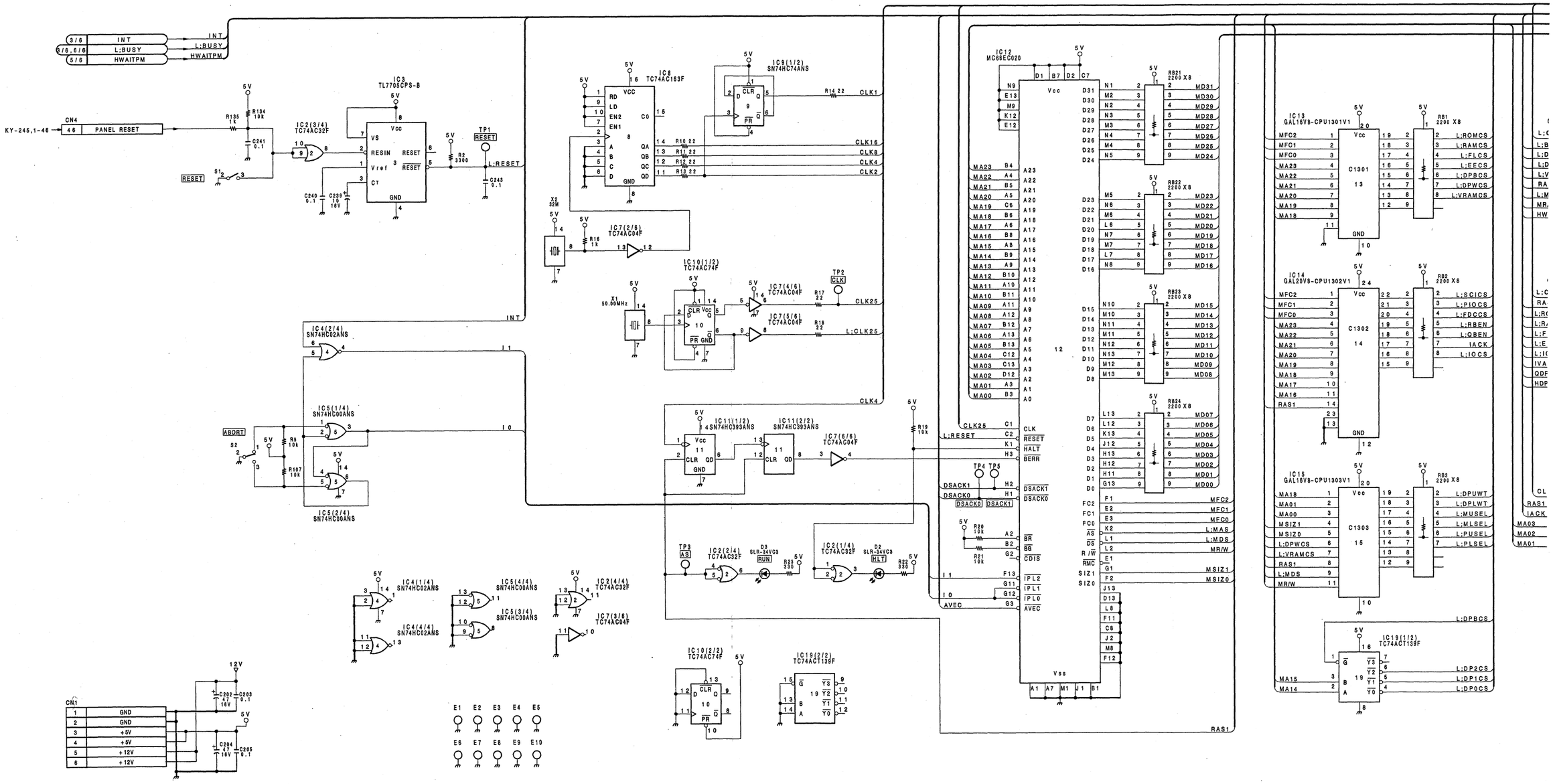

6-3(b)

A | B | C | D | E | F | G | H

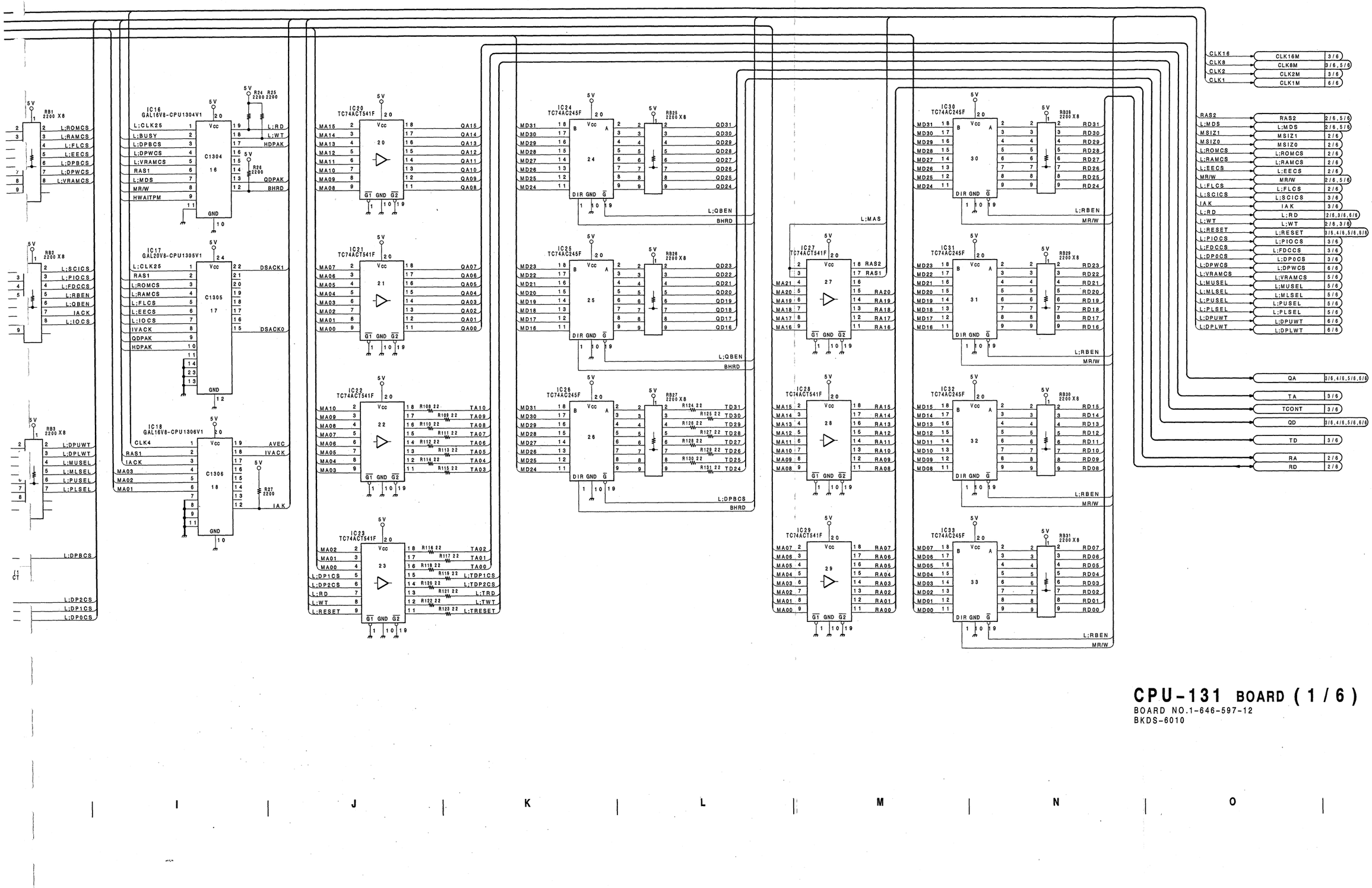

CPU-131 BOARD (1/6)

BOARD NO.1-646-597-12
BKDS-6010

CPU-131(2/6);SYSTEM CONTROL BOARD

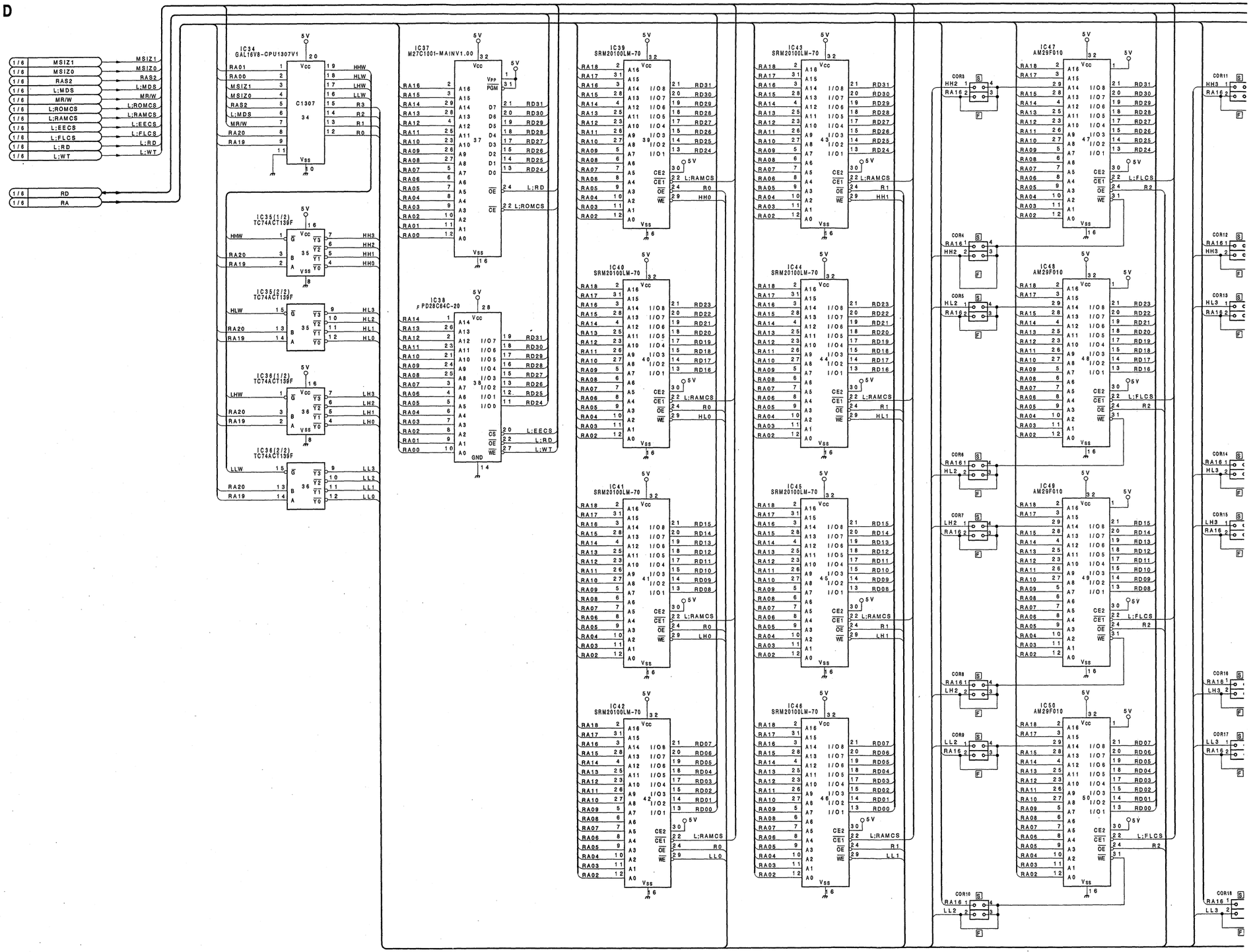

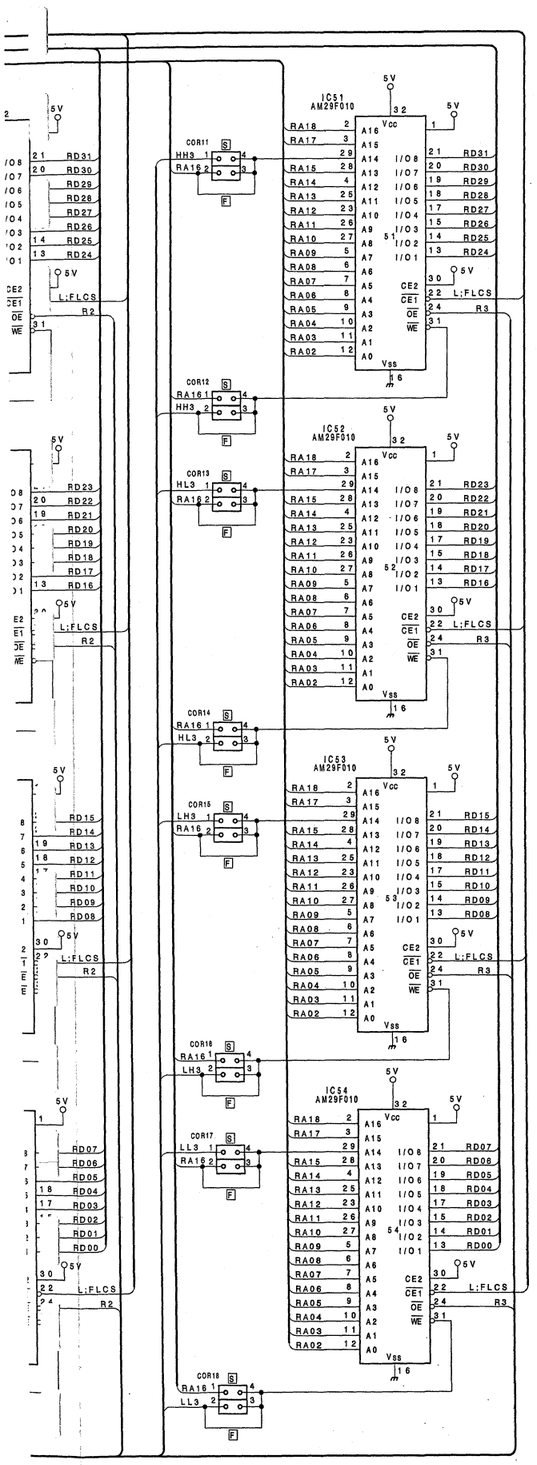

CPU-131 BOARD (2 / 6)

BOARD NO.1-646-597-12
BKDS-6010

CPU-131(3/6);SYSTEM CONTROL BOARD

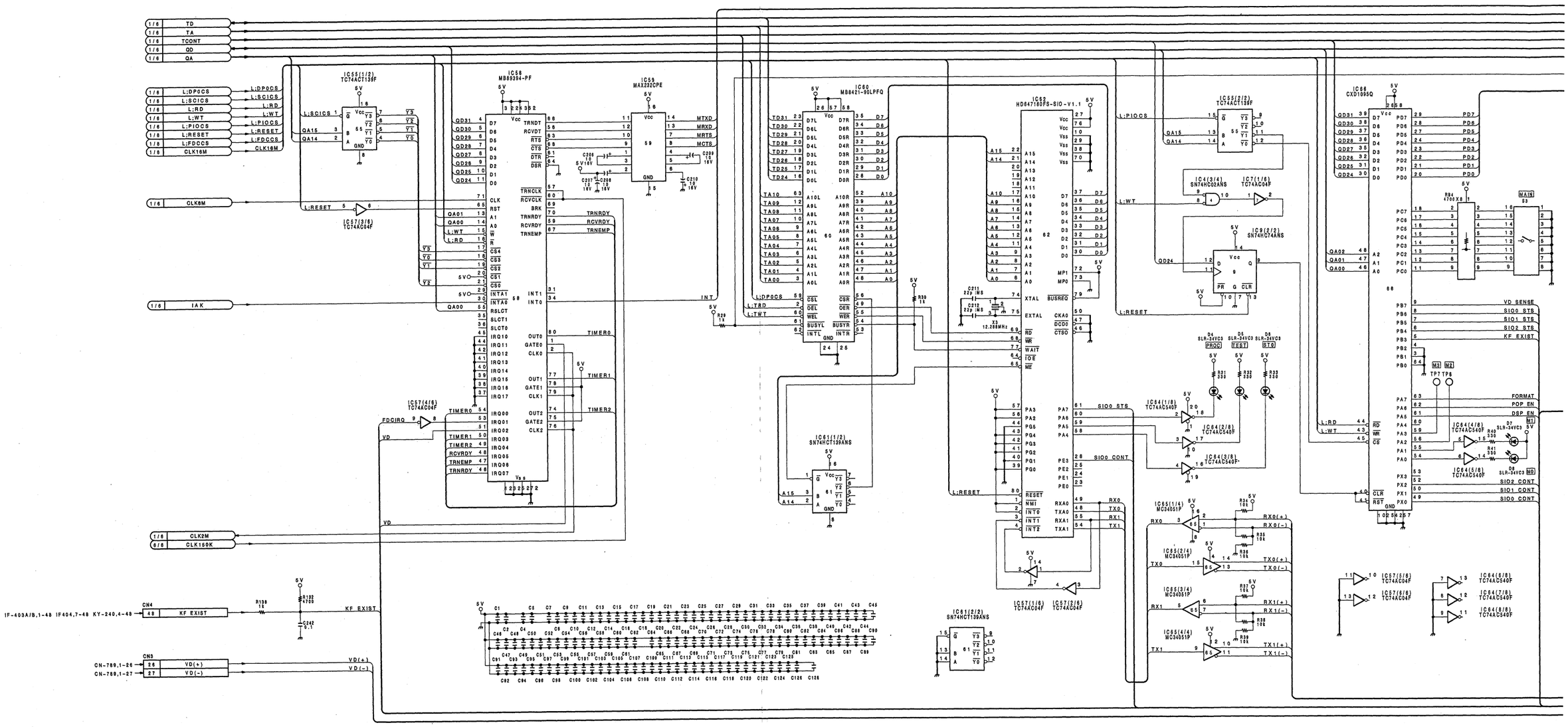

CPU-131 BOARD (3/6)

BOARD NO.1-646-597-12
BKDS-6010

6-5(b)

CPU-131(4/6);SYSTEM CONTROL BOARD

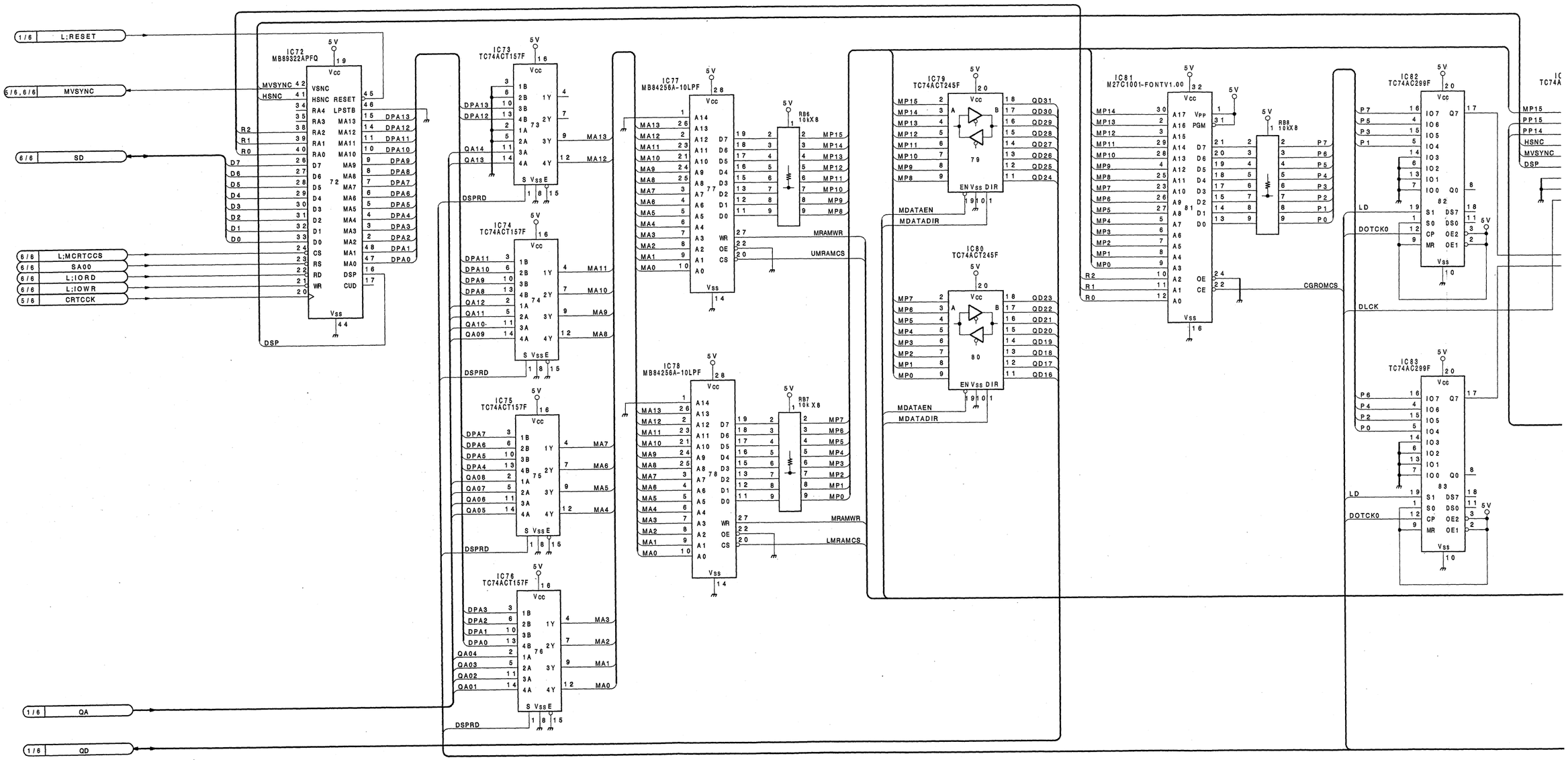

6-6(b)

A B C D E F G H

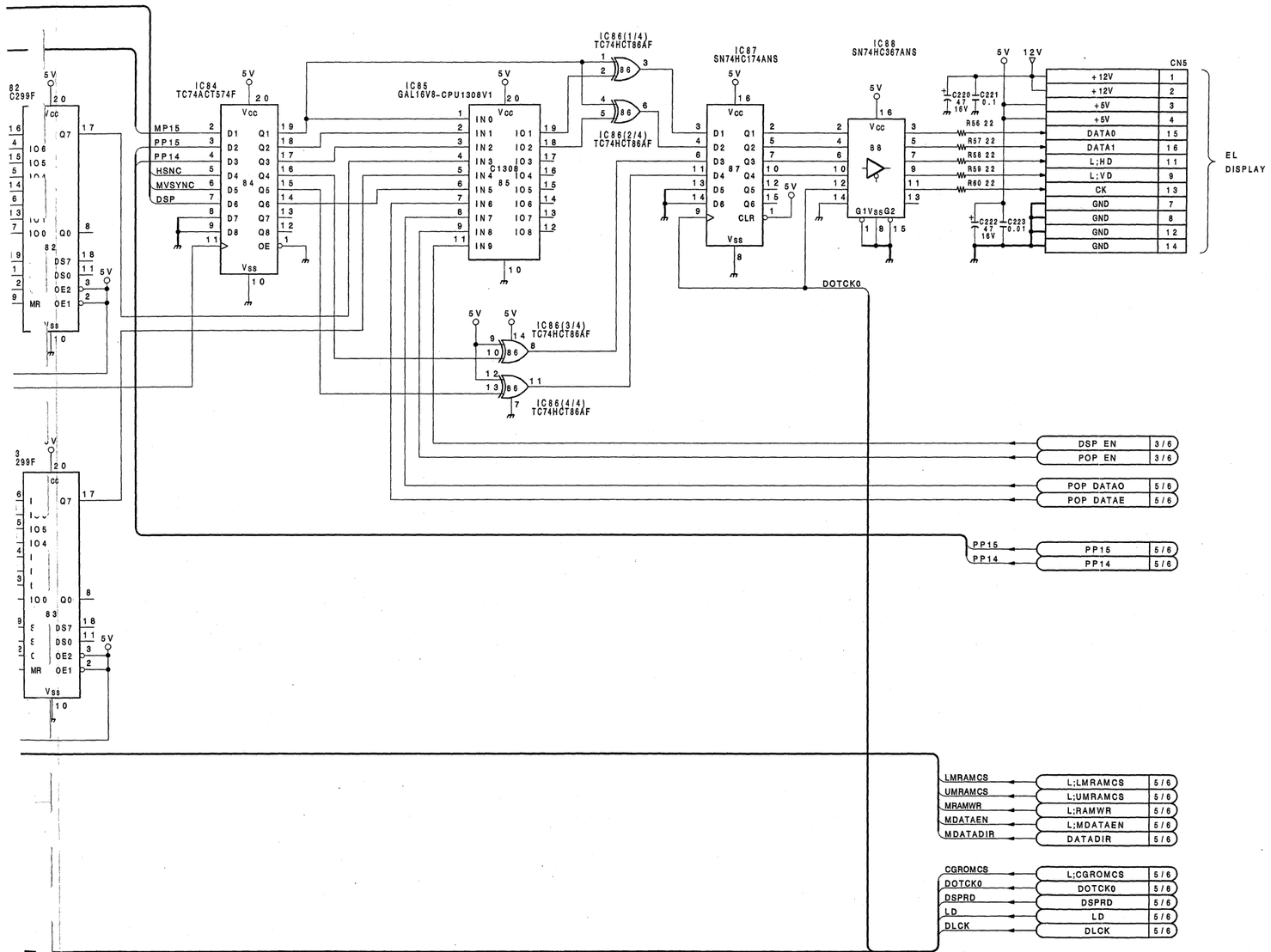

CPU-131 BOARD (4/6)

BOARD NO.1-646-597-12
BKDS-6010

CPU-131(5/6);SYSTEM CONTROL BOARD

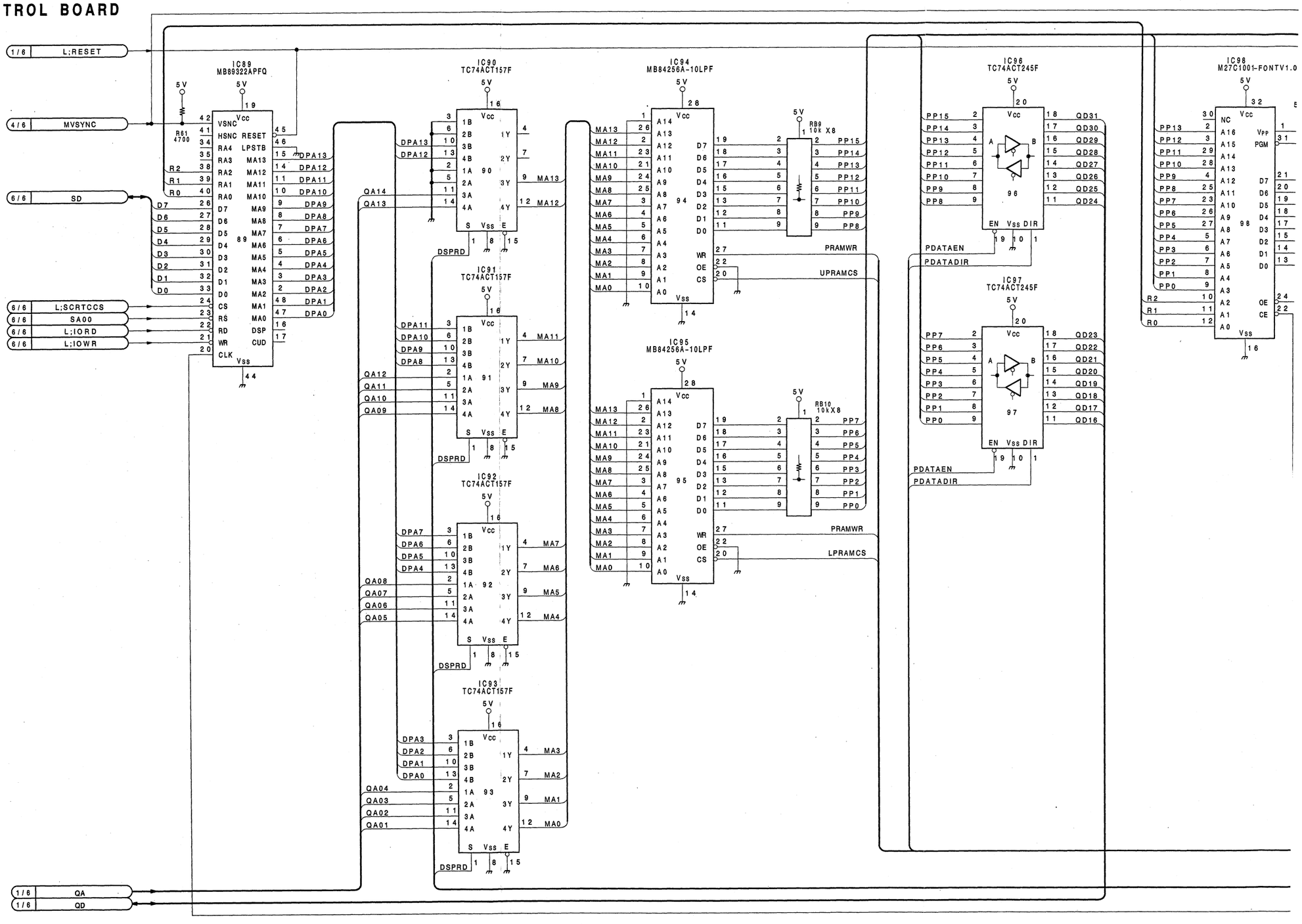

6-7(b)

A B C D E F G H

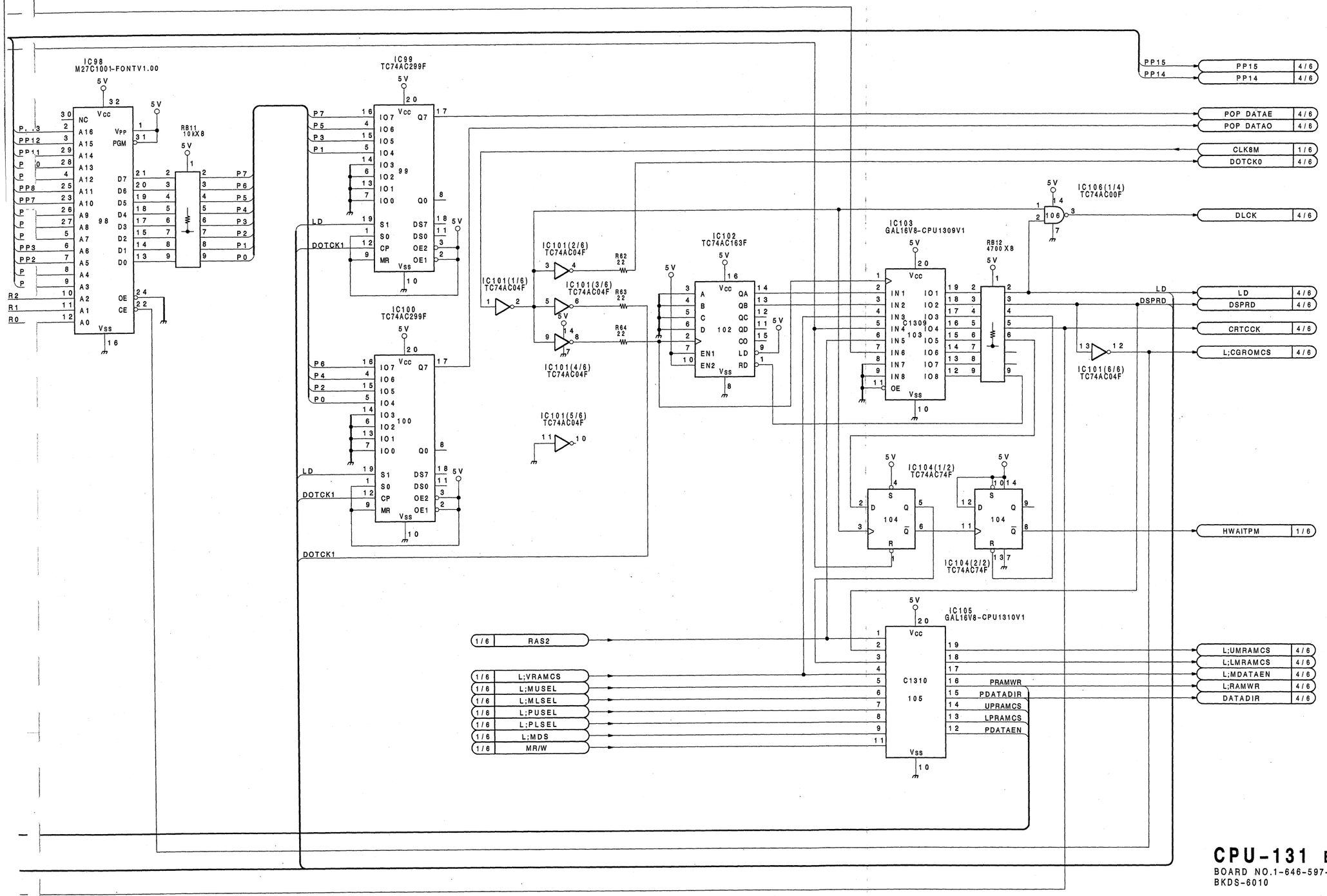

CPU-131 BOARD (5/6)

BOARD NO.1-646-597-12
BKDS-6010

CPU-131(6/6);SYSTEM CONTROL BOARD

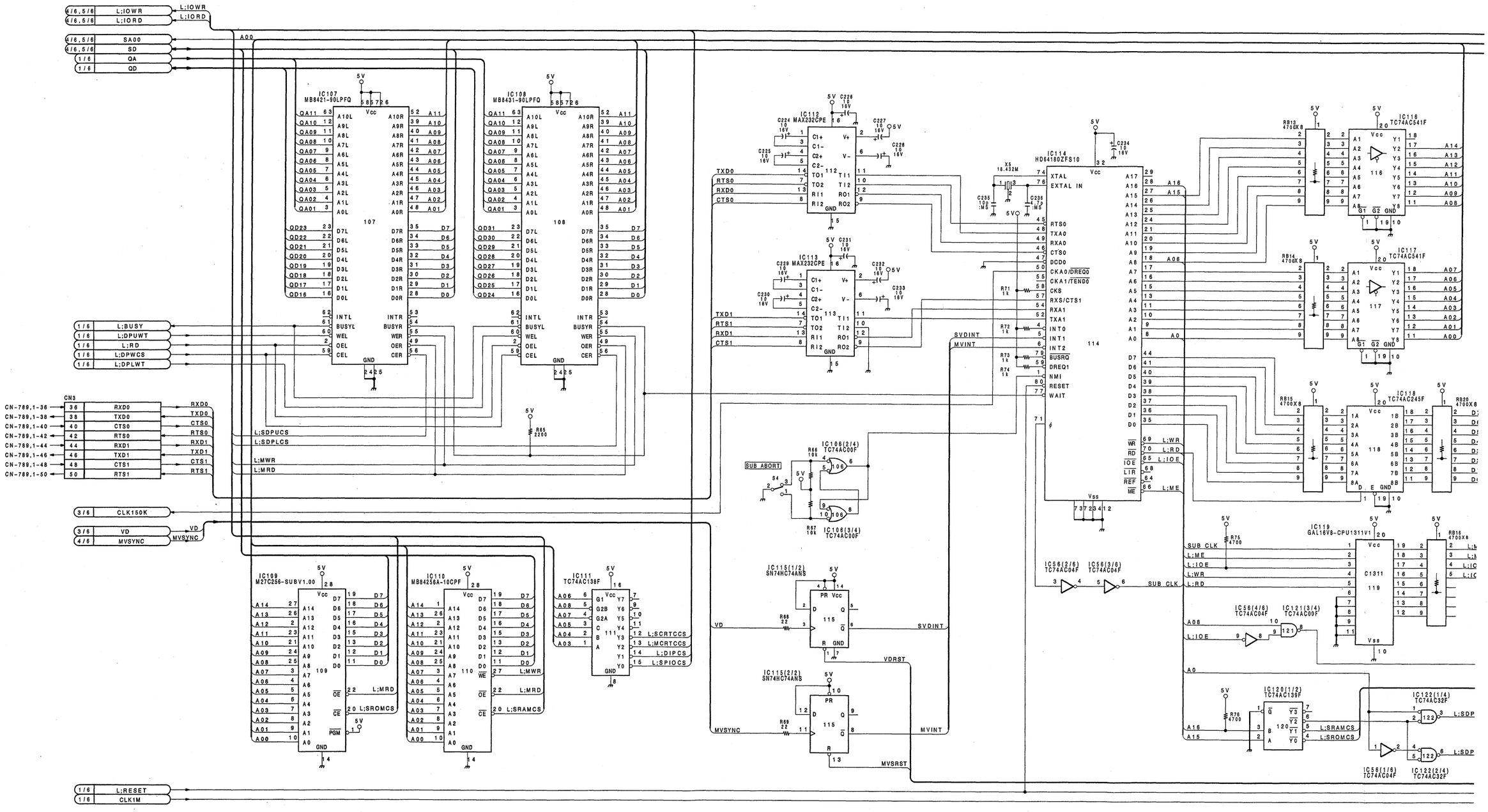

6-8(b)

A | B | C | D | E | F | G | H

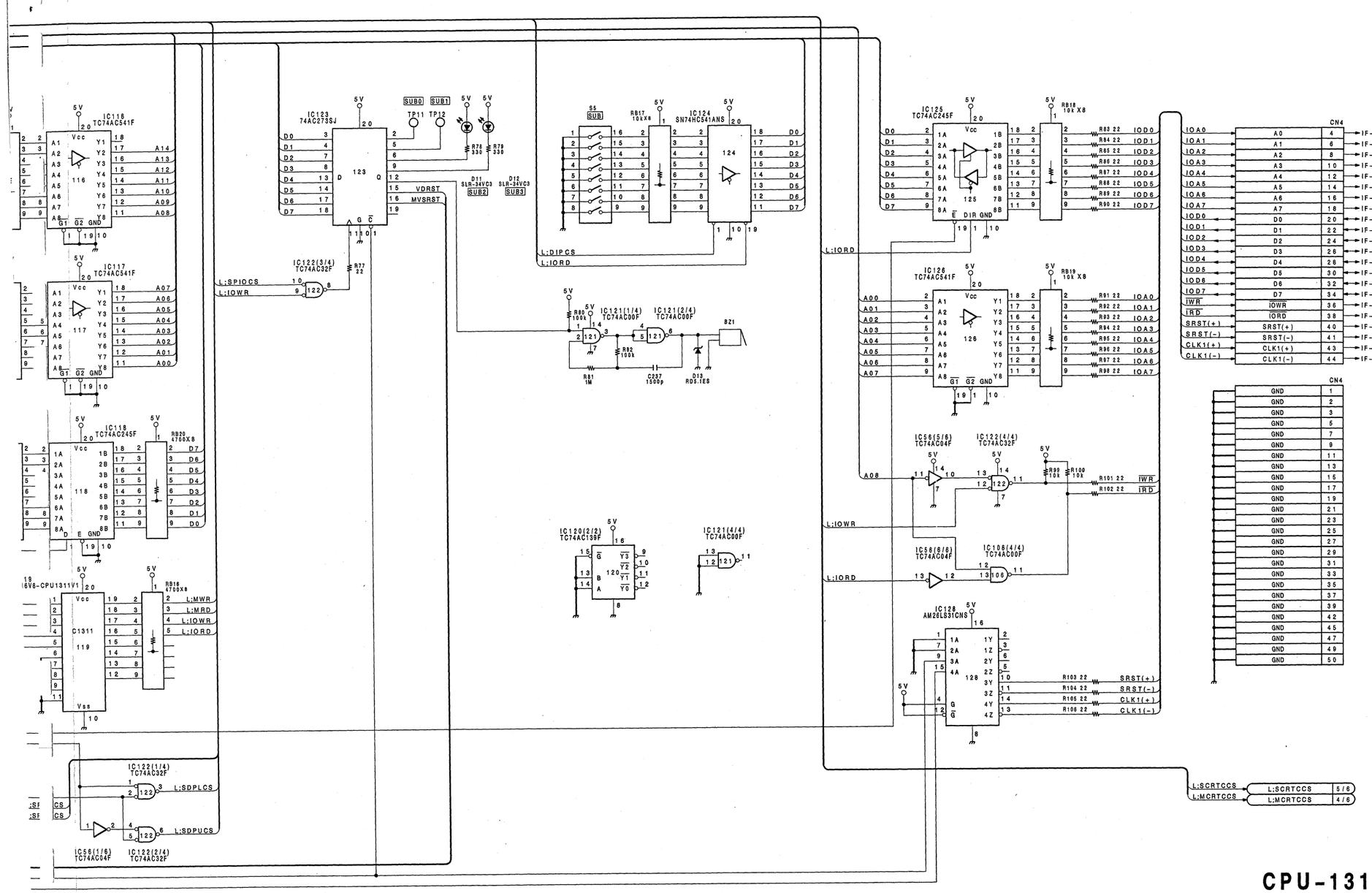

CPU-131 BOARD (6 / 6)

BOARD NO.1-646-597-12
BKDS-6010

CPU-131(1/6);SYSTEM CONTROL BOARD

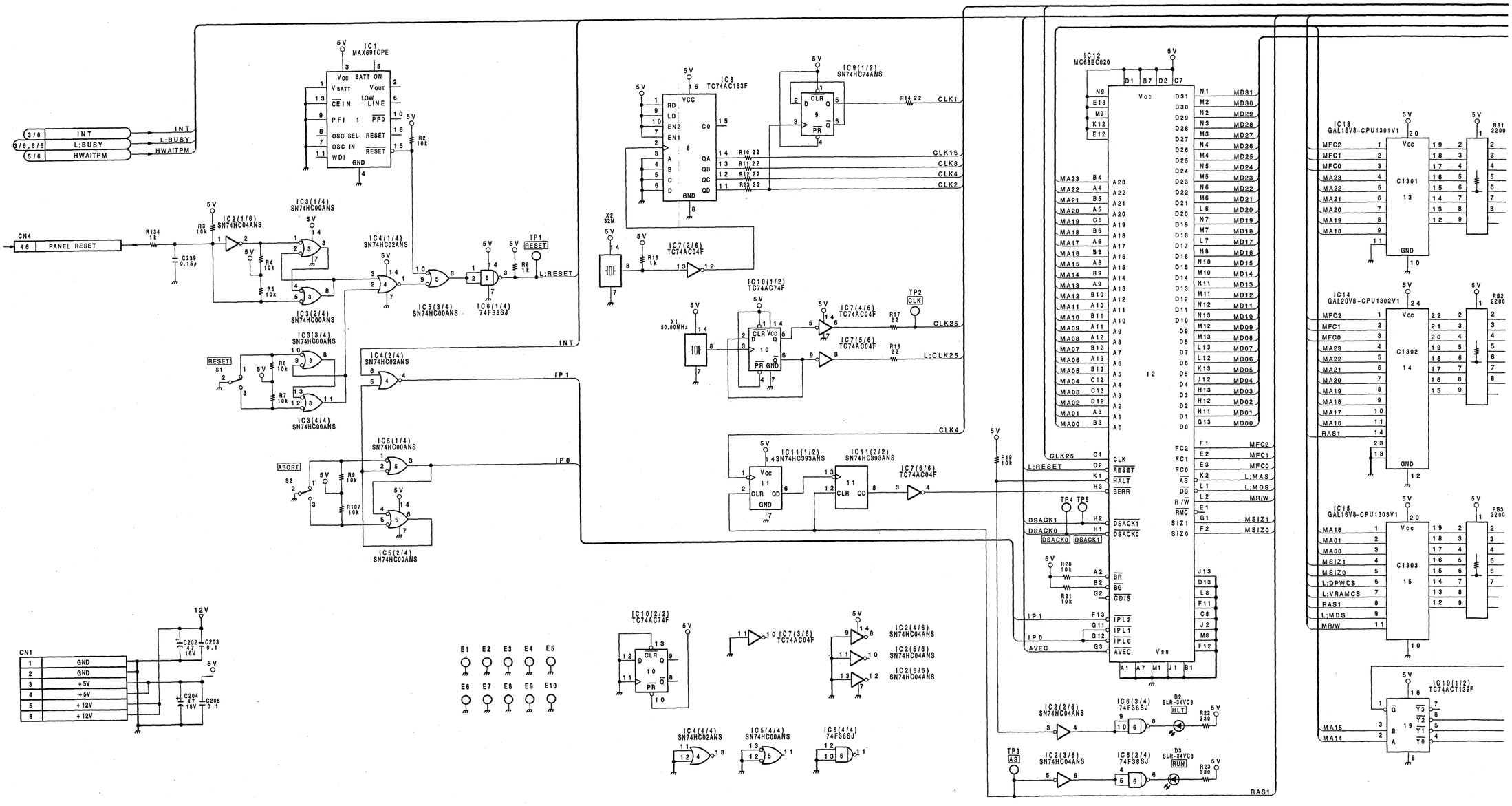

6-3(a)

A | B | C | D | E | F | G | H

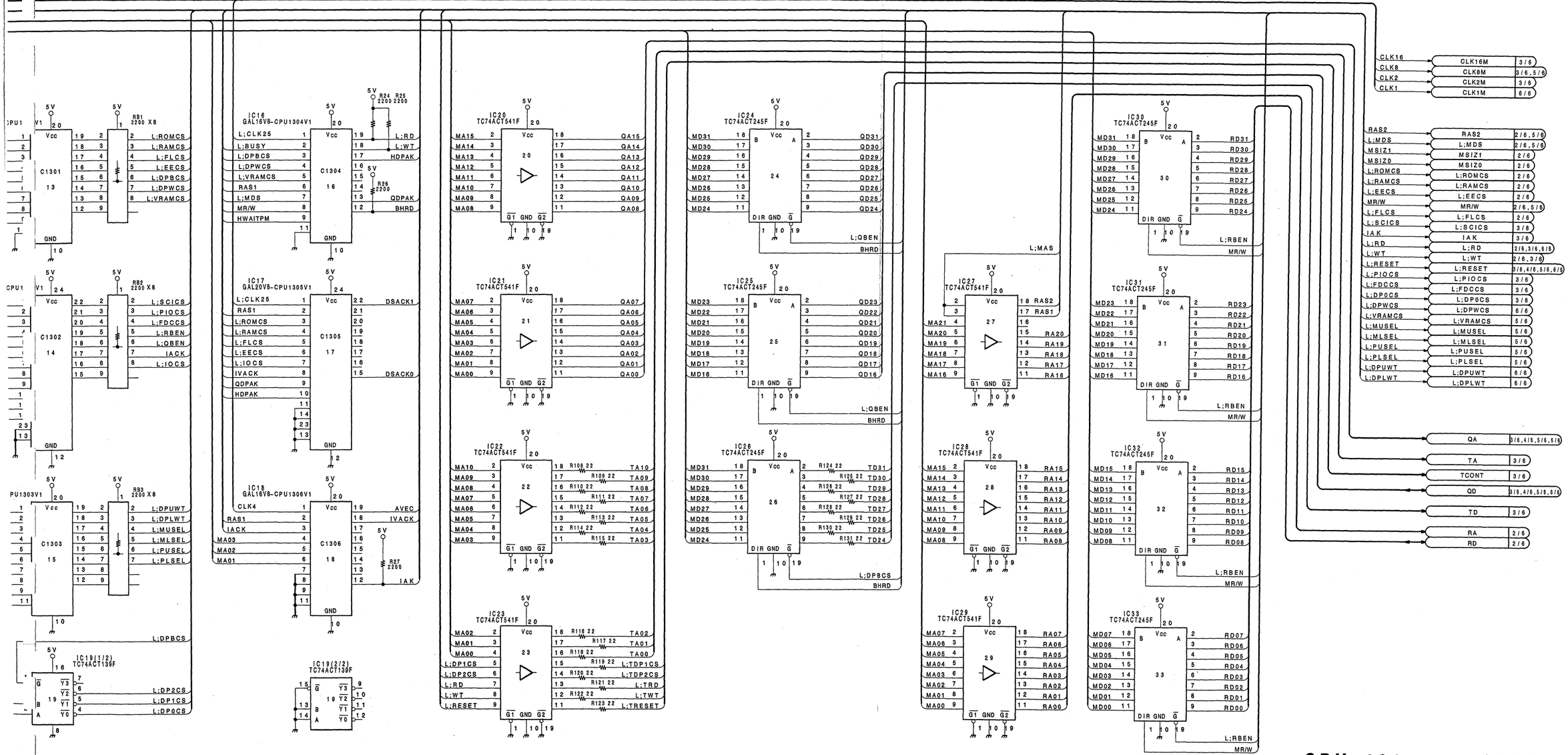

CPU-131 BOARD (1/6)

BOARD NO.1-646-597-11
BKDS-6010

6-3(a)

CPU-131(2/6);SYSTEM CONTROL BOARD

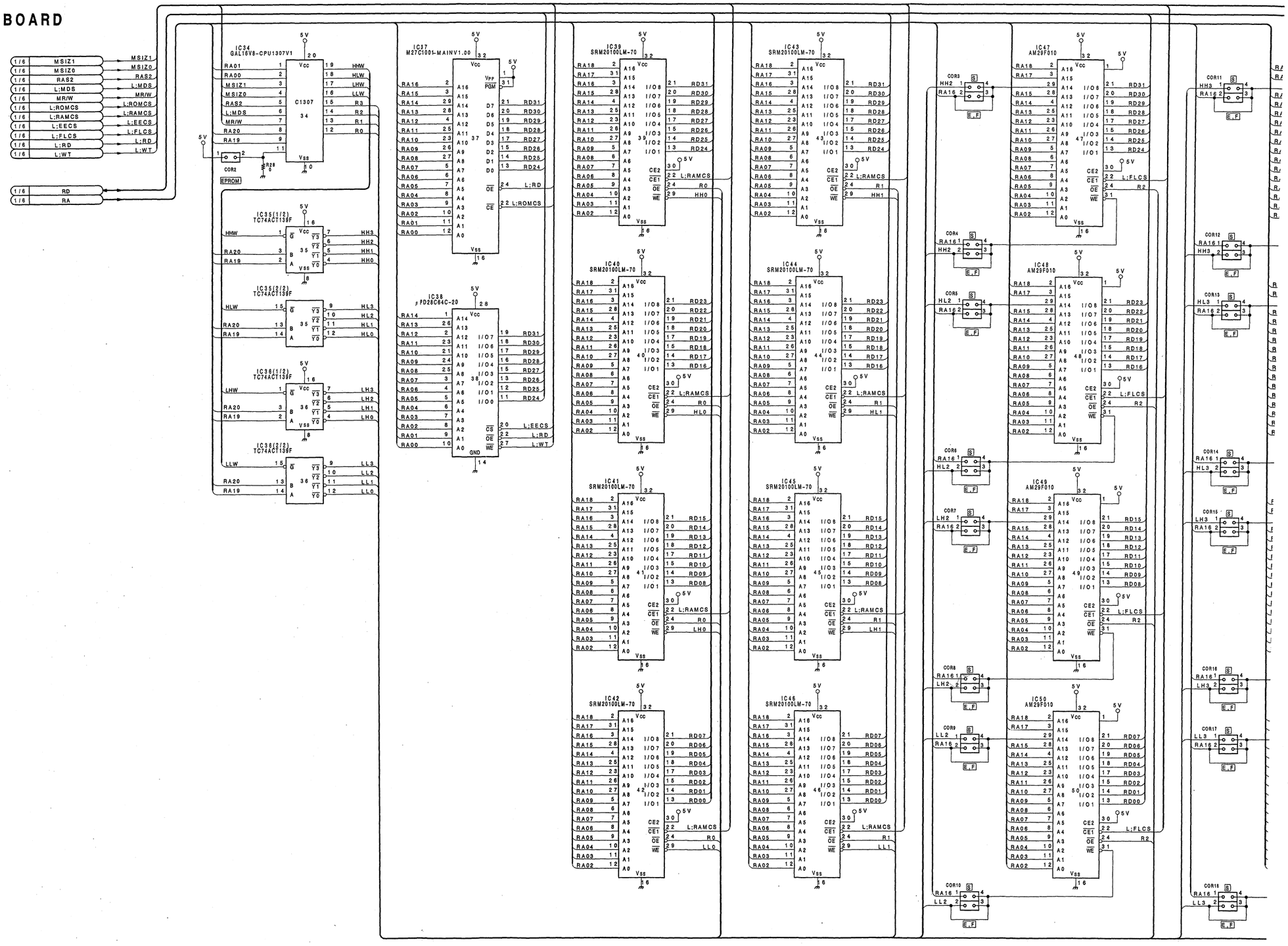

6-4(a)

A B C D E F G H

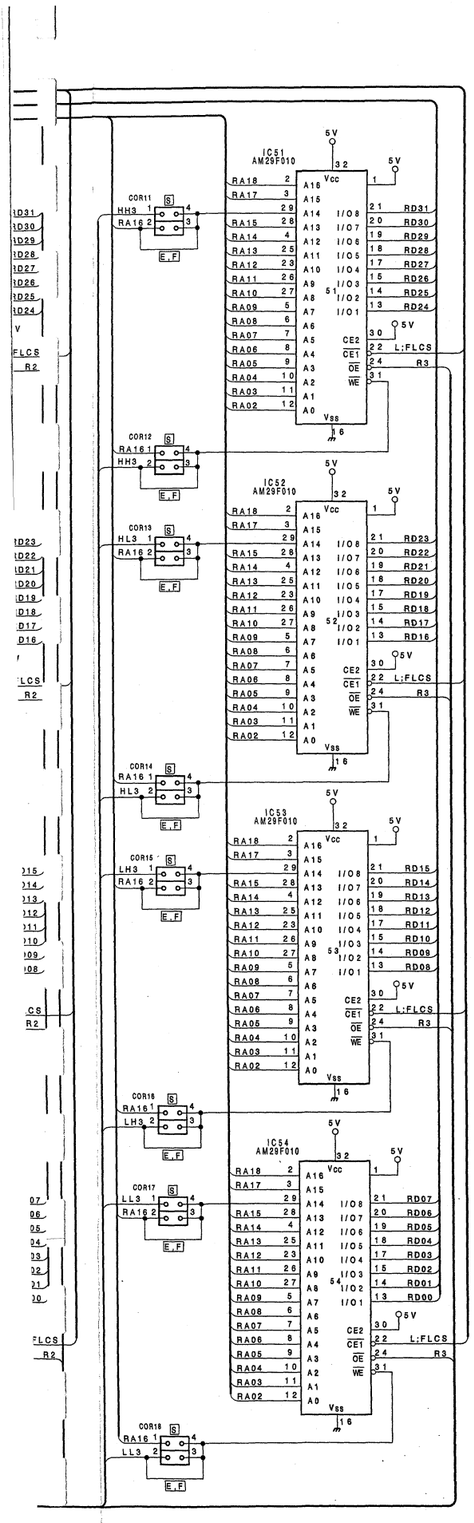

CPU-131 BOARD (2 / 6)

BOARD NO.1-646-597-11
BKDS-6010

CPU-131(3/6);SYSTEM CONTROL BOARD

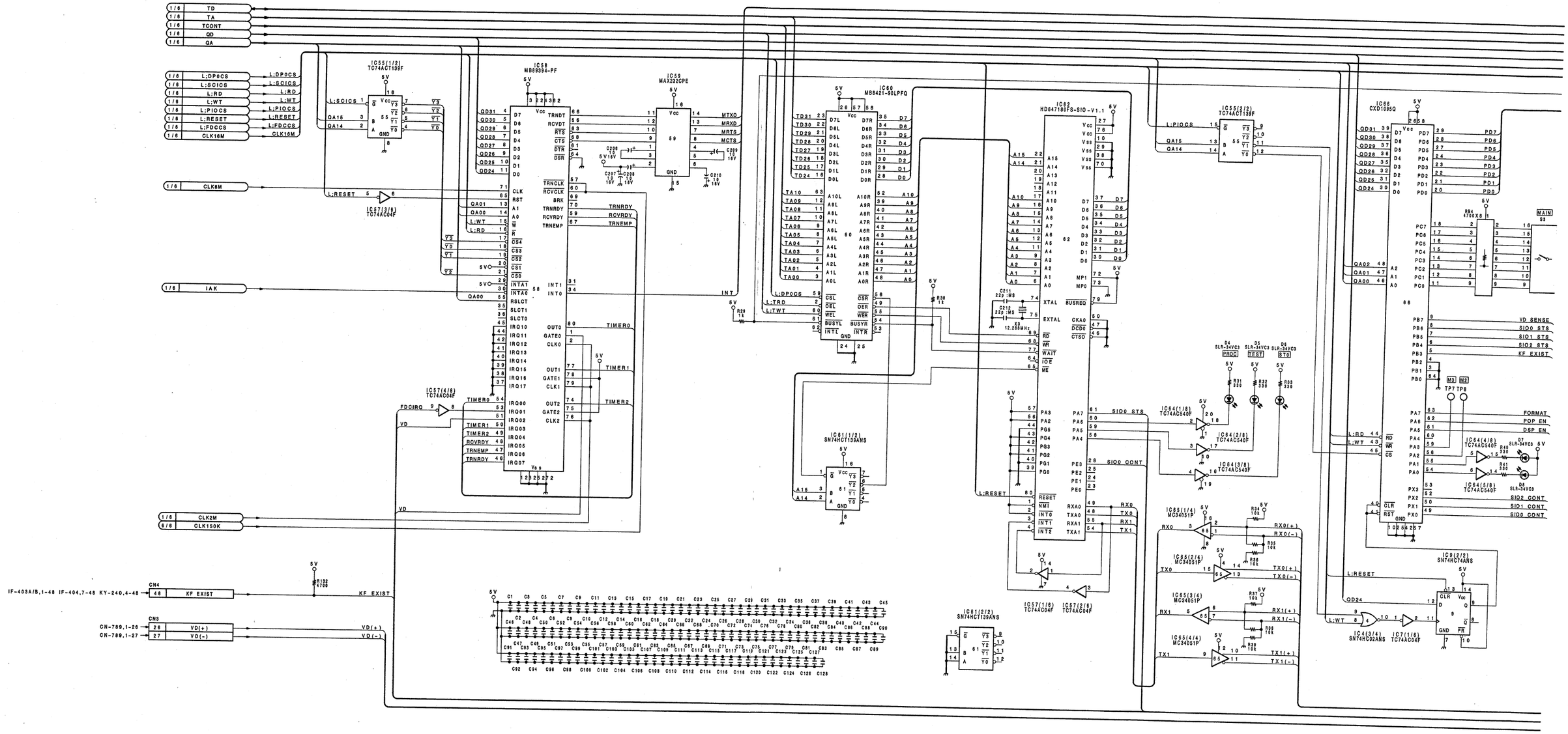

CPU-131 BOARD (3 / 6)

BOARD NO.1-646-597-11
BKDS-6010

6-5(a)

CPU-131(4/6);SYSTEM CONTROL BOARD

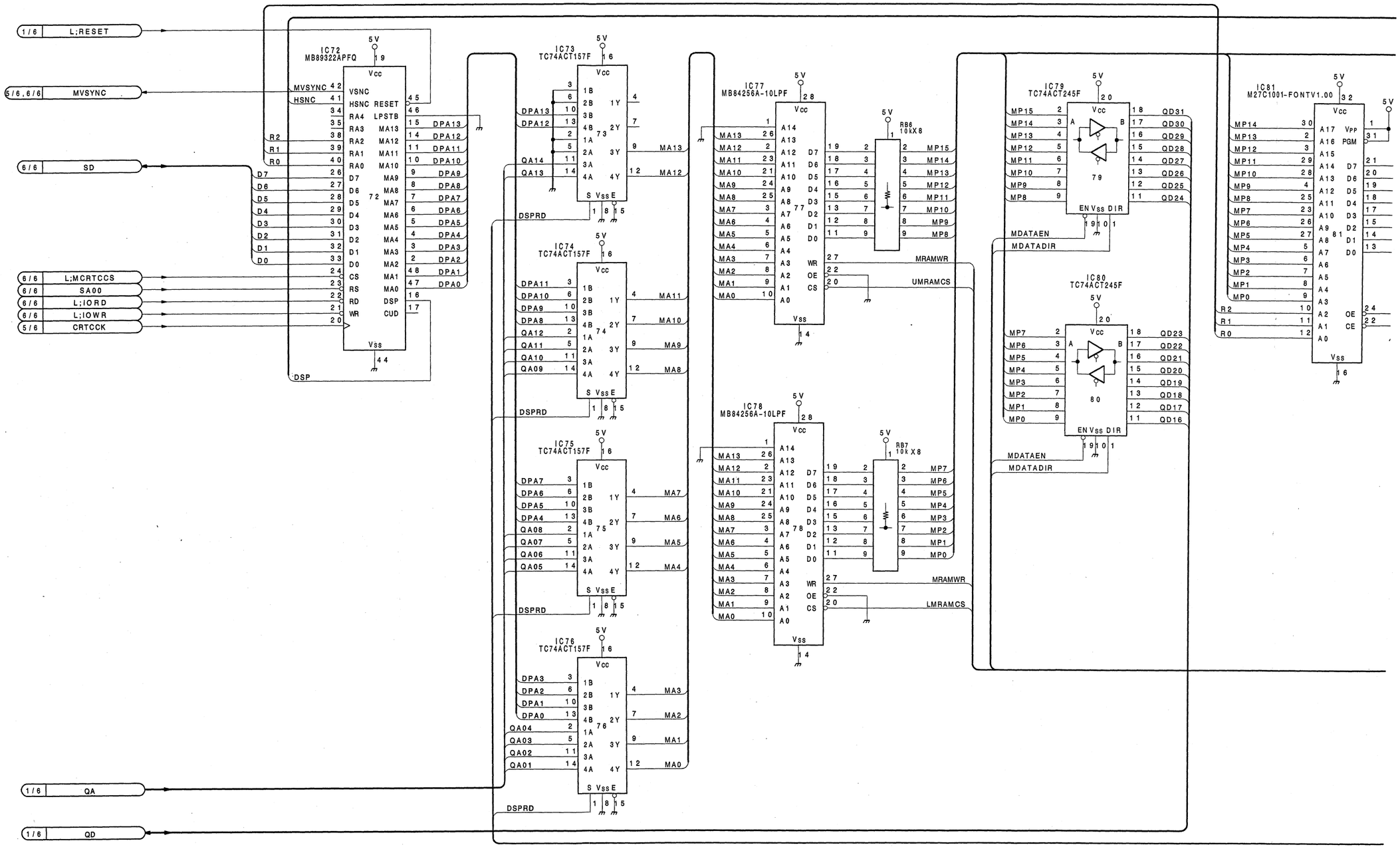

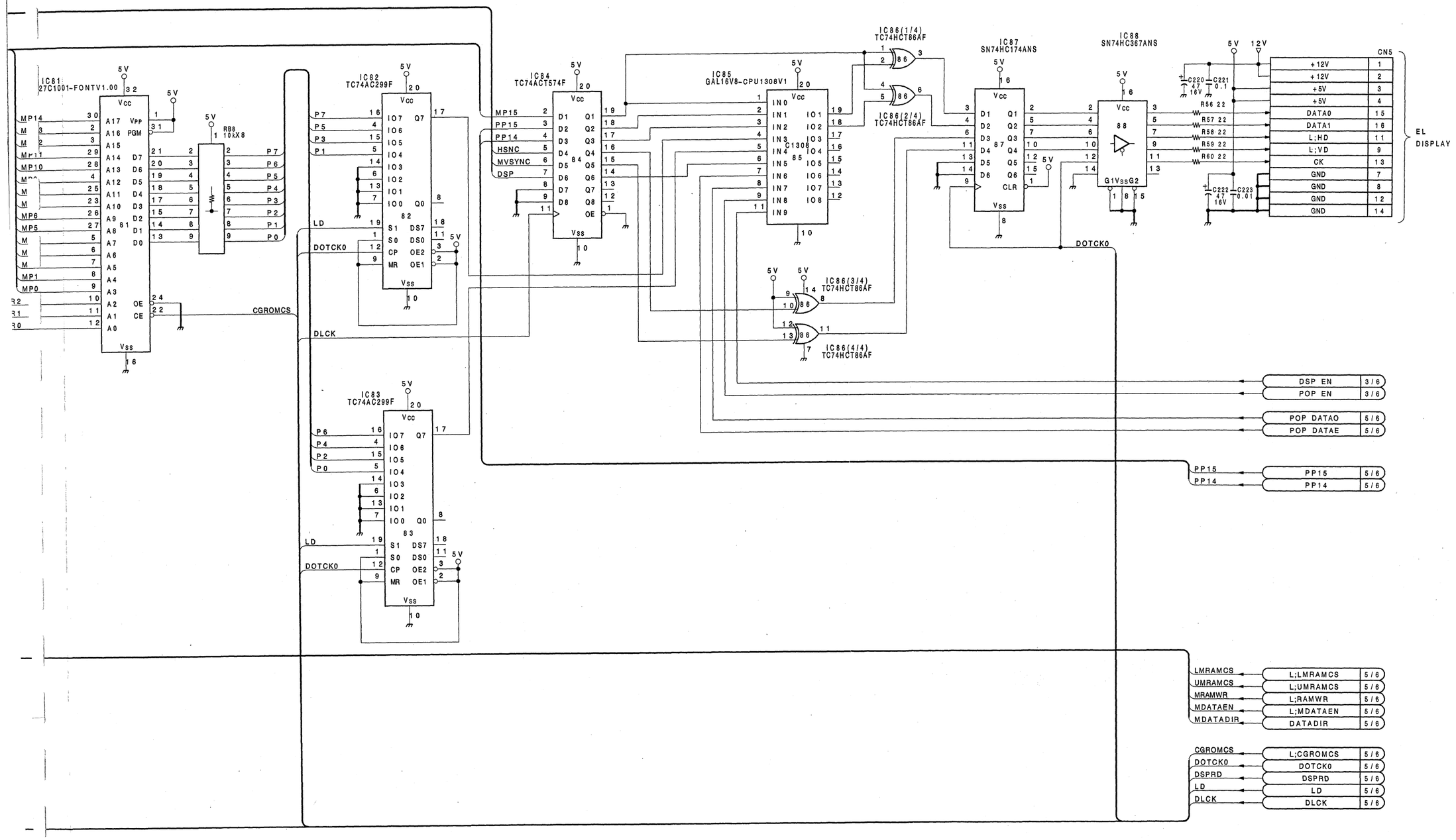

CPU-131 BOARD (4/6)

BOARD NO.1-646-597-11
BKDS-6010

CPU-131(5/6);SYSTEM CONTROL BOARD

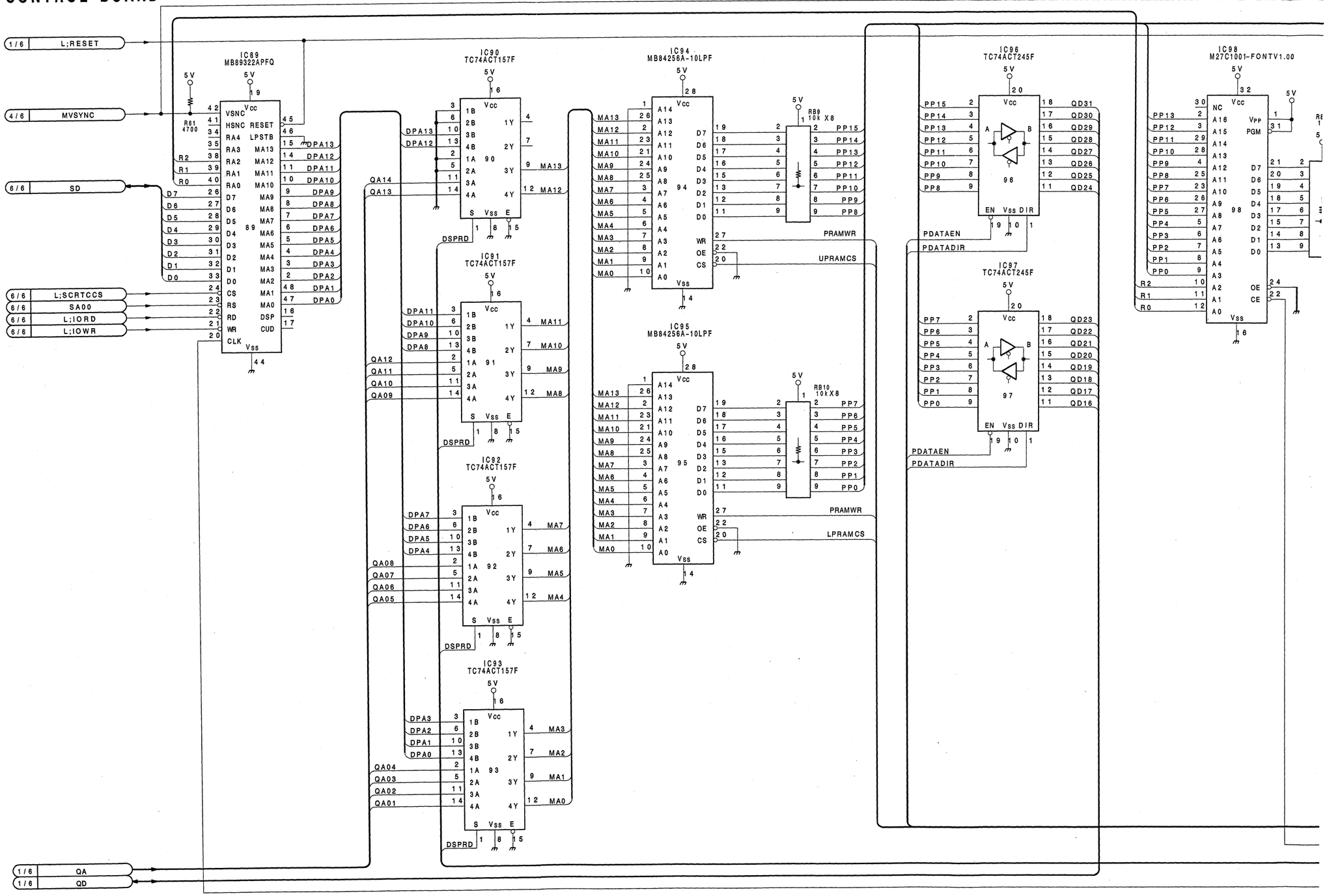

6-7(a)

A B C D E F G H

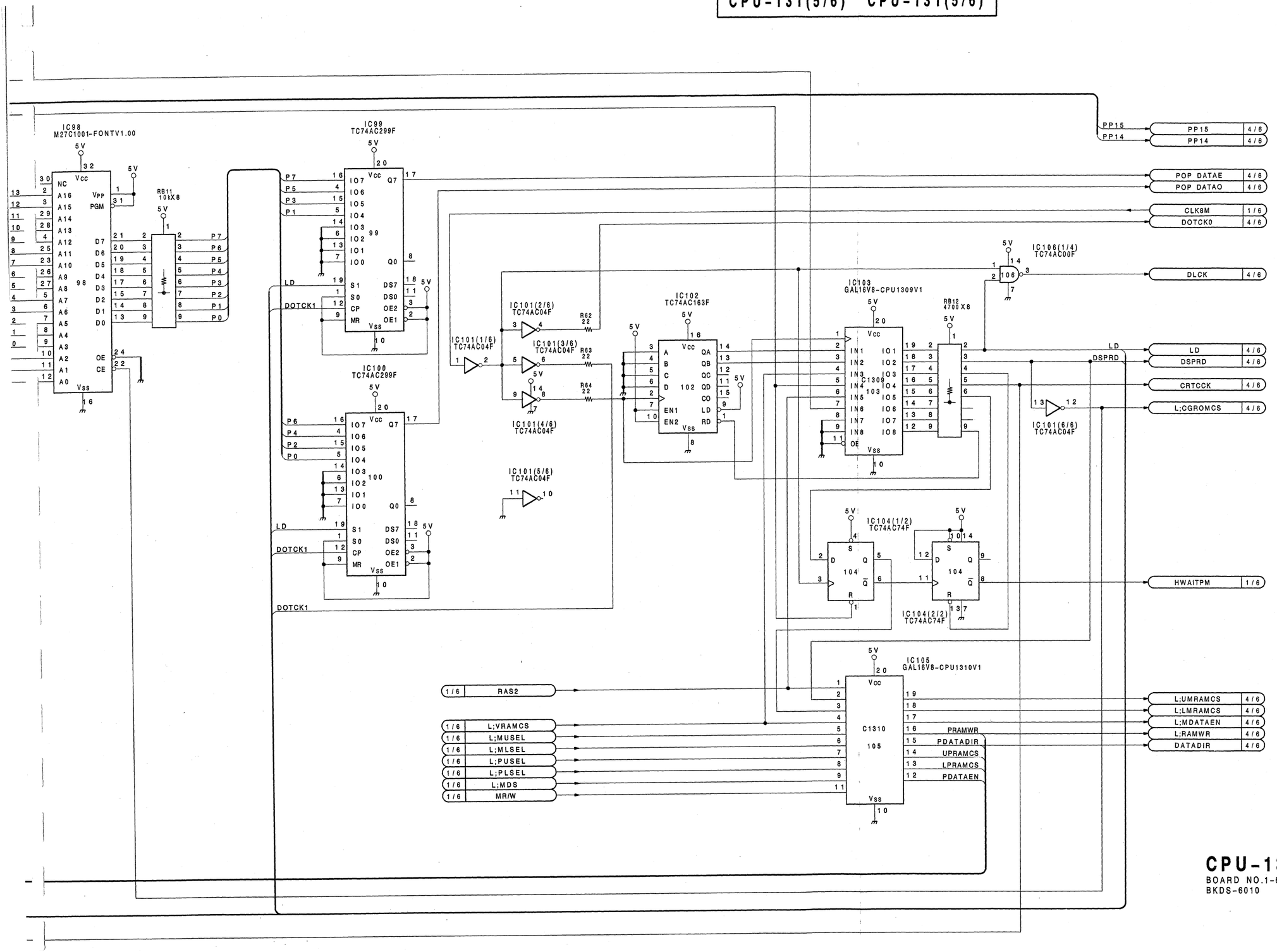

CPU-131 BOARD (5 / 6)

BOARD NO.1-646-597-11
BKDS-6010

CPU-131(6/6);SYSTEM CONTROL BOARD

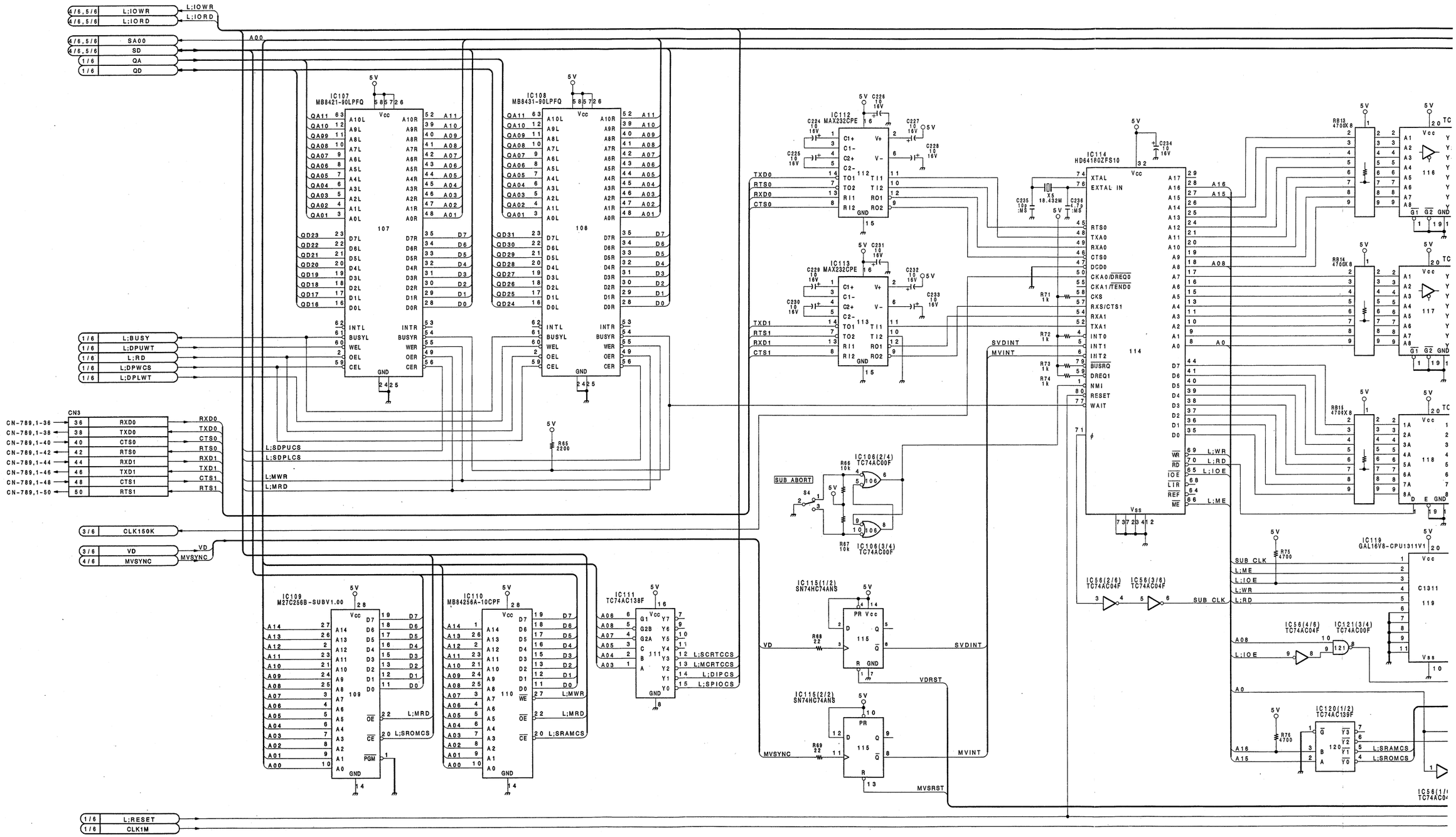

A B C D E F G H

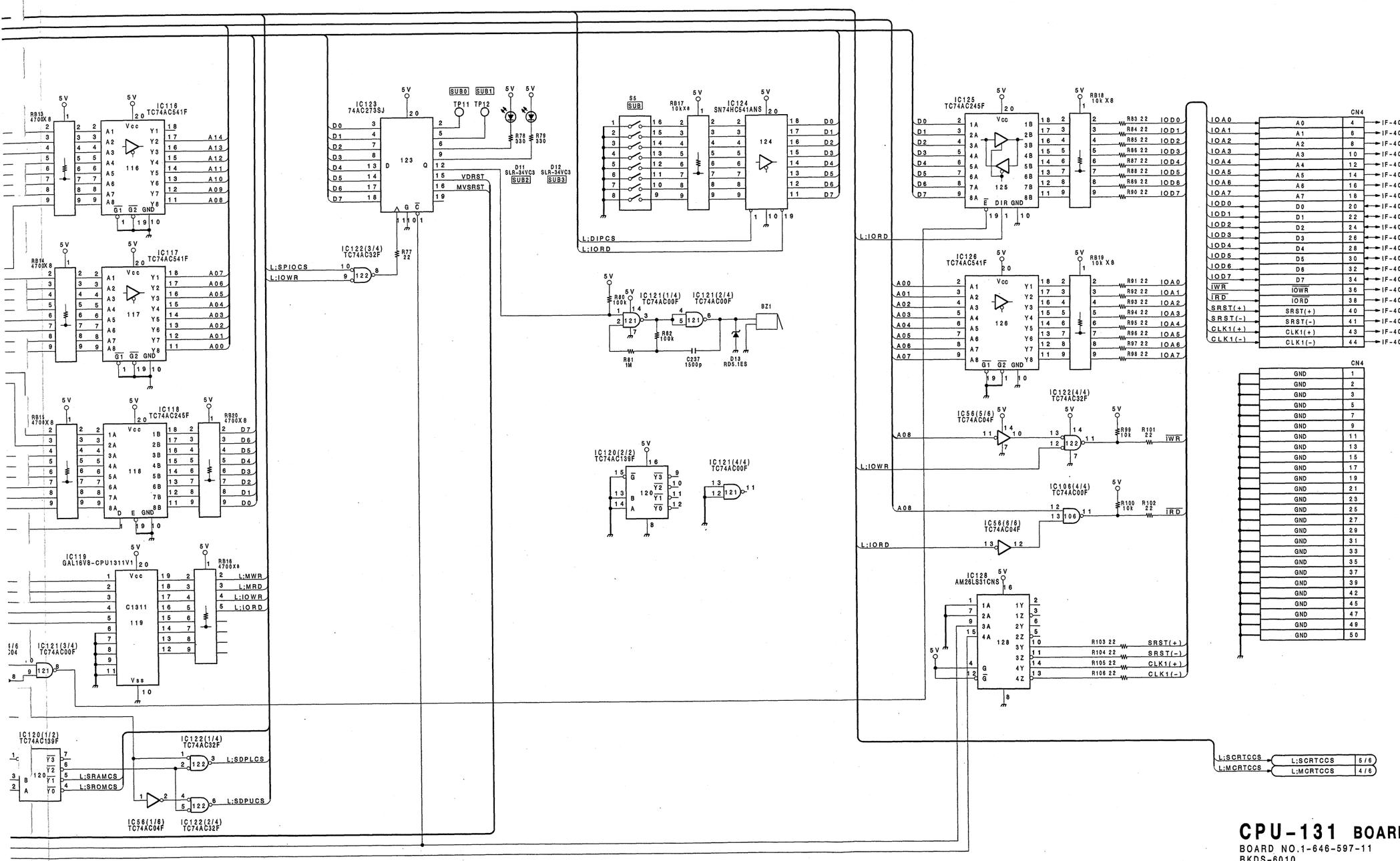

CPU-131 BOARD (6 / 6)

BOARD NO.1-646-597-11
BKDS-6010

IF-403(A,B)(1/2);SWITCH INTERFACE BOARD (FOR KY-239)

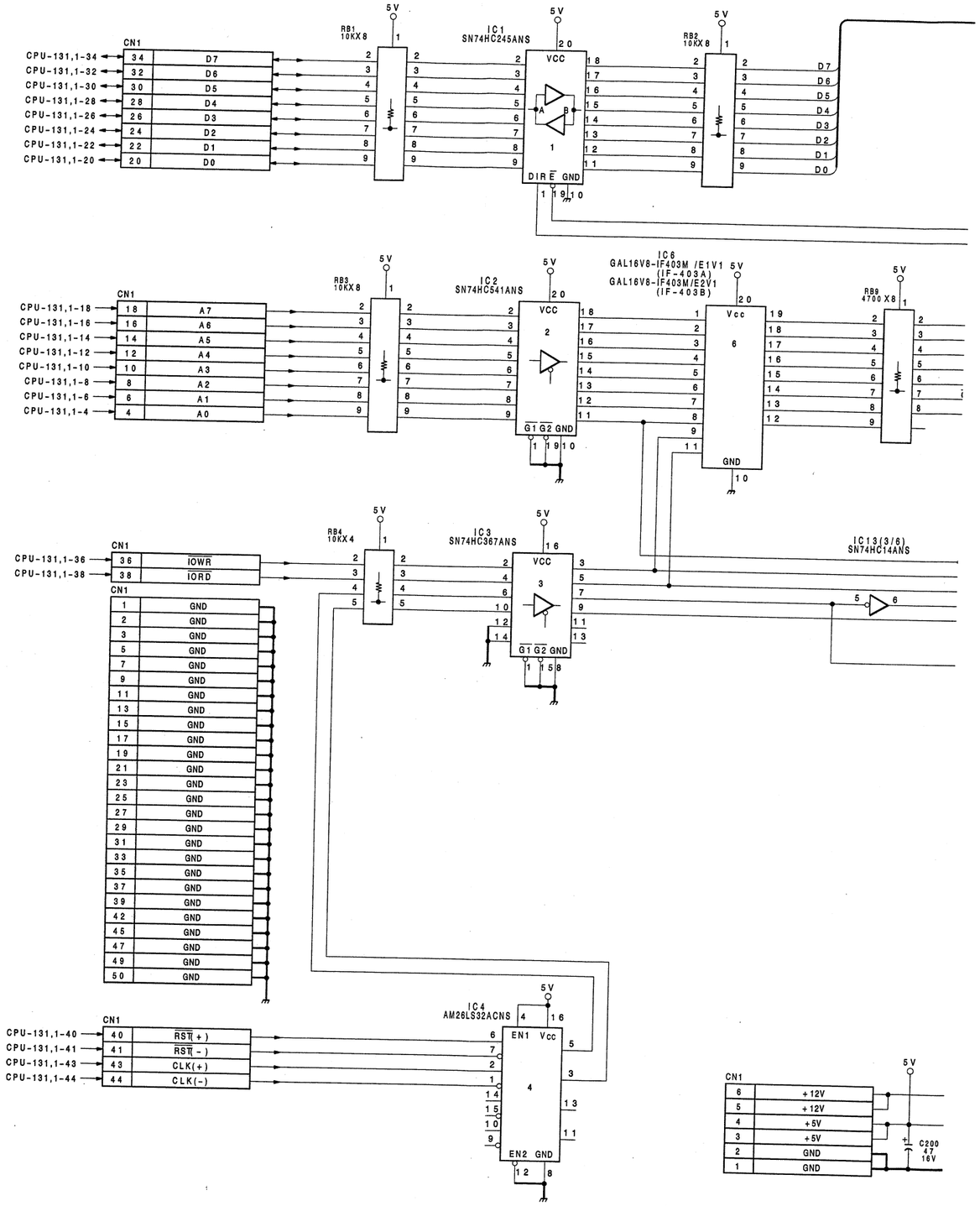

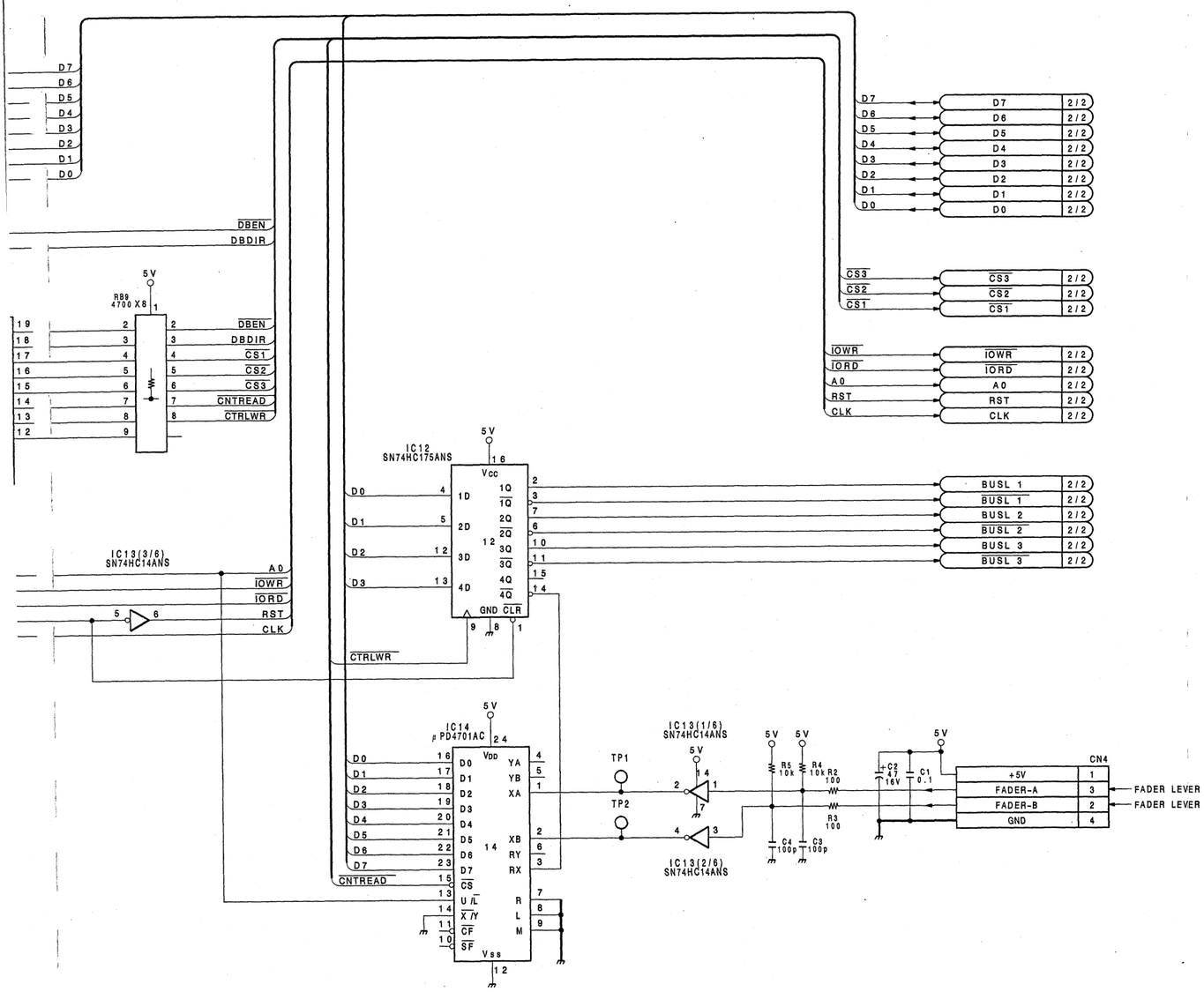

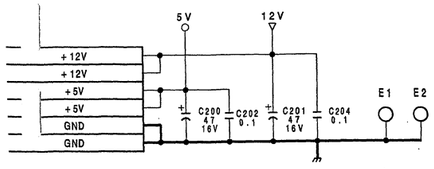

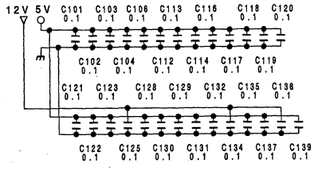

IF-403(A,B) BOARD (1/2)

BOARD NO.1-646-588-11
BKDS-6010

IF-403(A,B)(2/2);SWITCH INTERFACE BOARD(FOR KY-239)

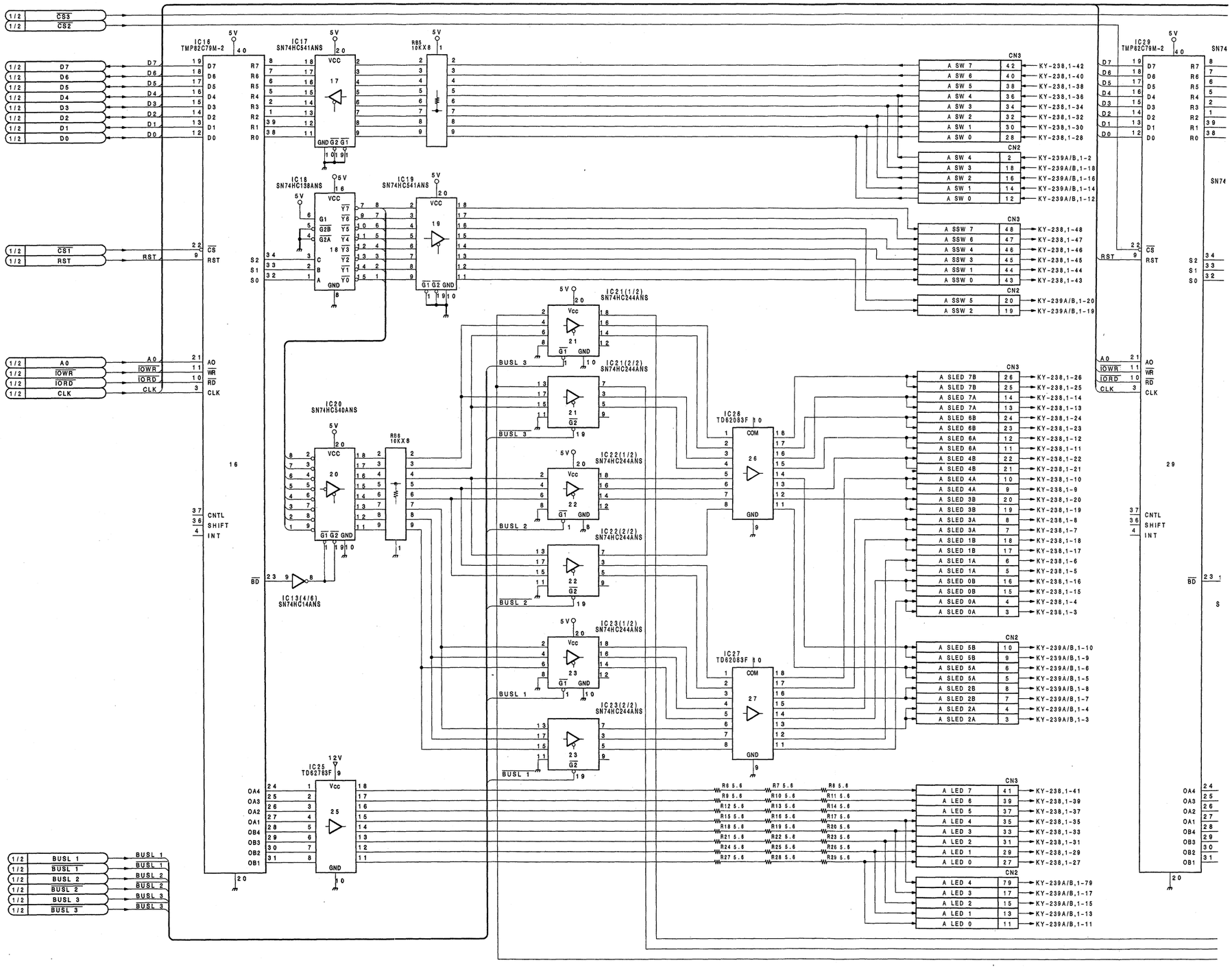

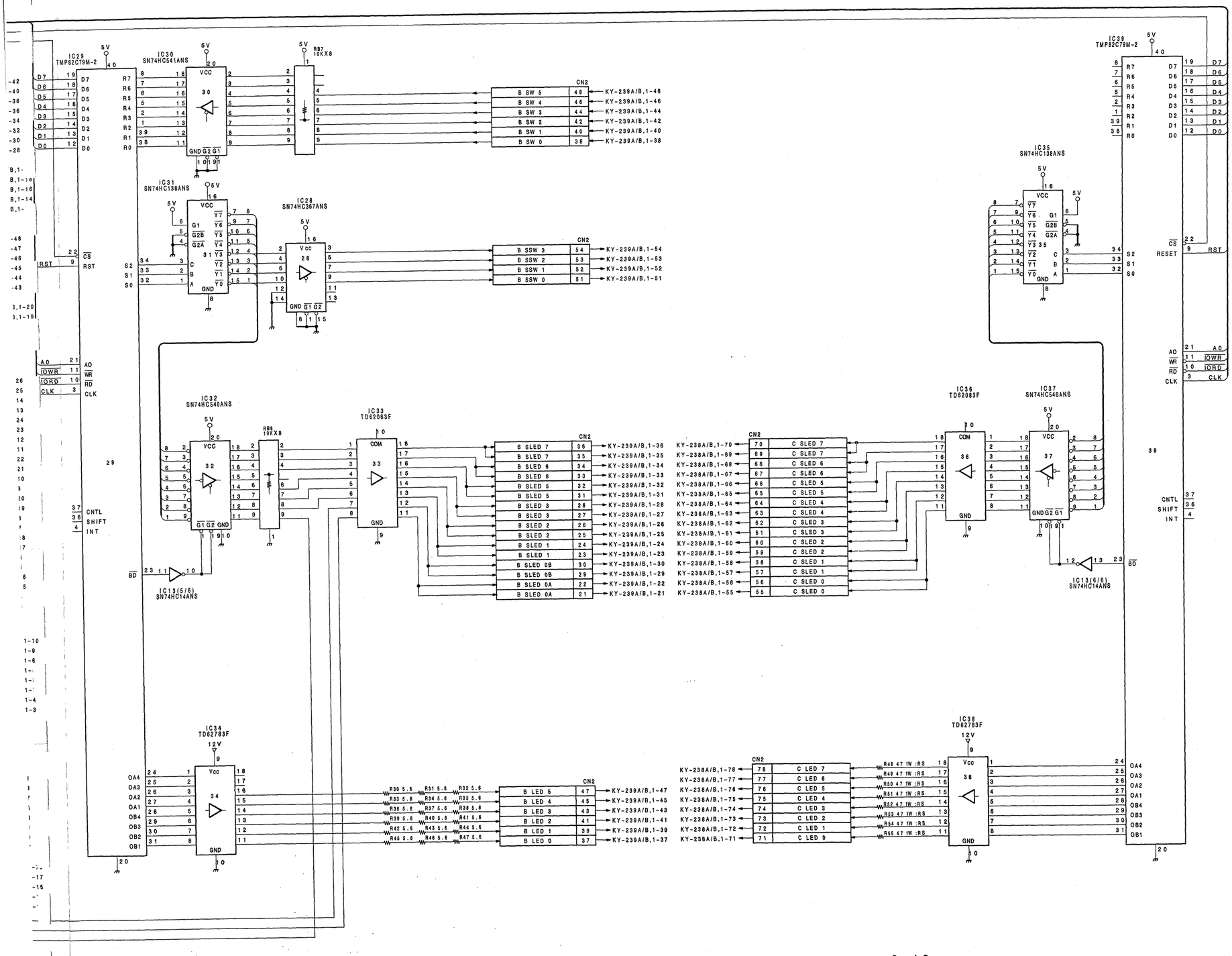

IF-403(A,B) BOARD (2/2)

BOARD NO.1-646-588-11
BKDS-6010

IF-404(1/3);SWITCH INTERFACE BOARD (FOR KY-243)

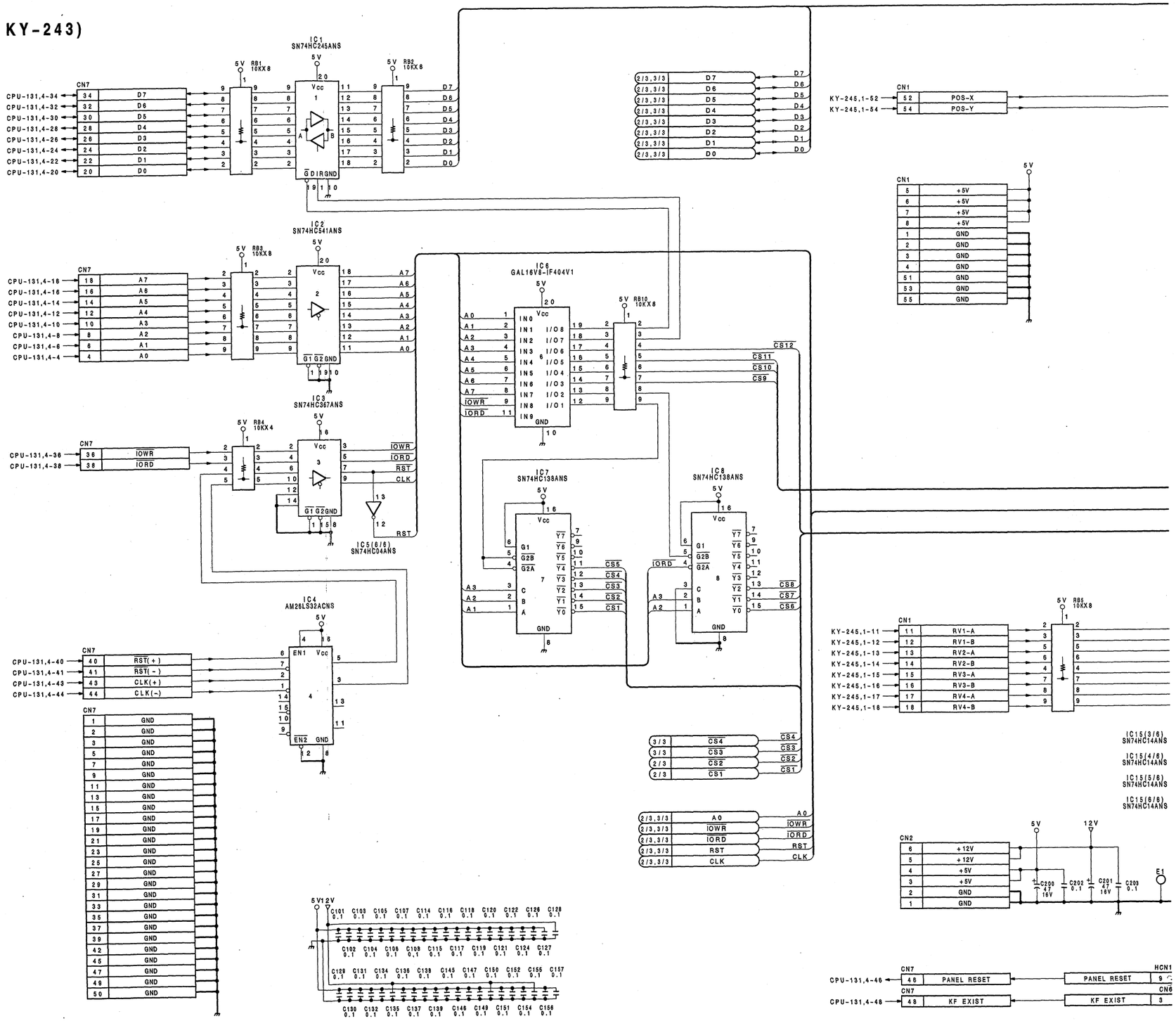

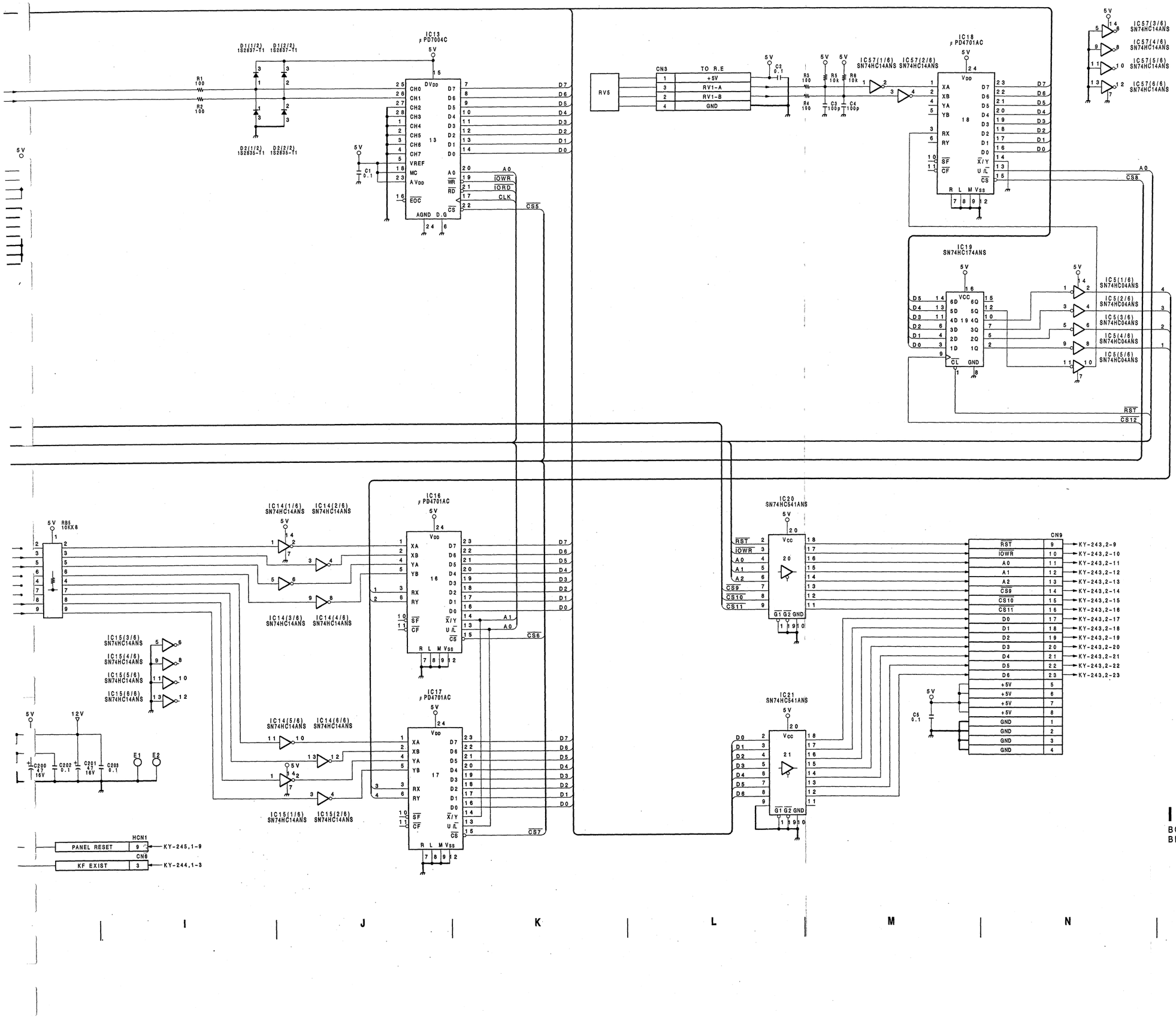

IF-404 BOARD (1/3)

BOARD NO.1-646-589-11
BKDS-6010

IF-404(2/3);SWITCH INTERFACE BOARD(FOR KY-243)

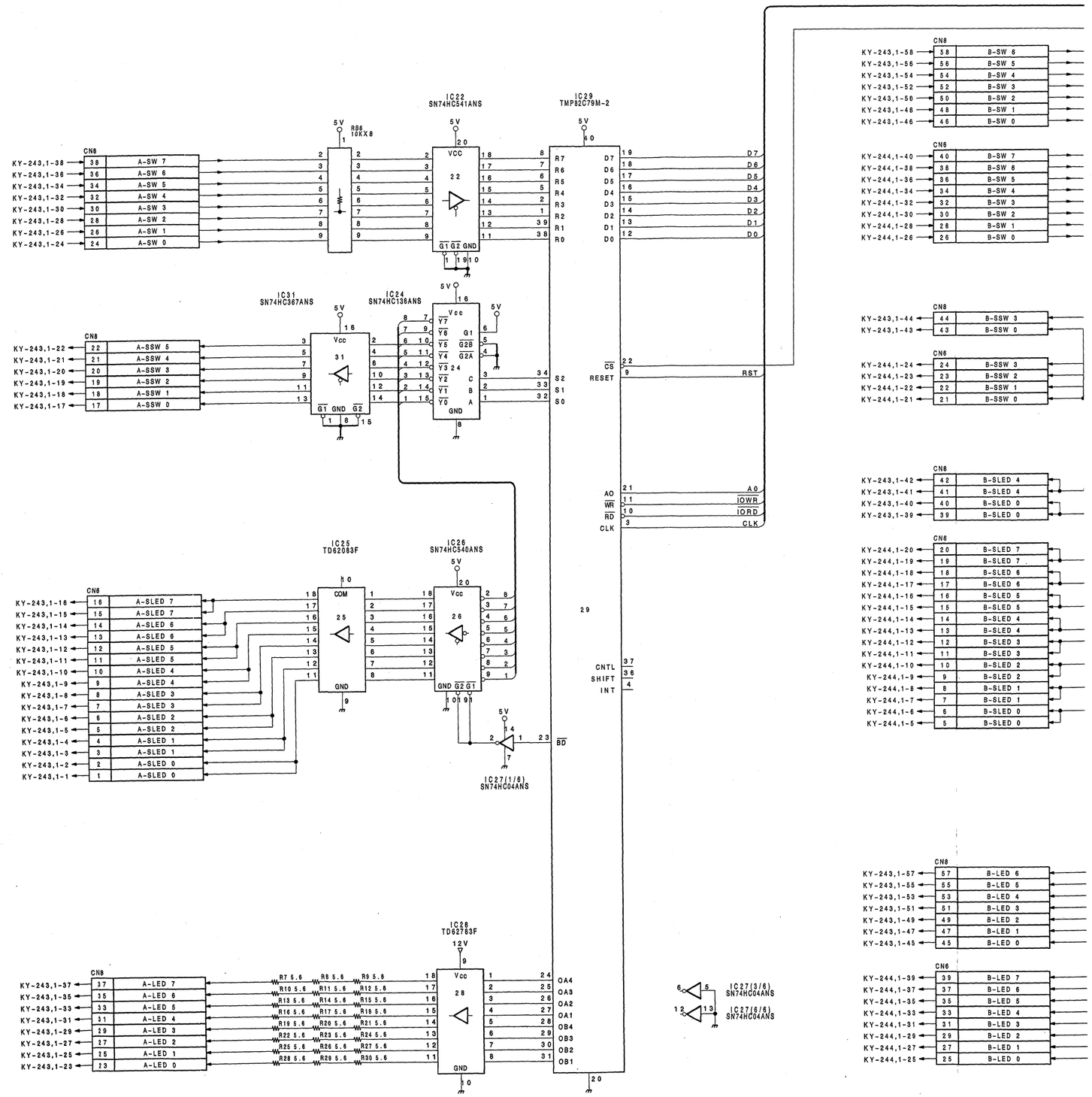

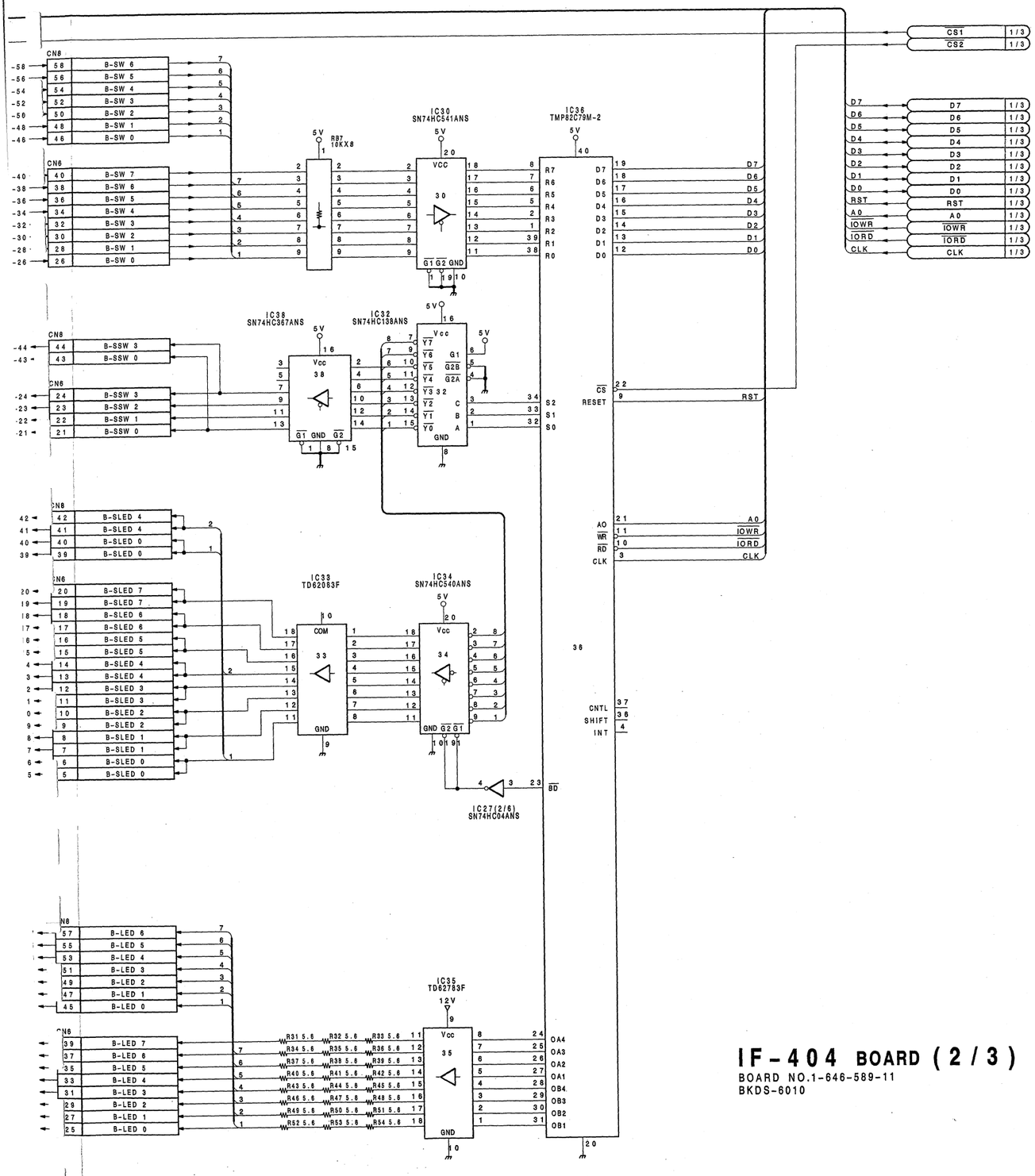

IF-404 BOARD (2/3)

BOARD NO.1-646-589-11
BKDS-6010

IF-404(3/3);SWITCH INTERFACE BOARD(FOR KY-243)

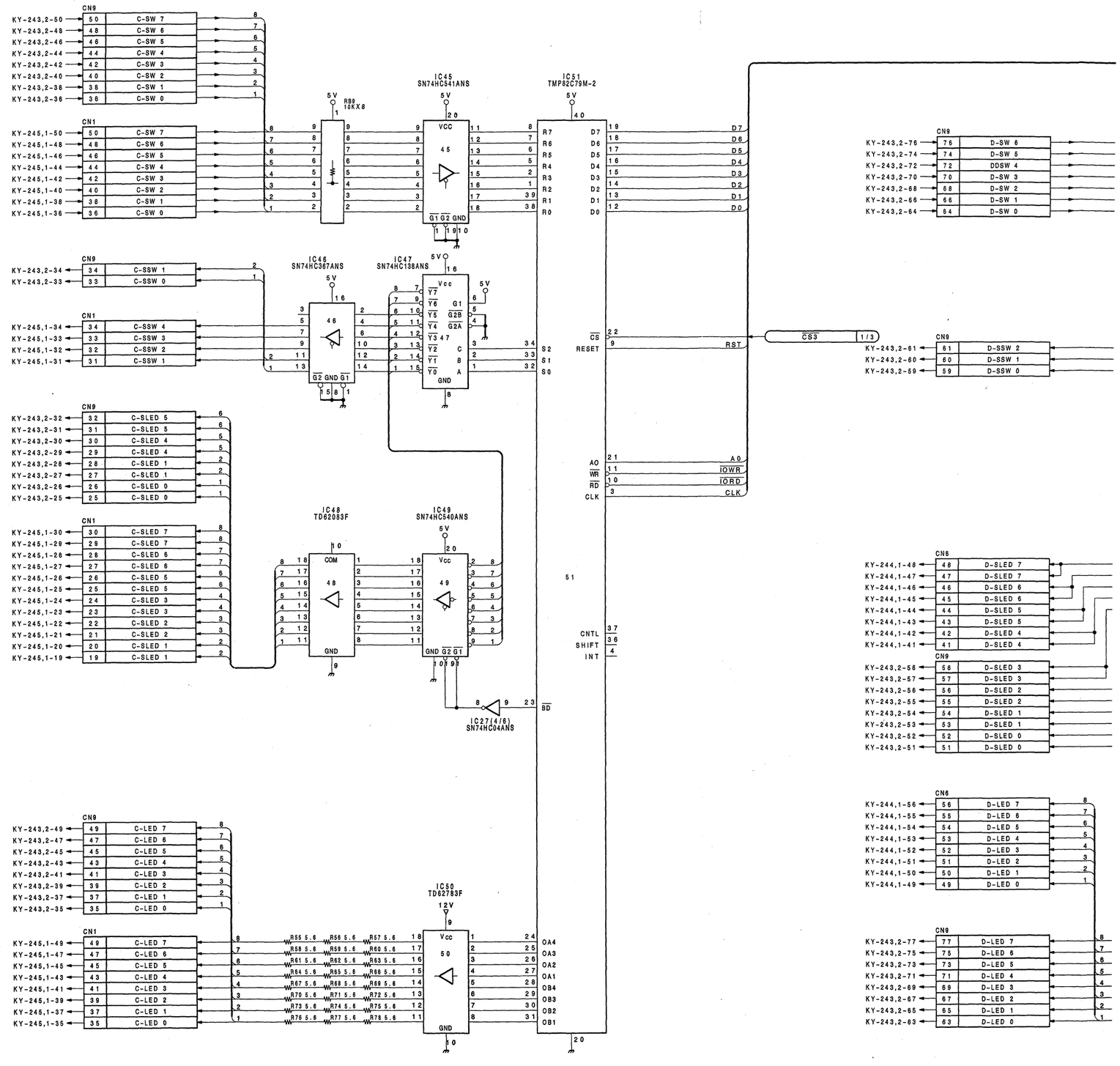

A B C D E F G H

IF-404(3/3)

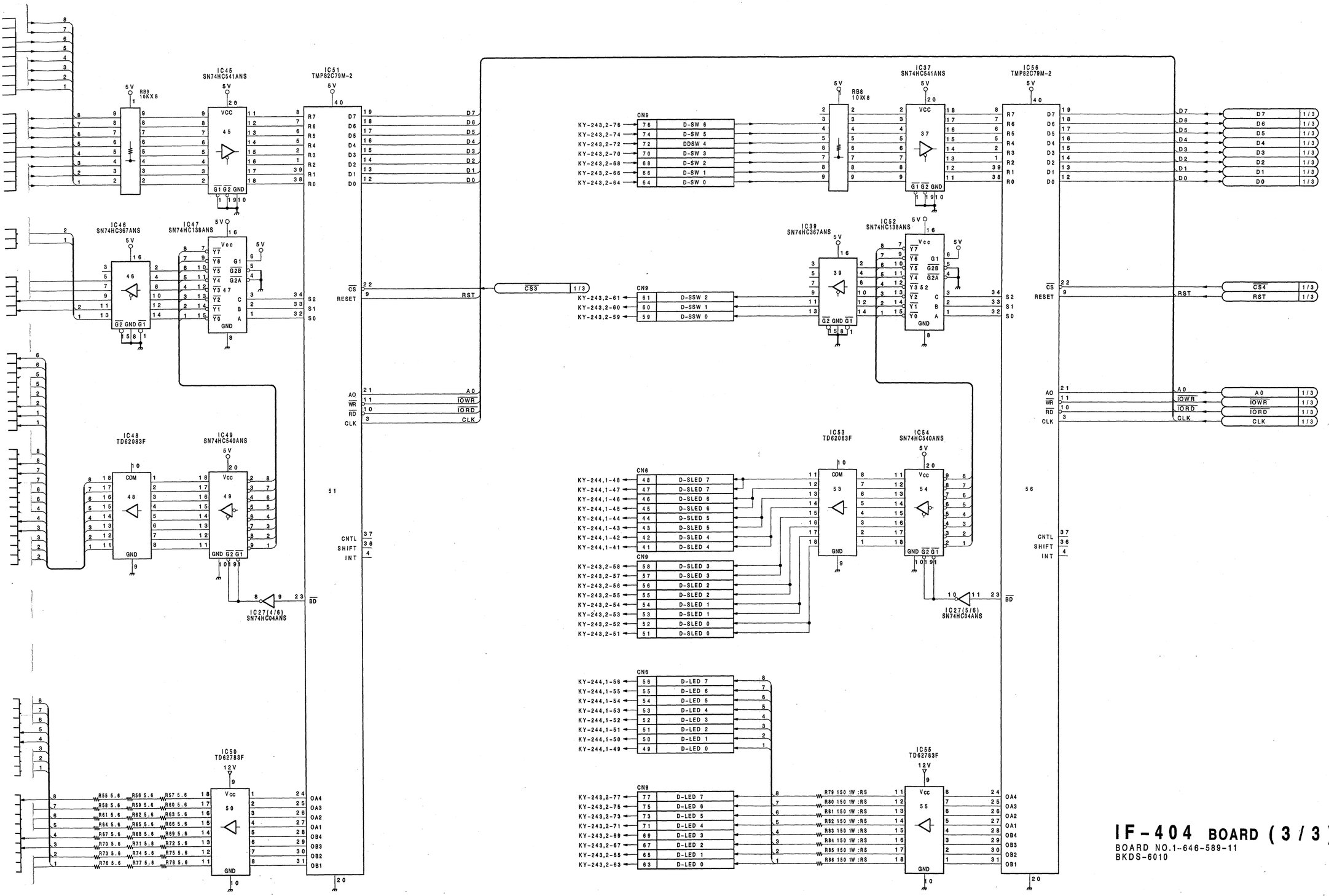

IF-404 BOARD (3/3)

BOARD NO.1-646-589-11
BKDS-6010

IF-418(BKDS-6050);INTERFACE BOARD

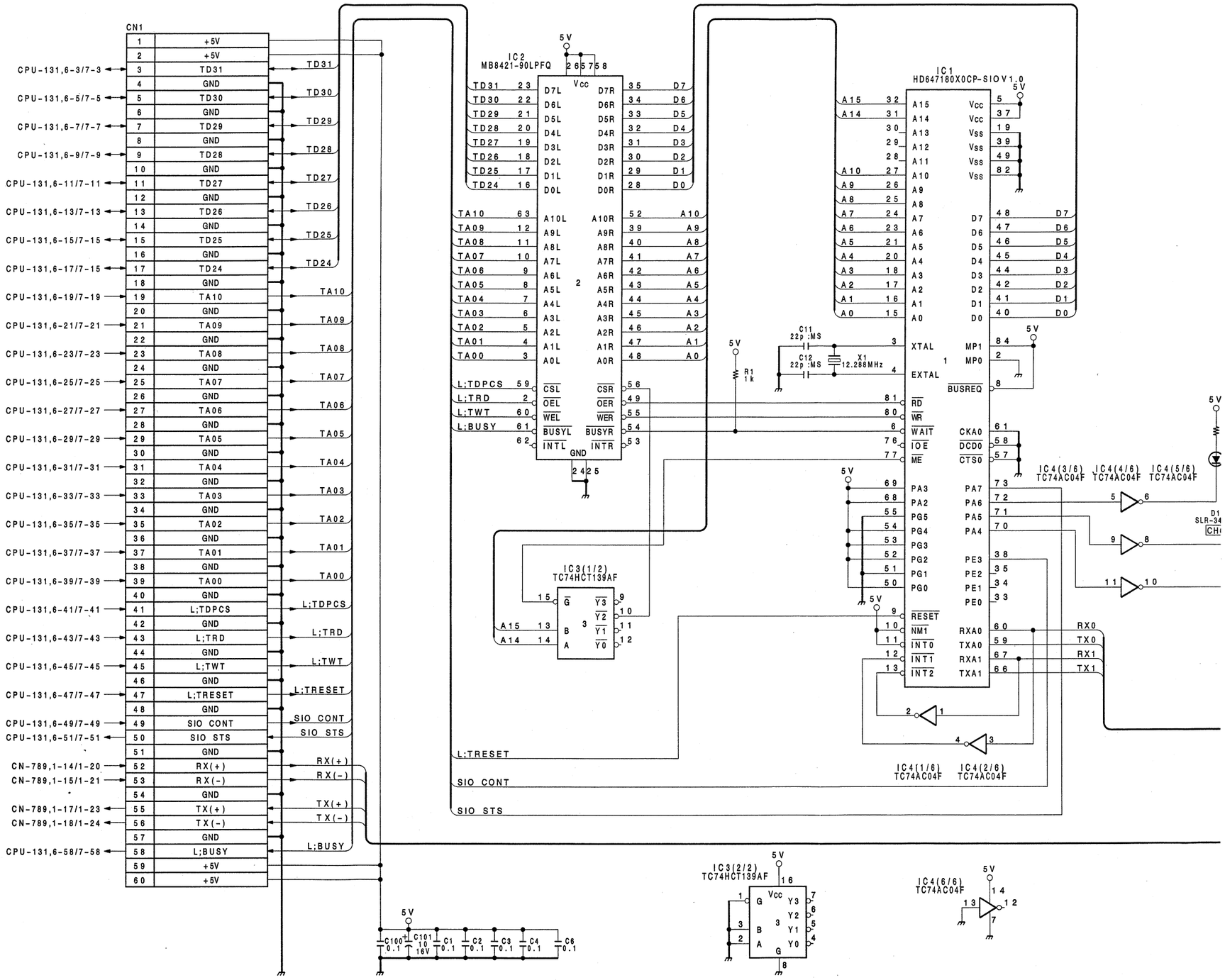

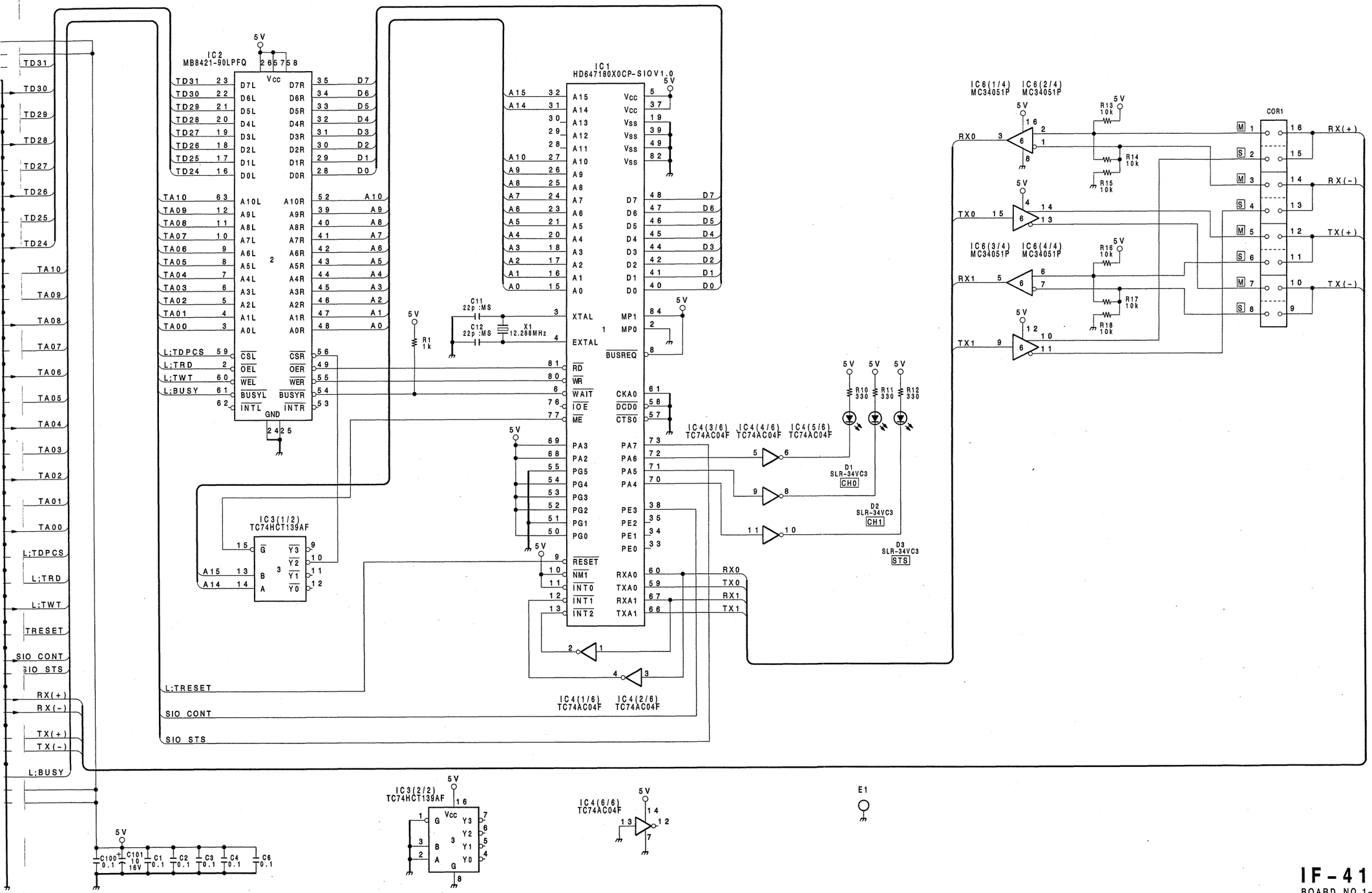

IF-418 BOARD

BOARD NO.1-646-590-11
BKDS-6050

KY-238;SWITCH BOARD

	CN1		
IF-403,3-42	42	A-SW 7	8
IF-403,3-40	40	A-SW 6	7
IF-403,3-38	38	A-SW 5	6
IF-403,3-36	36	A-SW 4	5
IF-403,3-34	34	A-SW 3	4
IF-403,3-32	32	A-SW 2	3
IF-403,3-30	30	A-SW 1	2
IF-403,3-28	28	A-SW 0	1
IF-403,3-48	48	A-SSW 7	6
IF-403,3-47	47	A-SSW 6	5
IF-403,3-46	46	A-SSW 4	4
IF-403,3-45	45	A-SSW 3	3
IF-403,3-44	44	A-SSW 1	2
IF-403,3-43	43	A-SSW 0	1
IF-403,3-26	26	A-SLED 7B	12
IF-403,3-25	25	A-SLED 7B	12
IF-403,3-24	24	A-SLED 6B	11
IF-403,3-23	23	A-SLED 6B	11
IF-403,3-22	22	A-SLED 4B	10
IF-403,3-21	21	A-SLED 4B	10
IF-403,3-20	20	A-SLED 3B	9
IF-403,3-19	19	A-SLED 3B	9
IF-403,3-18	18	A-SLED 1B	8
IF-403,3-17	17	A-SLED 1B	8
IF-403,3-16	16	A-SLED 0B	7
IF-403,3-15	15	A-SLED 0B	7
IF-403,3-14	14	A-SLED 7A	6
IF-403,3-13	13	A-SLED 7A	6
IF-403,3-12	12	A-SLED 6A	5
IF-403,3-11	11	A-SLED 6A	5
IF-403,3-10	10	A-SLED 4A	4
IF-403,3-9	9	A-SLED 4A	4
IF-403,3-8	8	A-SLED 3A	3
IF-403,3-7	7	A-SLED 3A	3
IF-403,3-6	6	A-SLED 1A	2
IF-403,3-5	5	A-SLED 1A	2
IF-403,3-4	4	A-SLED 0A	1
IF-403,3-3	3	A-SLED 0A	1
IF-403,3-41	41	A-LED 7	8
IF-403,3-39	39	A-LED 6	7
IF-403,3-37	37	A-LED 5	6
IF-403,3-35	35	A-LED 4	5
IF-403,3-33	33	A-LED 3	4
IF-403,3-31	31	A-LED 2	3
IF-403,3-29	29	A-LED 1	2
IF-403,3-27	27	A-LED 0	1

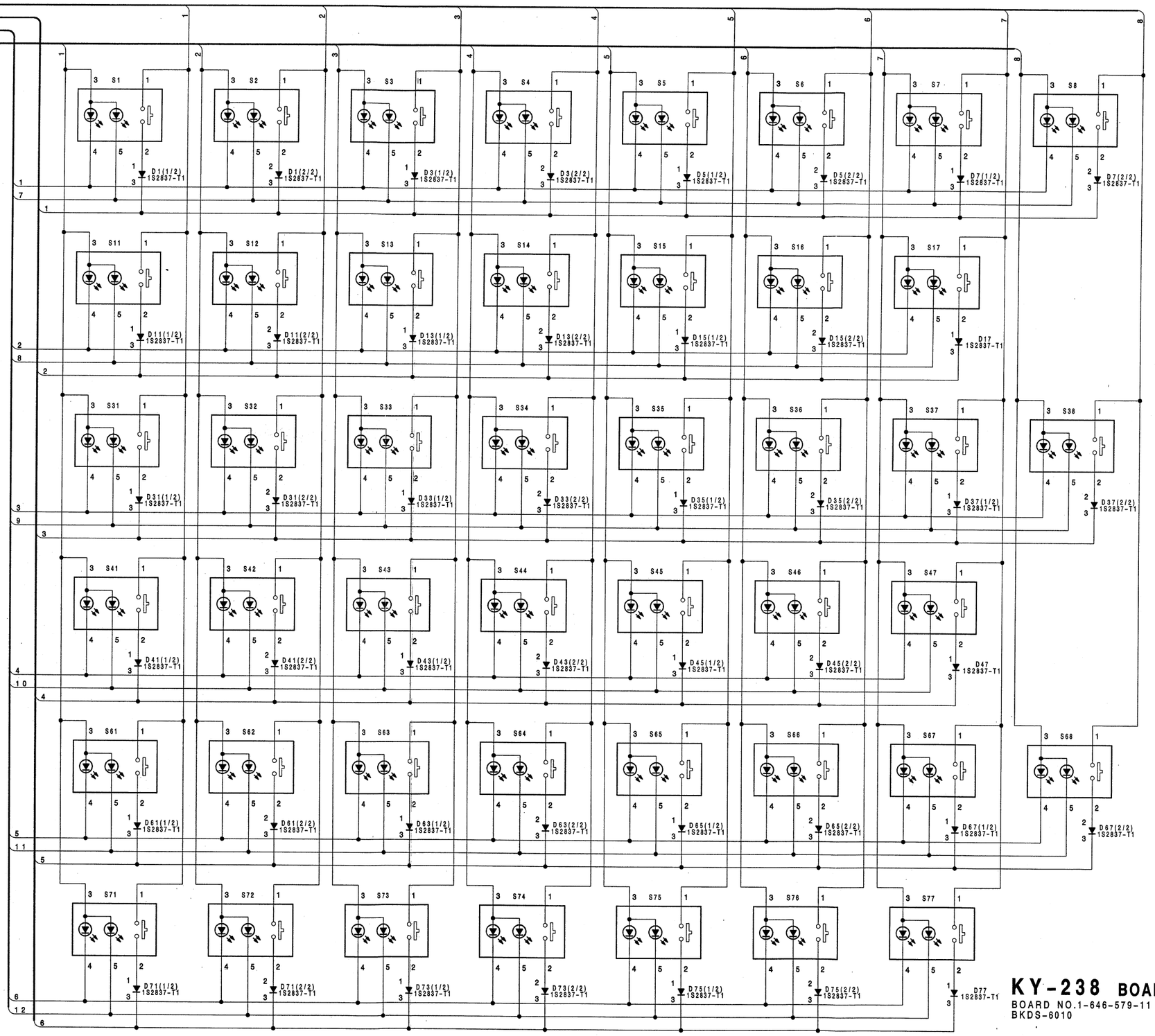

KY-238 BOARD
BOARD NO.1-646-579-11
BKDS-6010

6-17

KY-239(A,B);SWITCH BOARD
LE-111;LED BOARD
LE-112;LED BOARD

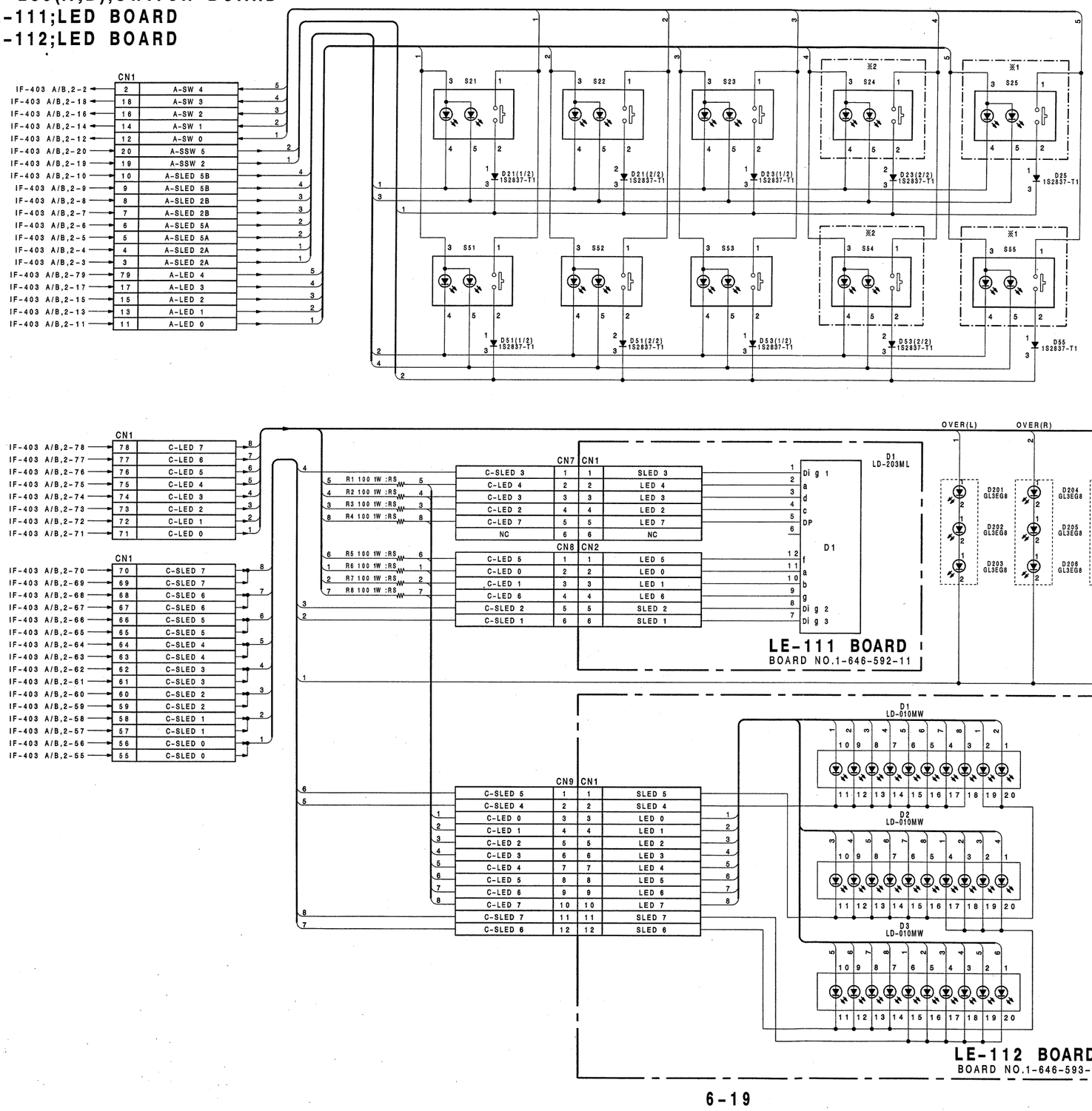

KY-239(A,B),LE-111,LE-112

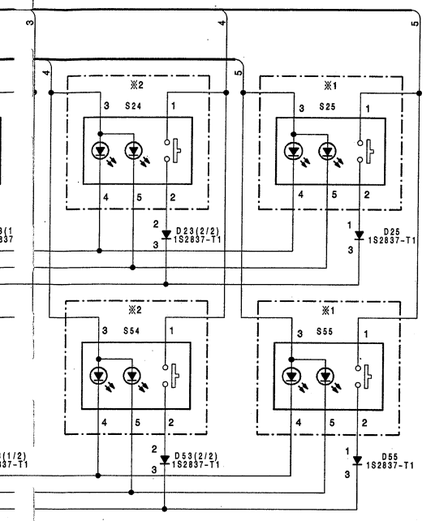

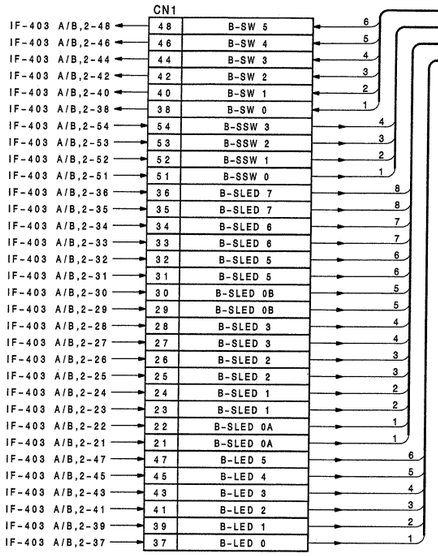

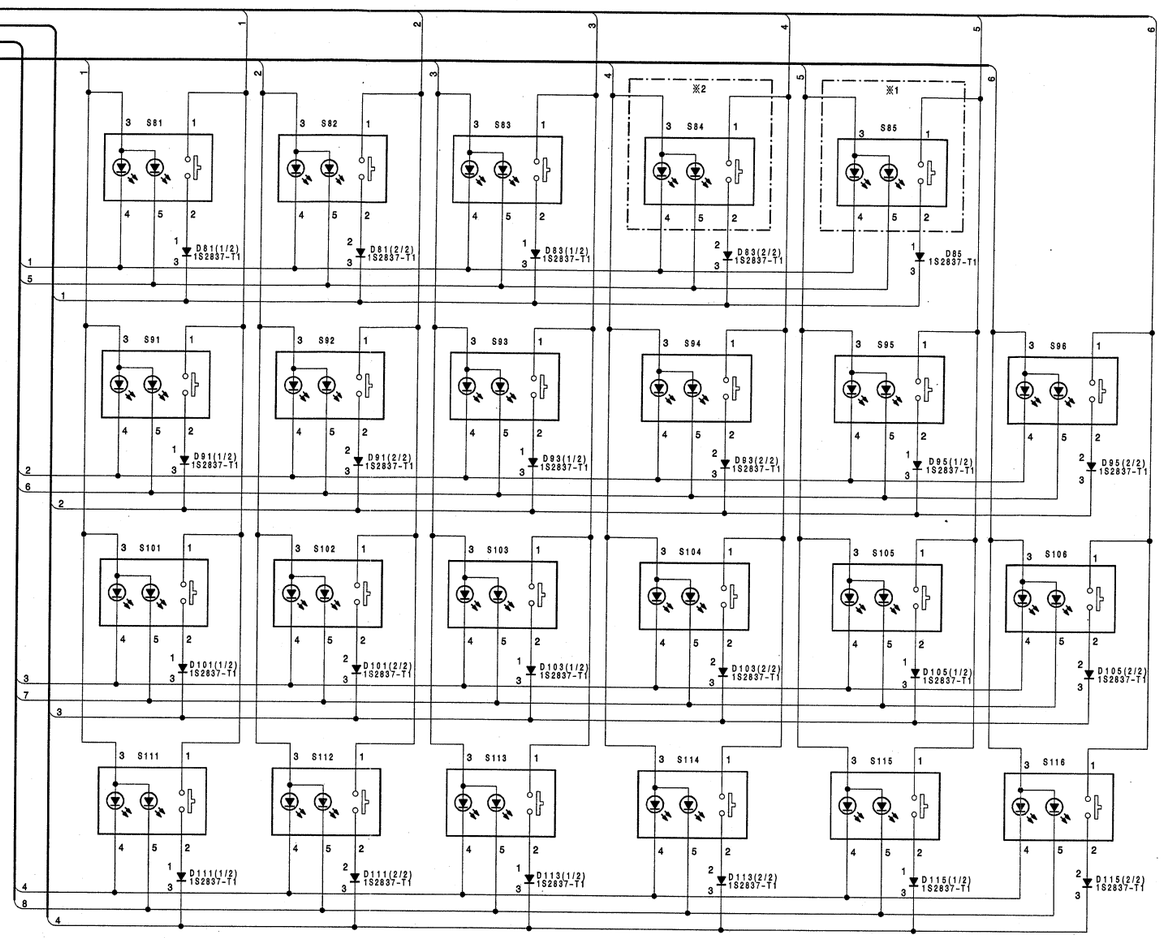

NOTE;
※1: S25,55,85 --- Not mounted for KY-239A
※2: S24,54,84 --- Not mounted for KY-239B

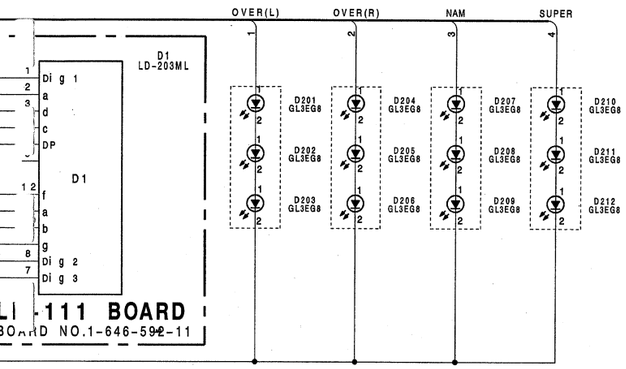

LI -111 BOARD
BOARD NO.1-646-592-11

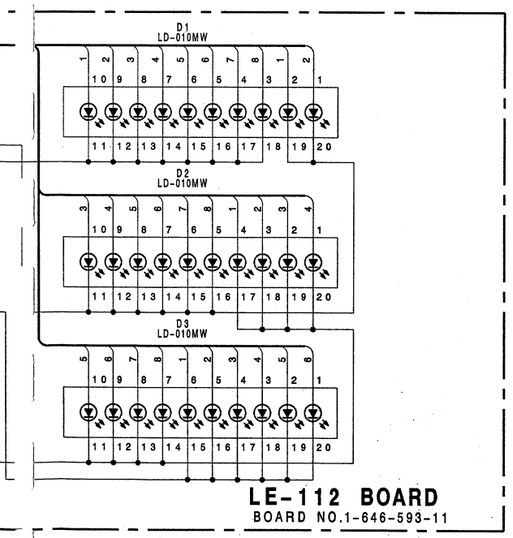

LE-112 BOARD
BOARD NO.1-646-593-11

KY-239(A,B) BOARD
BOARD NO.1-646-580-11

LE-111 BOARD
BOARD NO.1-646-592-11

LE-112 BOARD
BOARD NO.1-646-593-11
BKDS-6010

KY-240(1/3);SWITCH BOARD

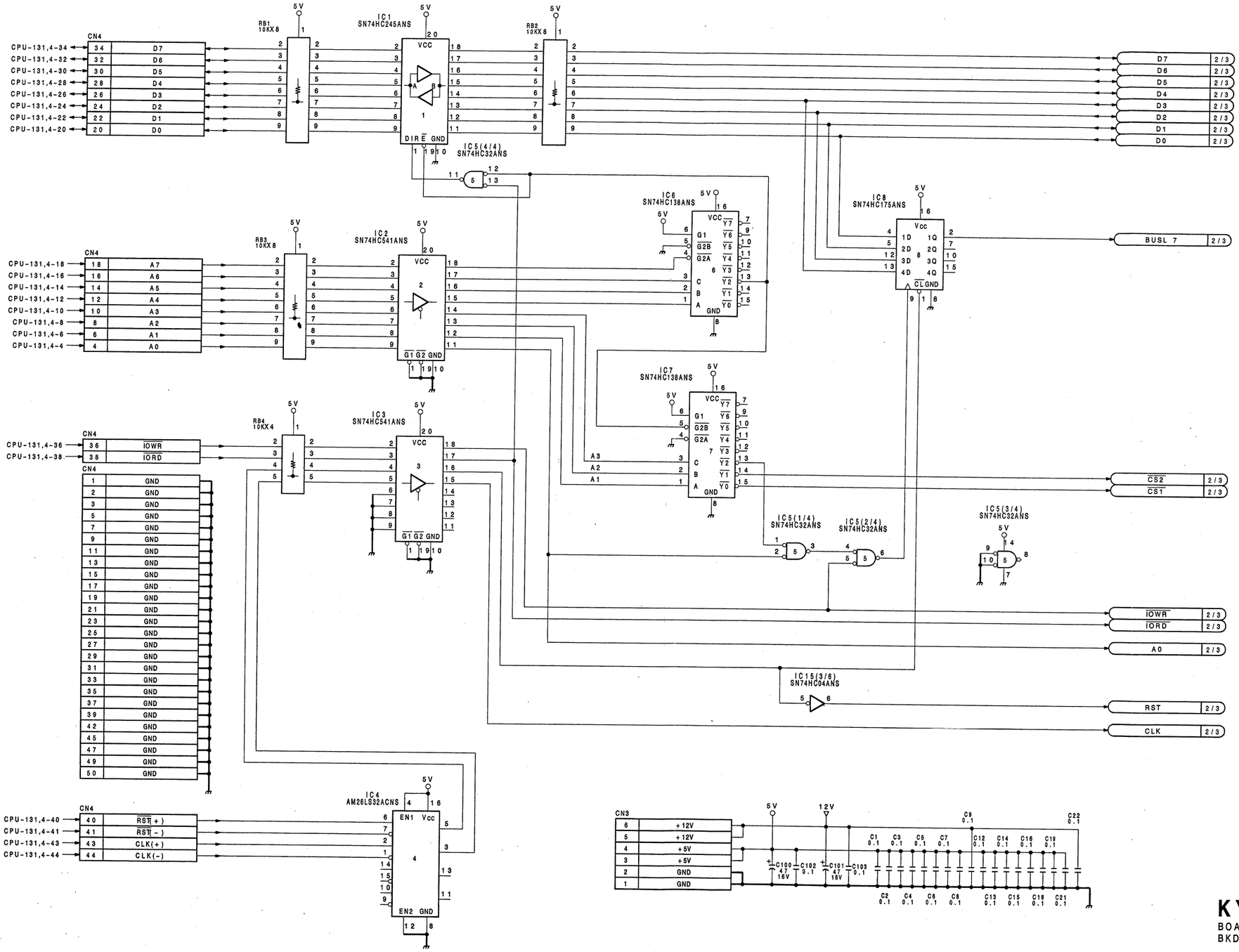

KY-240 BOARD (1/3)

BOARD NO.1-656-581-11
BKDS-6010

A | B | C | D | E | F | G | H

1

2

3

4

5

D (1/3)

I J K L M N O P

KY-240(2/3);SWITCH BOARD
KY-241;SWITCH BOARD
KY-242;SWITCH BOARD

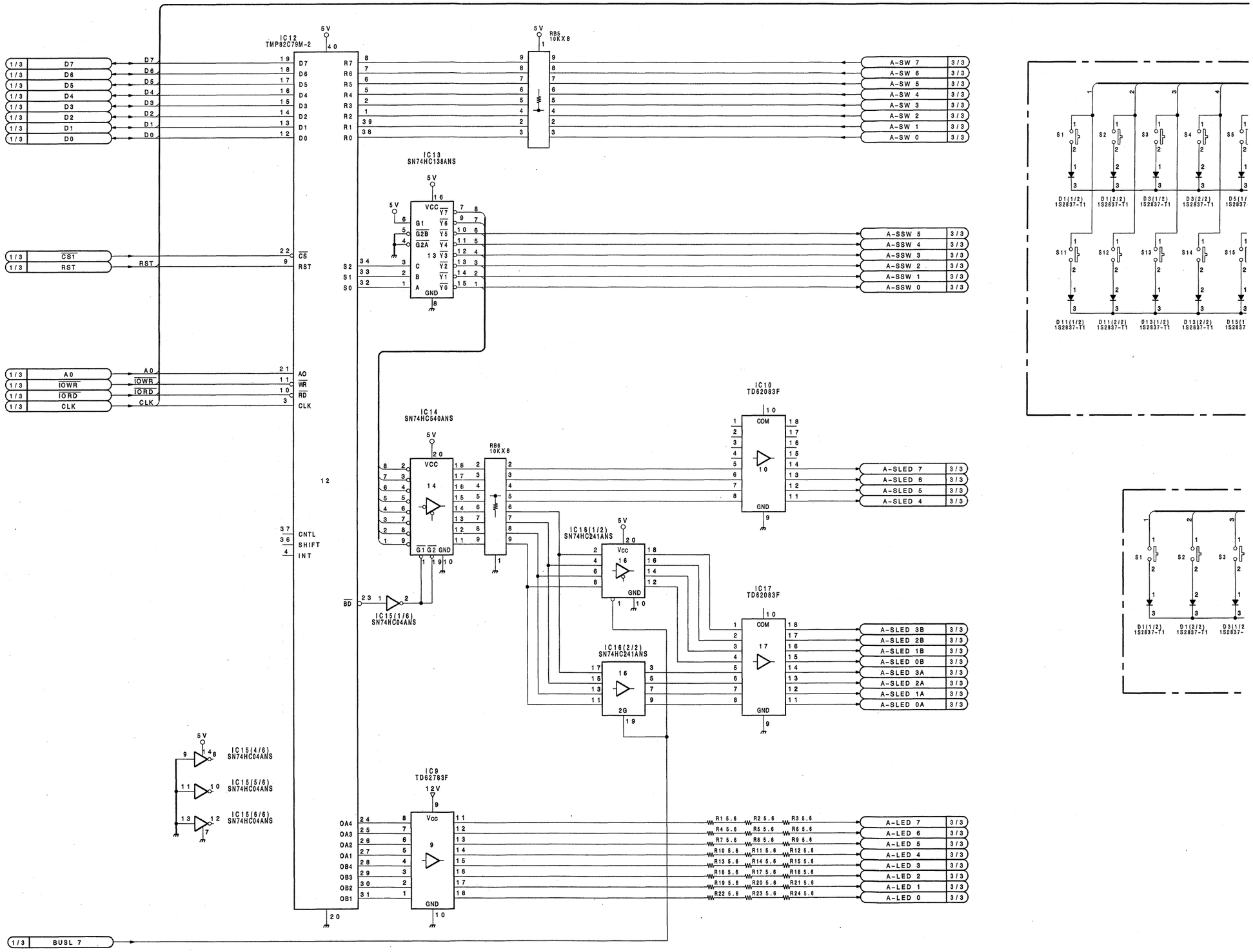

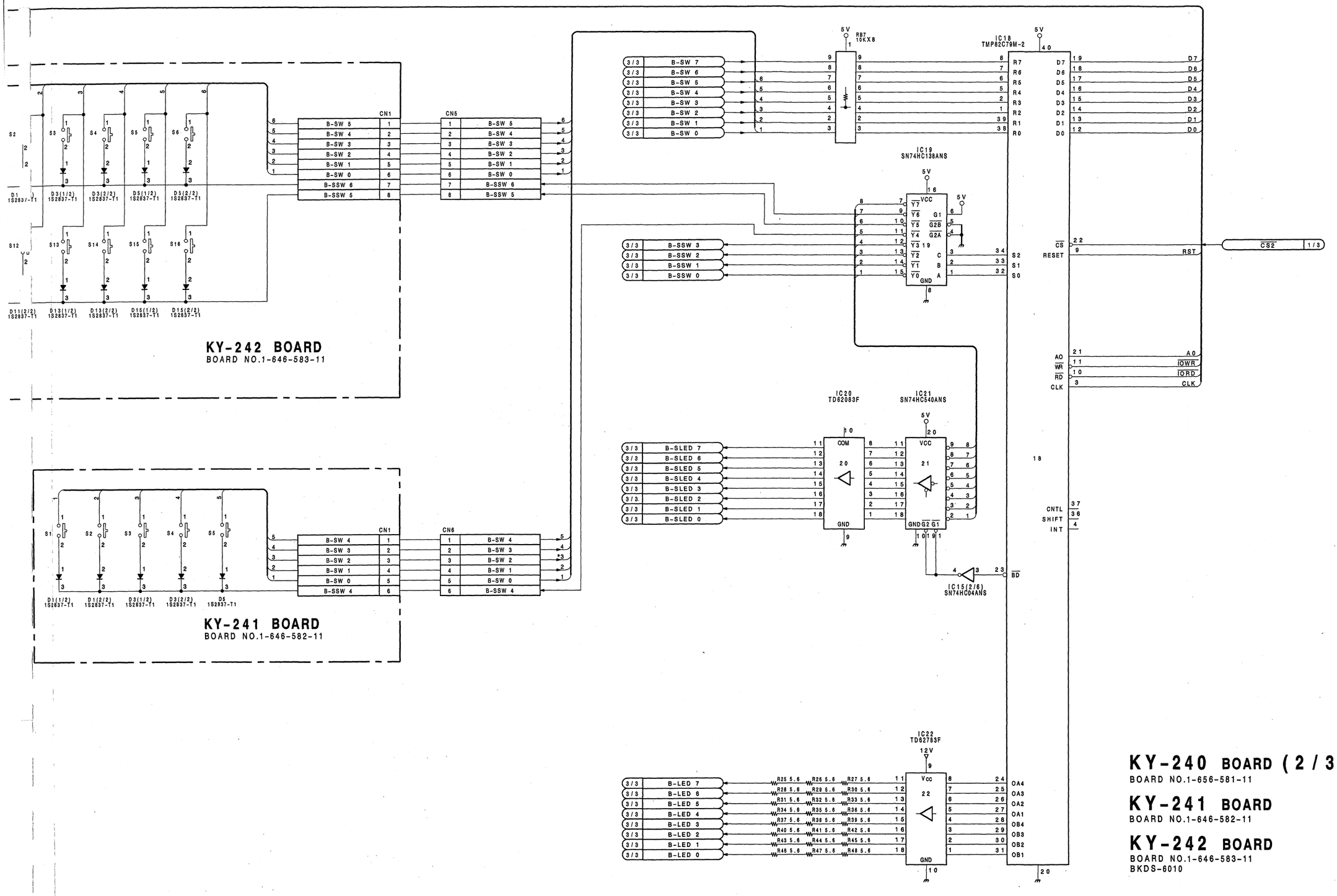

KY-240 BOARD (2/3)
BOARD NO.1-656-581-11

KY-241 BOARD
BOARD NO.1-646-582-11

KY-242 BOARD
BOARD NO.1-646-583-11
BKDS-6010

I J K L M N O P

KY-240(3/3);SWITCH BOARD

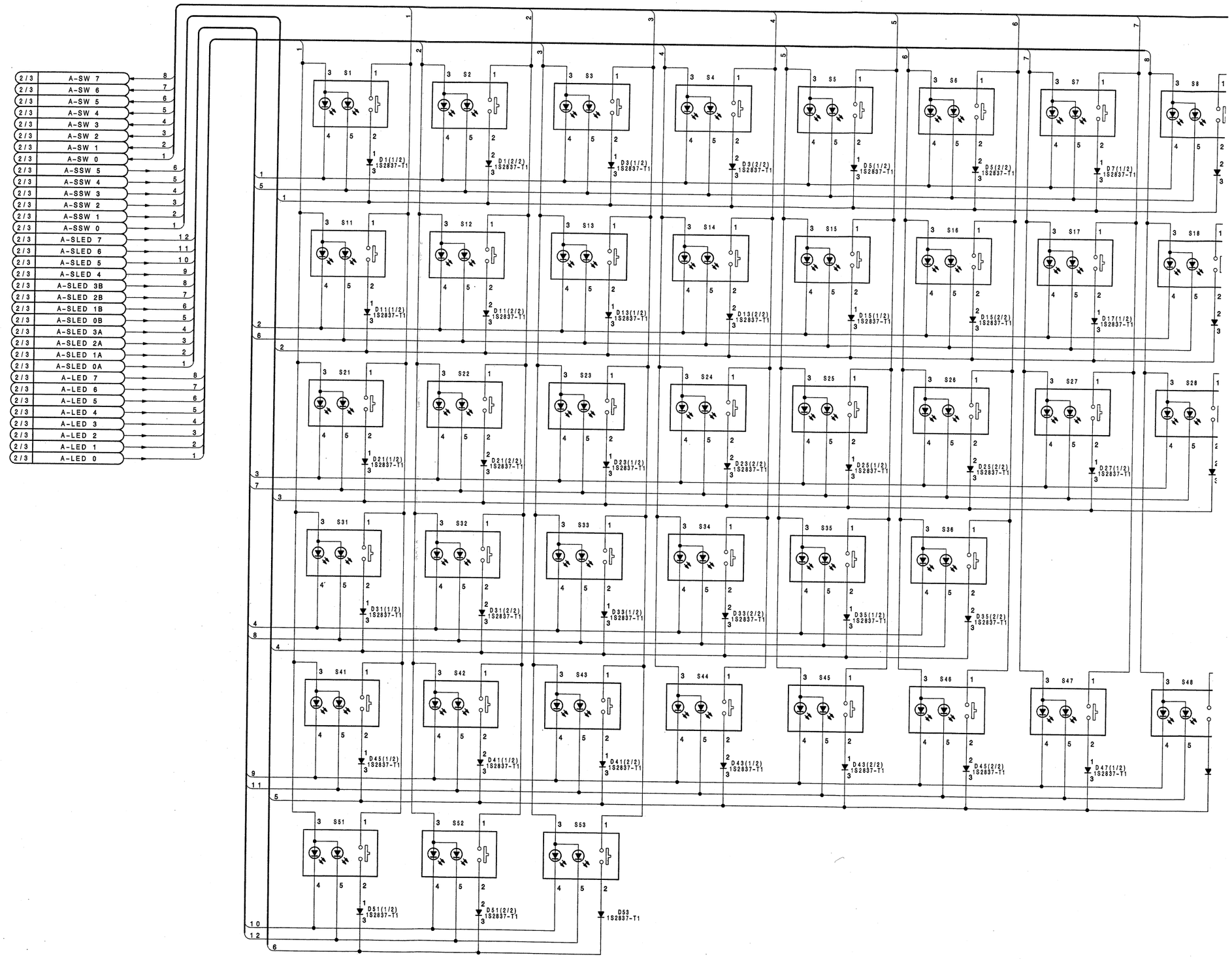

A | B | C | D | E | F | G | H

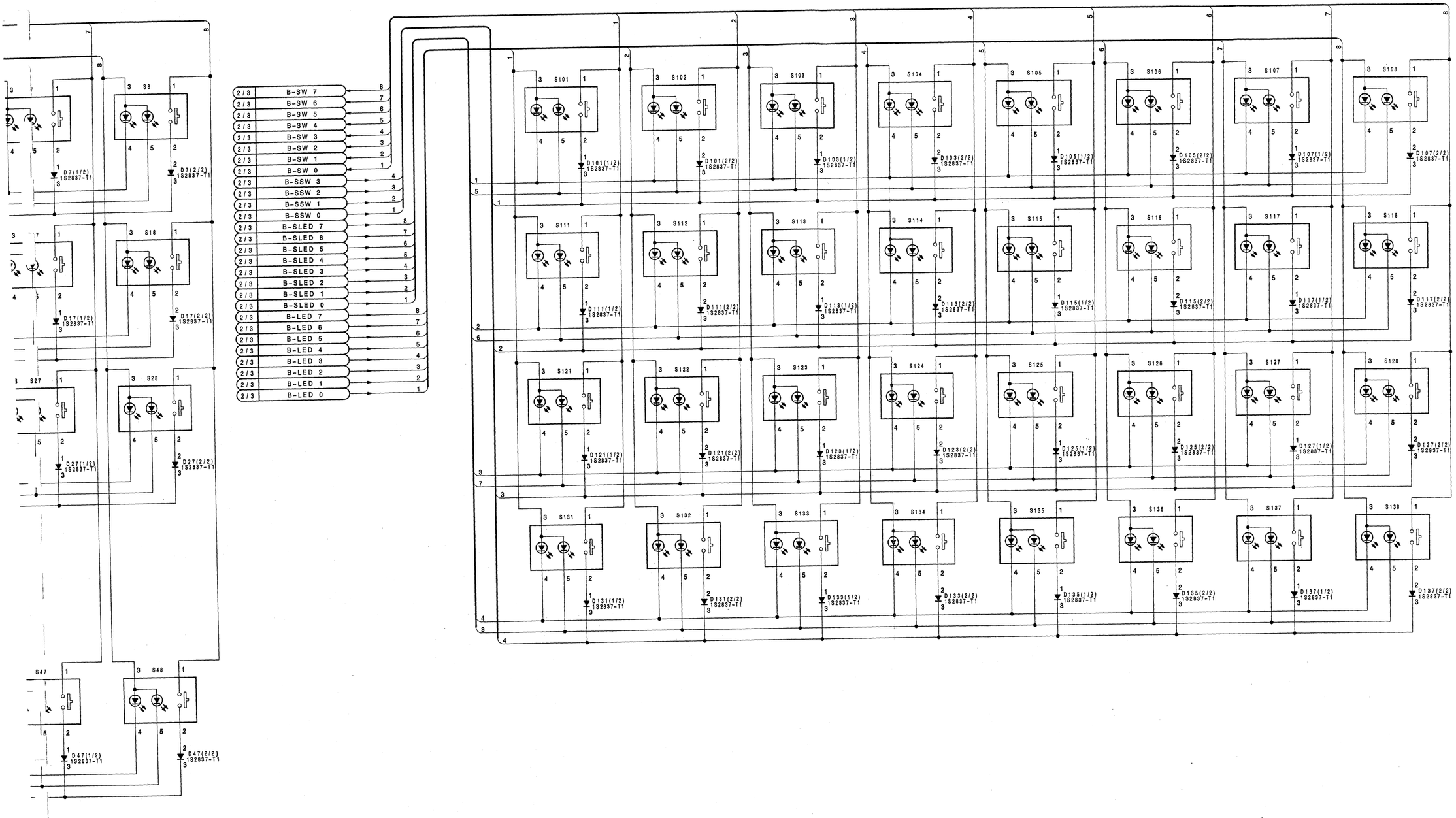

KY-240 BOARD (3/3)

BOARD NO.1-656-581-11
BKDS-6010

KY-243;SWITCH BOARD
LE-113;LED BOARD
LE-114;LED BOARD

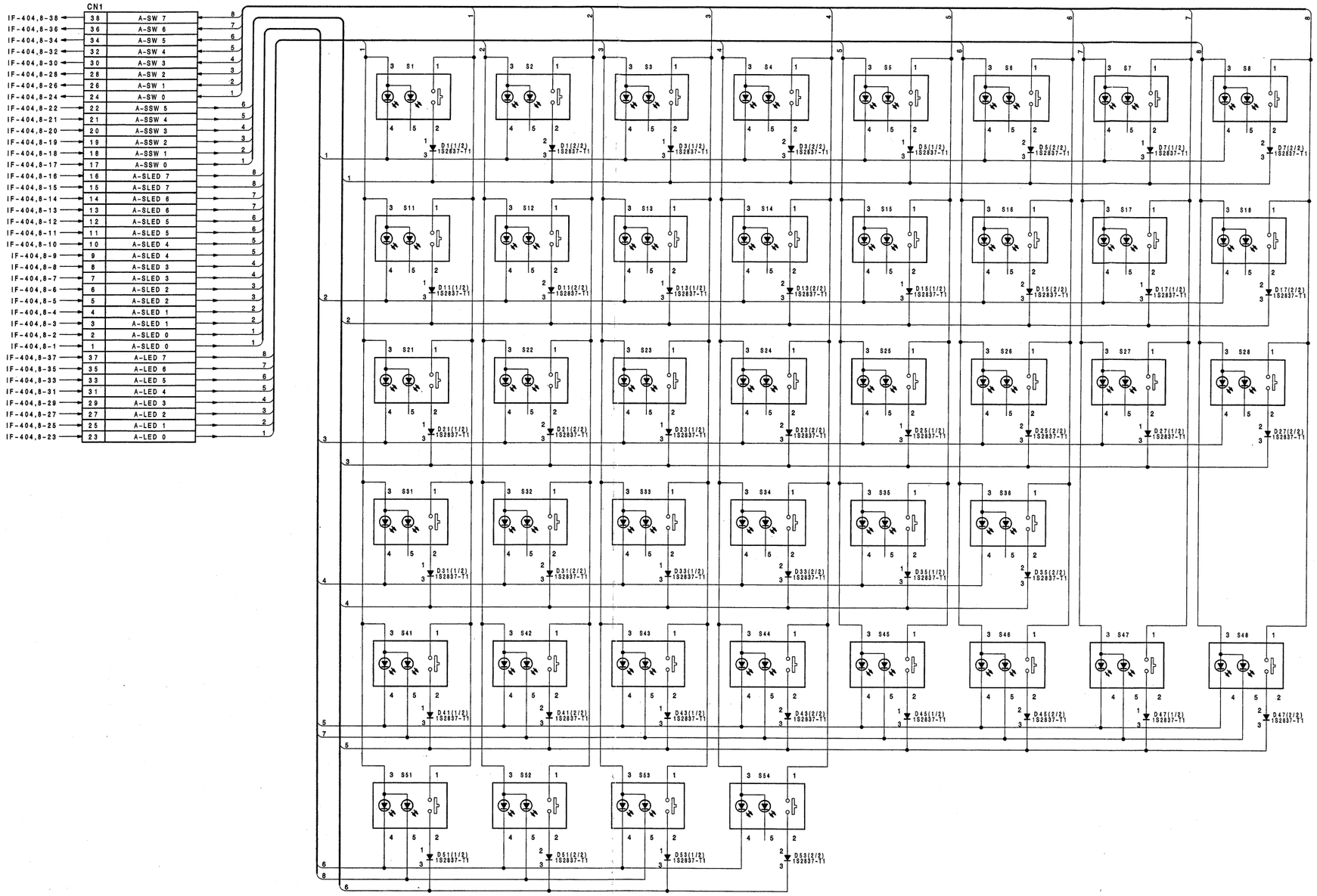

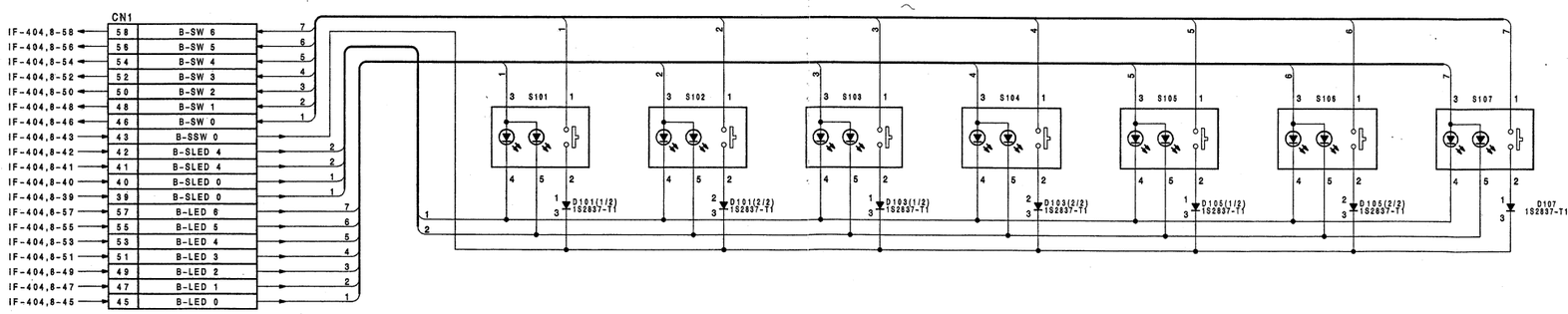

A B C D E F G H

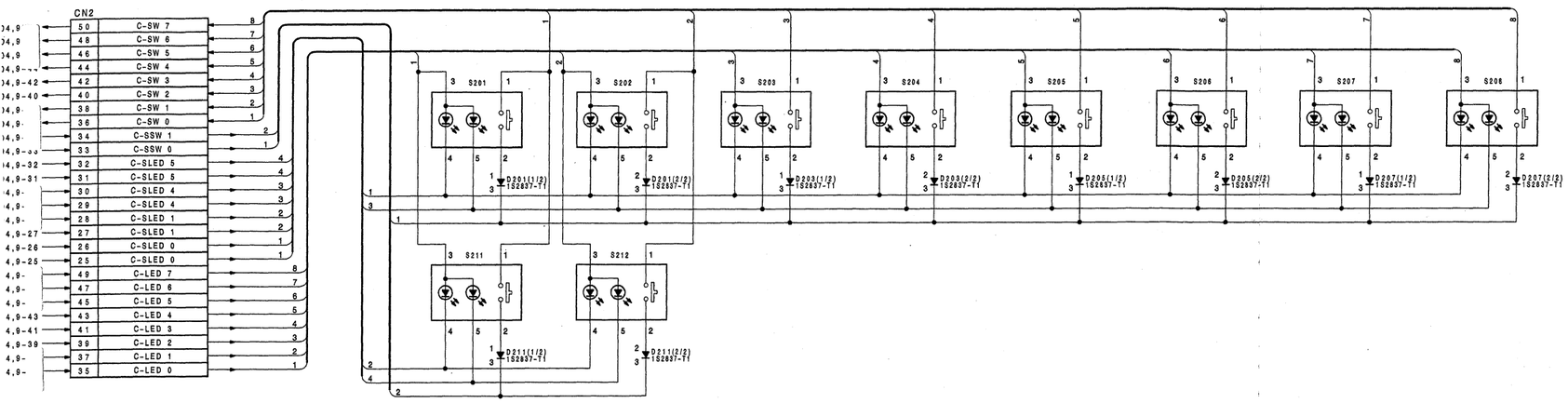

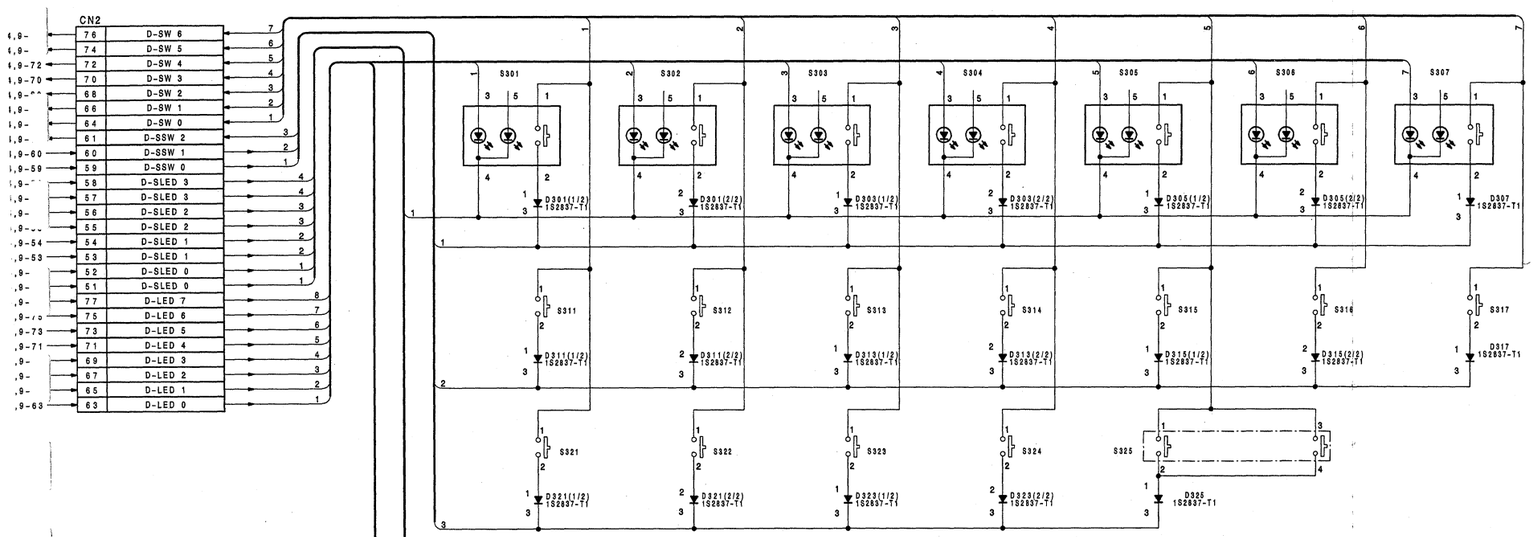

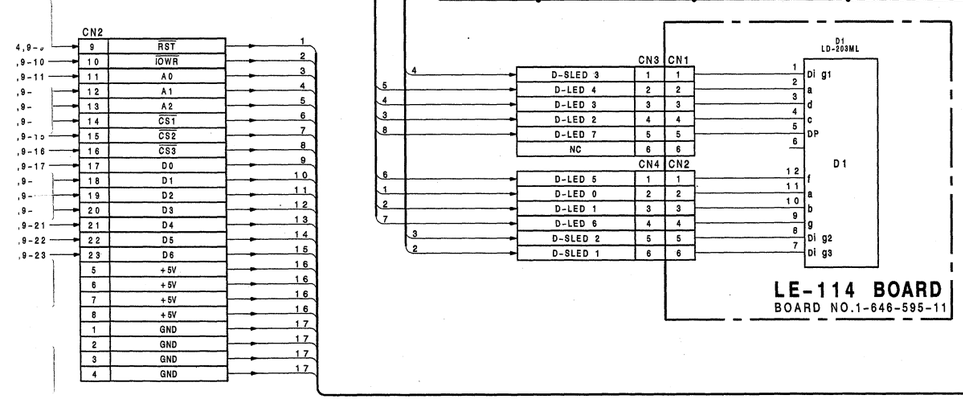

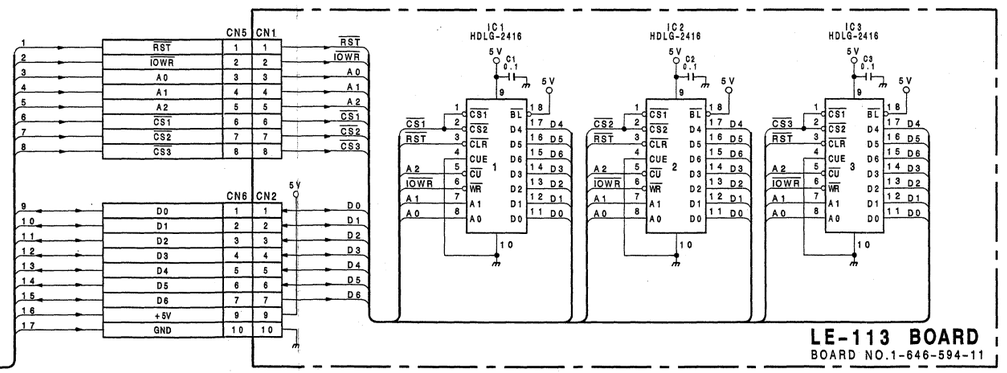

KY-243 BOARD
BOARD NO.1-646-584-11

LE-113 BOARD
BOARD NO.1-646-594-11

LE-114 BOARD
BOARD NO.1-646-595-11
BKDS-6010

KY-244(BKDS-6050);SWITCH BOARD
LE-115(BKDS-6050);LED BOARD

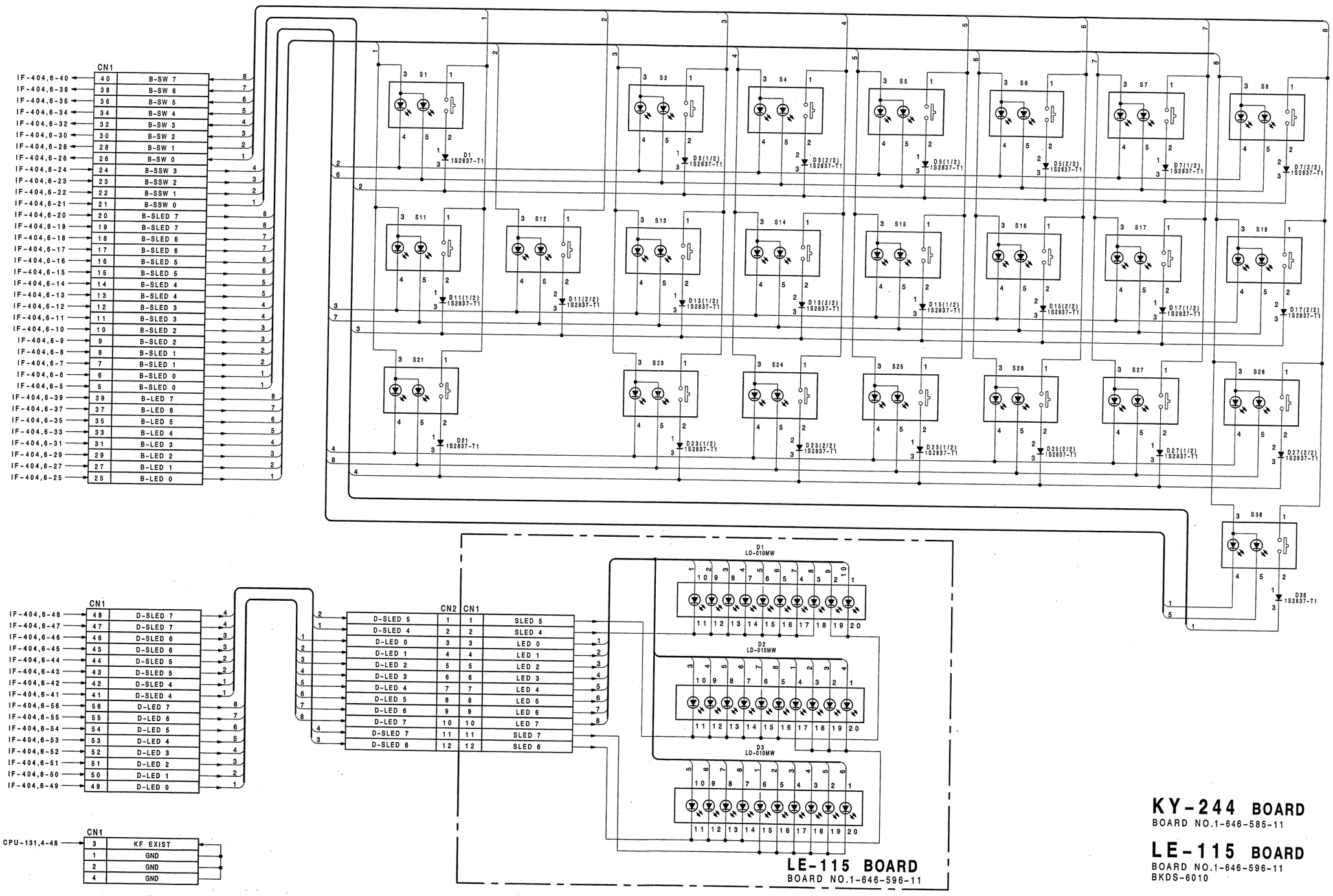

KY-244 BOARD
BOARD NO.1-646-585-11

LE-115 BOARD
BOARD NO.1-646-596-11
BKDS-6010

6-27

KY-245;SWITCH BOARD
KY-246;SWITCH BOARD

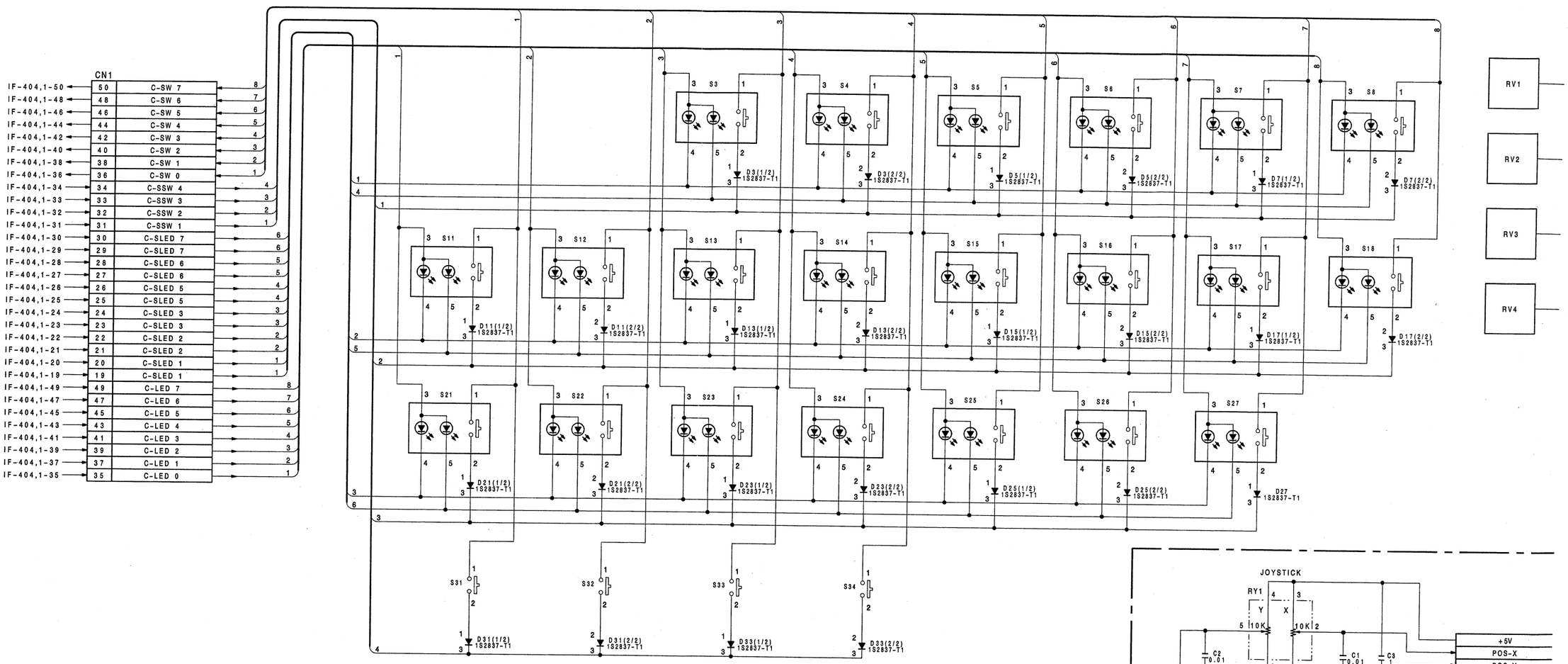

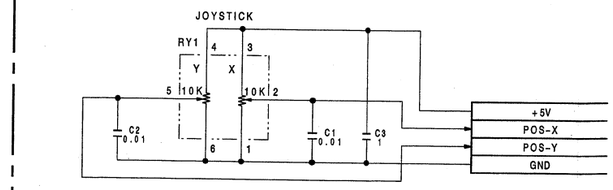

KY-246 BOARD
BOARD NO.1-646-587-11

A B C D E F G H

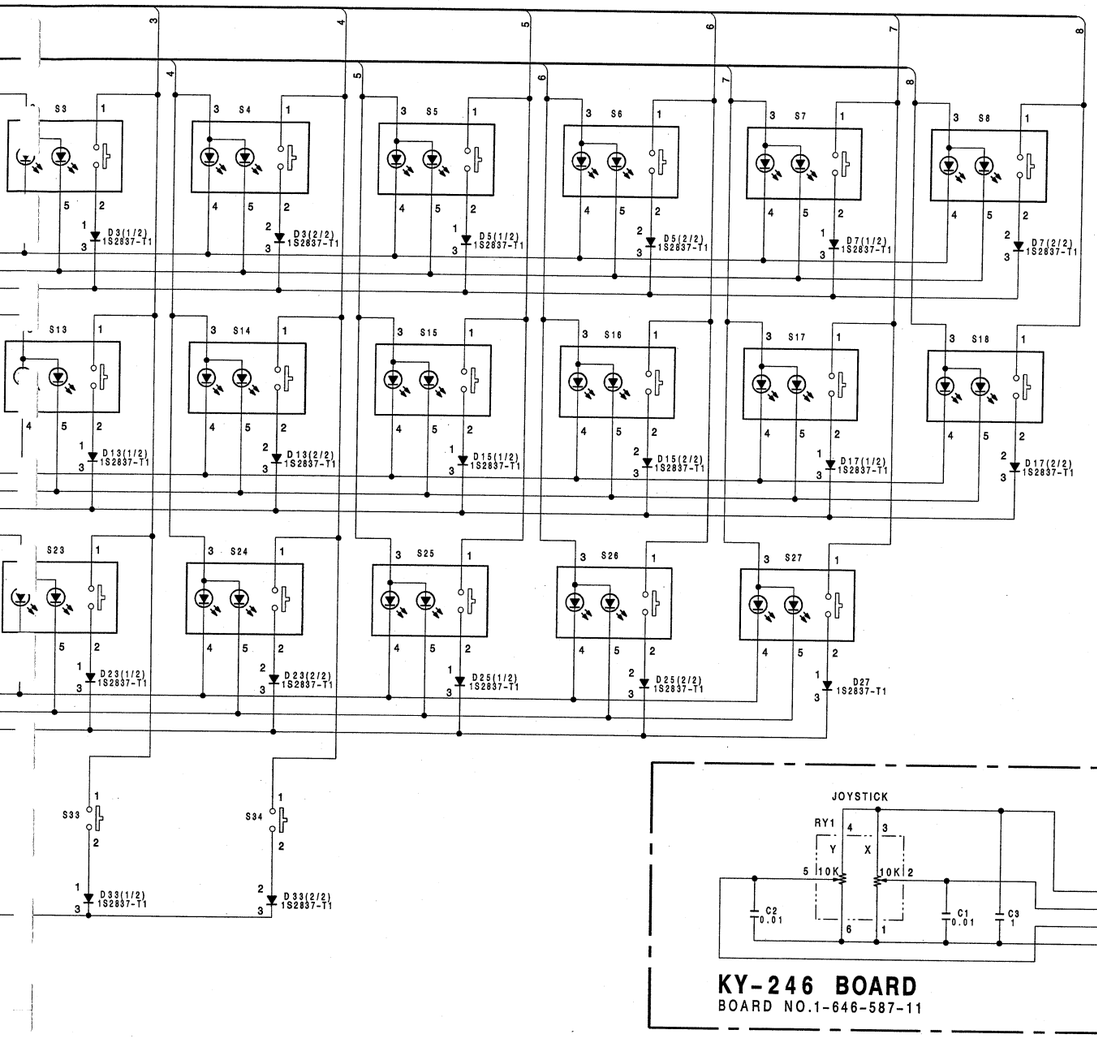

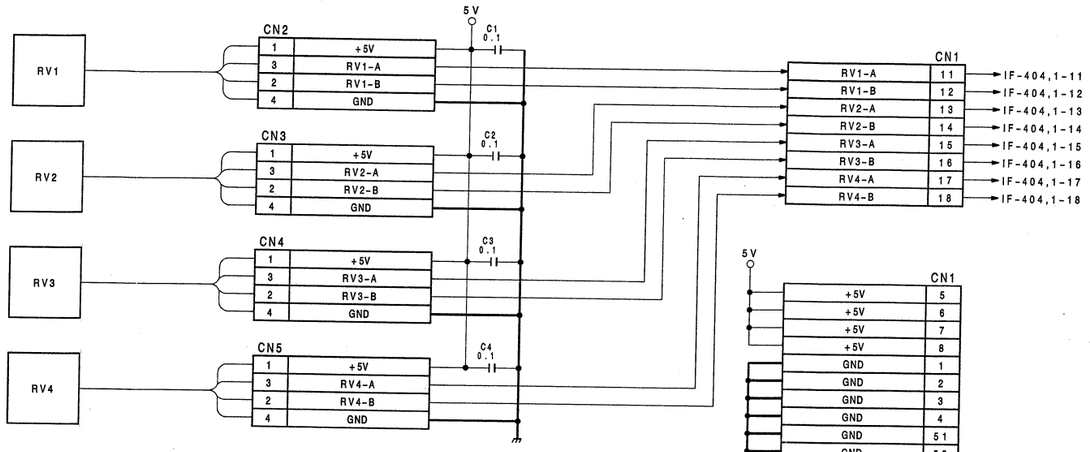

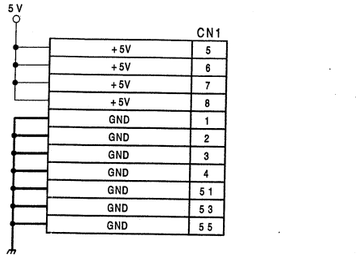

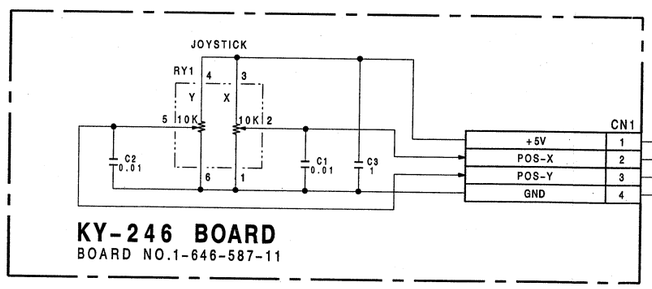

KY-246 BOARD
BOARD NO.1-646-587-11

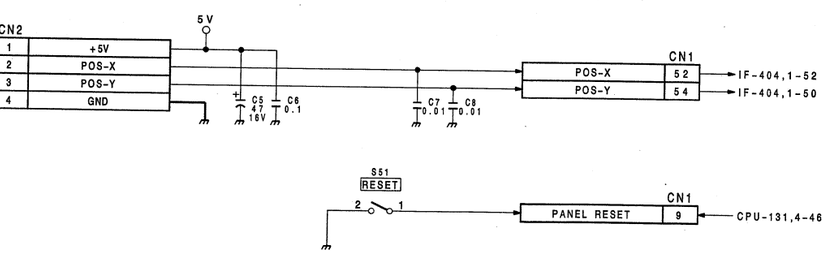

KY-245 BOARD
BOARD NO.1-646-586-11

KY-246 BOARD
BOARD NO.1-646-587-11
BKDS-6010

FRAME(1/3)
CN-789;CONNECTOR BOARD
CN-790;CONNECTOR BOARD

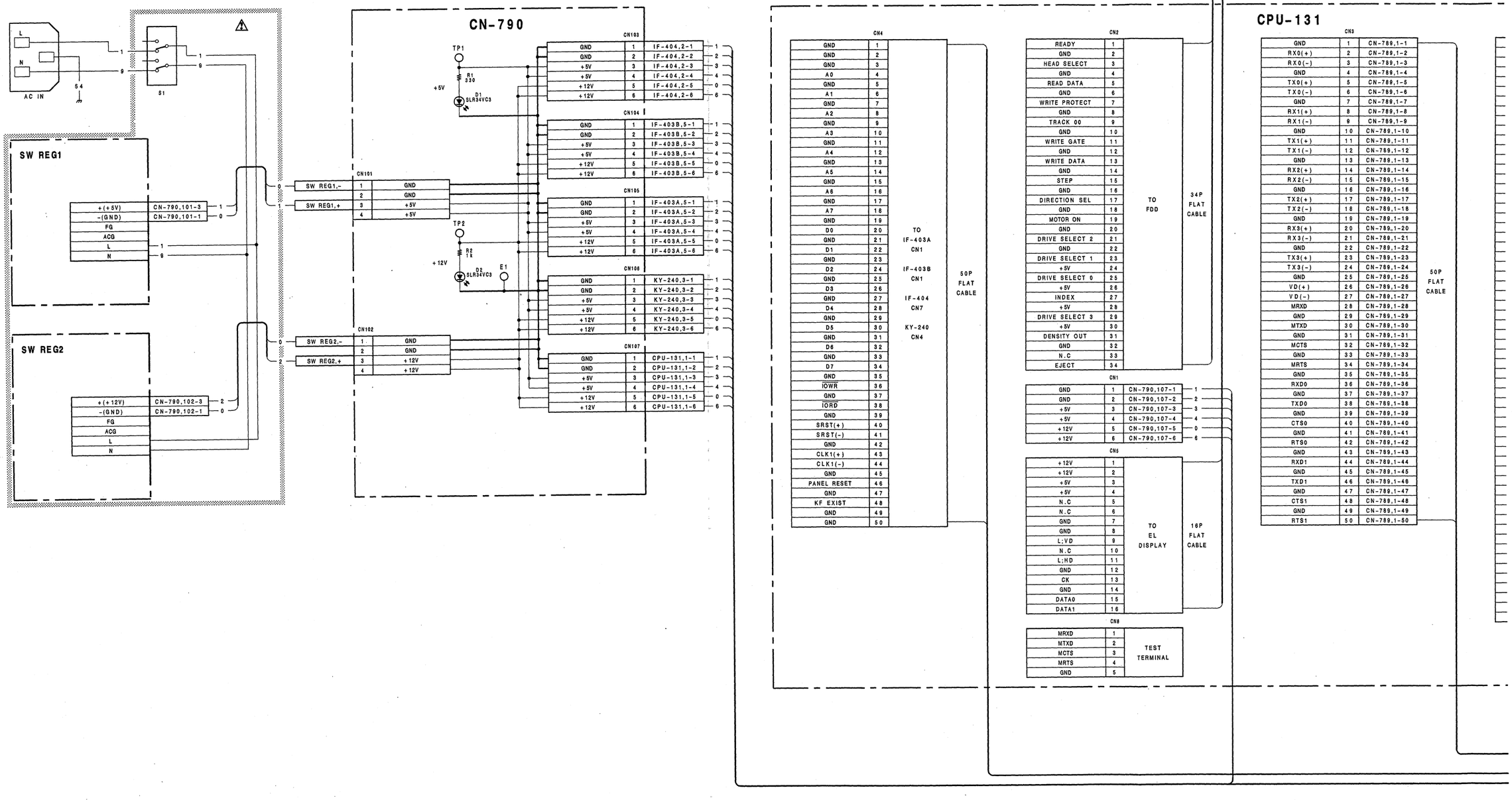

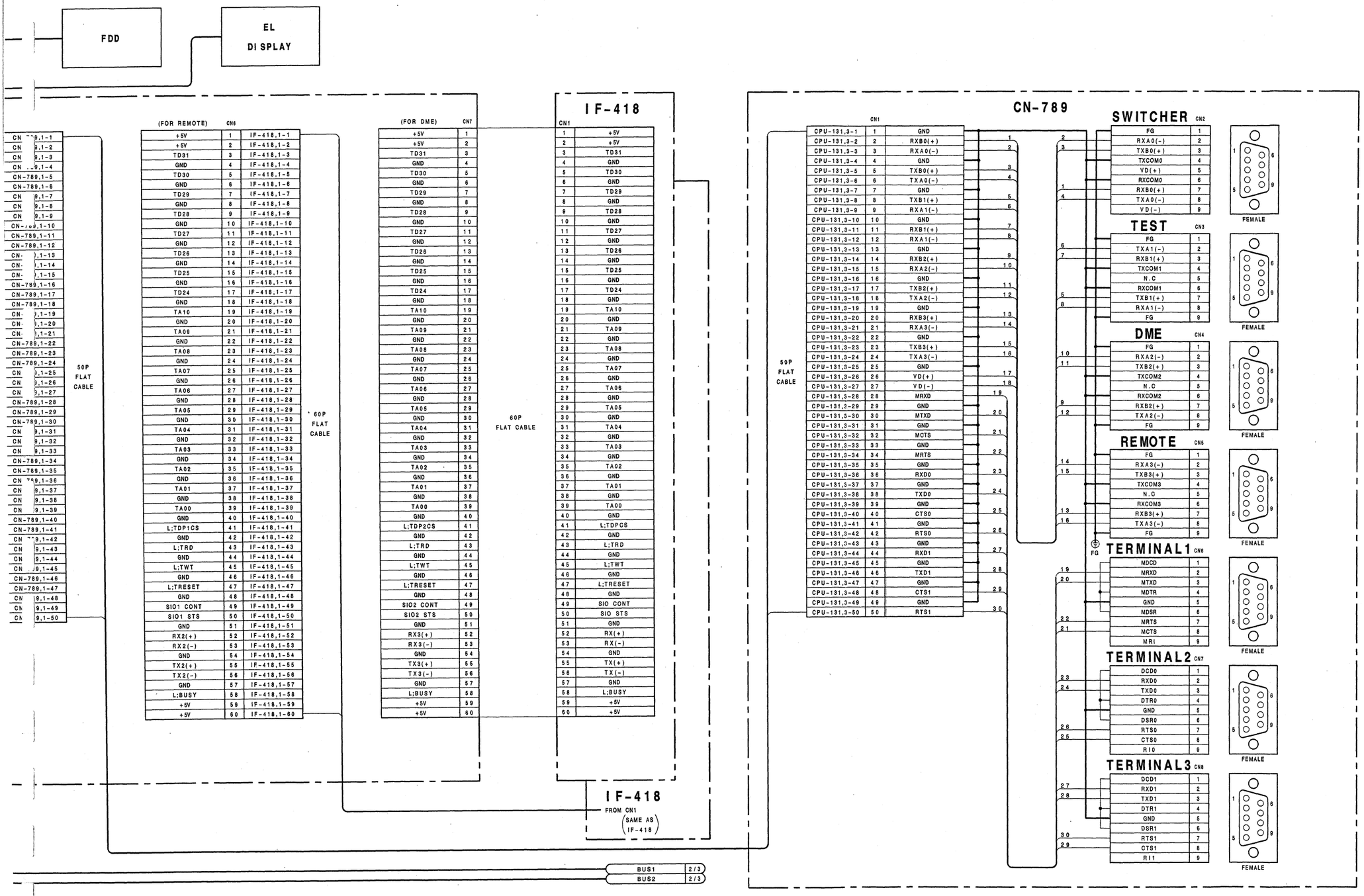

FRAME(1/3)
CN-789 BOARD
BOARD NO.1-646-597-11

CN-790 BOARD
BOARD NO.1-646-598-11

FRAME(2/3)

IF-403A(M/E1)

CN5

CN790,105-1	1	GND
CN790,105-2	2	GND
CN790,105-3	3	+5V
CN790,105-4	4	+5V
CN790,105-5	5	+12V
CN790,105-6	6	+12V

CN4

TO M/E1 FADER LEVER	1	+5V
	2	FADER-A
	3	FADER-B
	4	GND

CN1

CPU-131,4-1	1	GND
CPU-131,4-2	2	GND
CPU-131,4-3	3	GND
CPU-131,4-4	4	A0
CPU-131,4-5	5	GND
CPU-131,4-6	6	A1
CPU-131,4-7	7	GND
CPU-131,4-8	8	A2
CPU-131,4-9	9	GND
CPU-131,4-10	10	A3
CPU-131,4-11	11	GND
CPU-131,4-12	12	A4
CPU-131,4-13	13	GND
CPU-131,4-14	14	A5
CPU-131,4-15	15	GND
CPU-131,4-16	16	A6
CPU-131,4-17	17	GND
CPU-131,4-18	18	A7
CPU-131,4-19	19	GND
CPU-131,4-20	20	D0
CPU-131,4-21	21	GND
CPU-131,4-22	22	D1
CPU-131,4-23	23	GND
CPU-131,4-24	24	D2
CPU-131,4-25	25	GND
CPU-131,4-26	26	D3
CPU-131,4-27	27	GND
CPU-131,4-28	28	D4
CPU-131,4-29	29	GND
CPU-131,4-30	30	D5
CPU-131,4-31	31	GND
CPU-131,4-32	32	D6
CPU-131,4-33	33	GND
CPU-131,4-34	34	D7
CPU-131,4-35	35	GND
CPU-131,4-36	36	$\overline{IOWR}$
CPU-131,4-37	37	GND
CPU-131,4-38	38	$\overline{IORD}$
CPU-131,4-39	39	GND
CPU-131,4-40	40	$\overline{RST}$(+)
CPU-131,4-41	41	$\overline{RST}$(-)
CPU-131,4-42	42	GND
CPU-131,4-43	43	CLK(+)
CPU-131,4-44	44	CLK(-)
CPU-131,4-45	45	GND
CPU-131,4-46	46	PANEL RESET
CPU-131,4-47	47	GND
CPU-131,4-48	48	KF EXIST
CPU-131,4-49	49	GND
CPU-131,4-50	50	GND

50P FLAT CABLE

CN2

N.C	1	KY-239A,1-1
A SW 4	2	KY-239A,1-2
A SLED 2A	3	KY-239A,1-3
A SLED 2A	4	KY-239A,1-4
A SLED 5A	5	KY-239A,1-5
A SLED 5A	6	KY-239A,1-6
A SLED 2B	7	KY-239A,1-7
A SLED 2B	8	KY-239A,1-8
A SLED 5B	9	KY-239A,1-9
A SLED 5B	10	KY-239A,1-10
A LED 0	11	KY-239A,1-11
A SW 0	12	KY-239A,1-12
A LED 1	13	KY-239A,1-13
A SW 1	14	KY-239A,1-14
A LED 2	15	KY-239A,1-15
A SW 2	16	KY-239A,1-16
A LED 3	17	KY-239A,1-17
A SW 3	18	KY-239A,1-18
A SSW 2	19	KY-239A,1-19
A SSW 5	20	KY-239A,1-20
B SLED 0A	21	KY-239A,1-21
B SLED 0A	22	KY-239A,1-22
B SLED 1A	23	KY-239A,1-23
B SLED 1A	24	KY-239A,1-24
B SLED 2A	25	KY-239A,1-25
B SLED 2A	26	KY-239A,1-26
B SLED 3A	27	KY-239A,1-27
B SLED 3A	28	KY-239A,1-28
B SLED 0B	29	KY-239A,1-29
B SLED 0B	30	KY-239A,1-30
B SLED 5B	31	KY-239A,1-31
B SLED 5B	32	KY-239A,1-32
B SLED 6B	33	KY-239A,1-33
B SLED 6B	34	KY-239A,1-34
B SLED 7B	35	KY-239A,1-35
B SLED 7B	36	KY-239A,1-36
B LED 0	37	KY-239A,1-37
B SW 0	38	KY-239A,1-38
B LED 1	39	KY-239A,1-39
B SW 1	40	KY-239A,1-40
B LED 2	41	KY-239A,1-41
B SW 2	42	KY-239A,1-42
B LED 3	43	KY-239A,1-43
B SW 3	44	KY-239A,1-44
B LED 4	45	KY-239A,1-45
B SW 4	46	KY-239A,1-46
B LED 5	47	KY-239A,1-47
B SW 5	48	KY-239A,1-48
N.C	49	KY-239A,1-49
N.C	50	KY-239A,1-50
B SSW 0	51	KY-239A,1-51
B SSW 1	52	KY-239A,1-52
B SSW 2	53	KY-239A,1-53
B SSW 3	54	KY-239A,1-54
C SLED 0	55	KY-239A,1-55
C SLED 0	56	KY-239A,1-56
C SLED 1	57	KY-239A,1-57
C SLED 1	58	KY-239A,1-58
C SLED 2	59	KY-239A,1-59
C SLED 2	60	KY-239A,1-60
C SLED 3	61	KY-239A,1-61
C SLED 3	62	KY-239A,1-62
C SLED 4	63	KY-239A,1-63
C SLED 4	64	KY-239A,1-64
C SLED 5	65	KY-239A,1-65
C SLED 5	66	KY-239A,1-66
C SLED 6	67	KY-239A,1-67
C SLED 6	68	KY-239A,1-68
C SLED 7	69	KY-239A,1-69
C SLED 7	70	KY-239A,1-70
C LED 0	71	KY-239A,1-71
C LED 1	72	KY-239A,1-72
C LED 2	73	KY-239A,1-73
C LED 3	74	KY-239A,1-74
C LED 4	75	KY-239A,1-75
C LED 5	76	KY-239A,1-76
C LED 6	77	KY-239A,1-77
C LED 7	78	KY-239A,1-78
A LED 4	79	KY-239A,1-79
N.C	80	KY-239A,1-80

80P FLAT CABLE

KY-238

CN3

N.C	1
N.C	2
A SLED 0A	3
A SLED 0A	4
A SLED 1A	5
A SLED 1A	6
A SLED 3A	7
A SLED 3A	8
A SLED 4A	9
A SLED 4A	10
A SLED 6A	11
A SLED 6A	12
A SLED 7A	13
A SLED 7A	14
A SLED 0B	15
A SLED 0B	16
A SLED 1B	17
A SLED 1B	18
A SLED 3B	19
A SLED 3B	20
A SLED 4B	21
A SLED 4B	22
A SLED 6B	23
A SLED 6B	24
A SLED 7B	25
A SLED 7B	26
A LED 0	27
A SW 0	28
A LED 1	29
A SW 1	30
A LED 2	31
A SW 2	32
A LED 3	33
A SW 3	34
A LED 4	35
A SW 4	36
A LED 5	37
A SW 5	38
A LED 6	39
A SW 6	40
A LED 7	41
A SW 7	42
A SSW 0	43
A SSW 1	44
A SSW 3	45
A SSW 4	46
A SSW 6	47
A SSW 7	48
N.C	49
N.C	50

50P FLAT CABLE

CN1

1	N.C
2	N.C
3	A SLED 0A
4	A SLED 0A
5	A SLED 1A
6	A SLED 1A
7	A SLED 3A
8	A SLED 3A
9	A SLED 4A
10	A SLED 4A
11	A SLED 6A
12	A SLED 6A
13	A SLED 7A
14	A SLED 7A
15	A SLED 0B
16	A SLED 0B
17	A SLED 1B
18	A SLED 1B
19	A SLED 3B
20	A SLED 3B
21	A SLED 4B
22	A SLED 4B
23	A SLED 6B
24	A SLED 6B
25	A SLED 7B
26	A SLED 7B
27	A LED 0
28	A SW 0
29	A LED 1
30	A SW 1
31	A LED 2
32	A SW 2
33	A LED 3
34	A SW 3
35	A LED 4
36	A SW 4
37	A LED 5
38	A SW 5
39	A LED 6
40	A SW 6
41	A LED 7
42	A SW 7
43	A SSW 0
44	A SSW 1
45	A SSW 3
46	A SSW 4
47	A SSW 6
48	A SSW 7
49	N.C
50	N.C

KY-239A(M/E1)

CN1

IF-403A,2-1	1	N.C
IF-403A,2-2	2	A SW 4
IF-403A,2-3	3	A SLED 2A
IF-403A,2-4	4	A SLED 2A
IF-403A,2-5	5	A SLED 5A
IF-403A,2-6	6	A SLED 5A
IF-403A,2-7	7	A SLED 2B
IF-403A,2-8	8	A SLED 2B
IF-403A,2-9	9	A SLED 5B
IF-403A,2-10	10	A SLED 5B
IF-403A,2-11	11	A LED 0
IF-403A,2-12	12	A SW 0
IF-403A,2-13	13	A LED 1
IF-403A,2-14	14	A SW 1
IF-403A,2-15	15	A LED 2
IF-403A,2-16	16	A SW 2
IF-403A,2-17	17	A LED 3
IF-403A,2-18	18	A SW 3
IF-403A,2-19	19	A SSW 2
IF-403A,2-20	20	A SSW 5
IF-403A,2-21	21	B SLED 0A
IF-403A,2-22	22	B SLED 0A
IF-403A,2-23	23	B SLED 1A
IF-403A,2-24	24	B SLED 1A
IF-403A,2-25	25	B SLED 2A
IF-403A,2-26	26	B SLED 2A
IF-403A,2-27	27	B SLED 3A
IF-403A,2-28	28	B SLED 3A
IF-403A,2-29	29	B SLED 0B
IF-403A,2-30	30	B SLED 0B
IF-403A,2-31	31	B SLED 5B
IF-403A,2-32	32	B SLED 5B
IF-403A,2-33	33	B SLED 6B
IF-403A,2-34	34	B SLED 6B
IF-403A,2-35	35	B SLED 7B
IF-403A,2-36	36	B SLED 7B
IF-403A,2-37	37	B LED 0
IF-403A,2-38	38	B SW 0
IF-403A,2-39	39	B LED 1
IF-403A,2-40	40	B SW 1
IF-403A,2-41	41	B LED 2
IF-403A,2-42	42	B SW 2
IF-403A,2-43	43	B LED 3
IF-403A,2-44	44	B SW 3
IF-403A,2-45	45	B LED 4
IF-403A,2-46	46	B SW 4
IF-403A,2-47	47	B LED 5
IF-403A,2-48	48	B SW 5
IF-403A,2-49	49	N.C
IF-403A,2-50	50	N.C
IF-403A,2-51	51	B SSW 0
IF-403A,2-52	52	B SSW 1
IF-403A,2-53	53	B SSW 2
IF-403A,2-54	54	B SSW 3
IF-403A,2-55	55	C SLED 0
IF-403A,2-56	56	C SLED 0
IF-403A,2-57	57	C SLED 1
IF-403A,2-58	58	C SLED 1
IF-403A,2-59	59	C SLED 2
IF-403A,2-60	60	C SLED 2
IF-403A,2-61	61	C SLED 3
IF-403A,2-62	62	C SLED 3
IF-403A,2-63	63	C SLED 4
IF-403A,2-64	64	C SLED 4
IF-403A,2-65	65	C SLED 5
IF-403A,2-66	66	C SLED 5
IF-403A,2-67	67	C SLED 6
IF-403A,2-68	68	C SLED 6
IF-403A,2-69	69	C SLED 7
IF-403A,2-70	70	C SLED 7
IF-403A,2-71	71	C LED 0
IF-403A,2-72	72	C LED 1
IF-403A,2-73	73	C LED 2
IF-403A,2-74	74	C LED 3
IF-403A,2-75	75	C LED 4
IF-403A,2-76	76	C LED 5
IF-403A,2-77	77	C LED 6
IF-403A,2-78	78	C LED 7
IF-403A,2-79	79	A LED 4
IF-403A,2-80	80	N.C

80P FLAT CABLE

FROM KY-239B CN2

IF-403B(M/E2)

(SAME AS IF-403A(M/E1))

KY-238

(SAME AS KY-238)

FROM IF-403B CN2

80P BOARD TO BOARD CONNECTOR

80P BOARD TO BOARD CONNECTOR

1/3	BUS1
1/3	BUS2

K -239A(M/ E1)

CN1

IF-403A,2-1	1	N.C
403A,2-2	2	A SW 4
403A,2-3	3	A SLED 2A
403A,2-4	4	A SLED 2A
IF-403A,2-5	5	A SLED 5A
IF-403A,2-6	6	A SLED 5A
IF-403A,2-7	7	A SLED 2B
403A,2-8	8	A SLED 2B
403A,2-9	9	A SLED 5B
03A,2-10	10	A SLED 5B
IF-403A,2-11	11	A LED 0
IF-403A,2-12	12	A SW 0
IF-403A,2-13	13	A LED 1
03A,2-14	14	A SW 1
03A,2-15	15	A LED 2
03A,2-16	16	A SW 2
IF-403A,2-17	17	A LED 3
IF-403A,2-18	18	A SW 3
03A,2-19	19	A SSW 2
03A,2-20	20	A SSW 5
03A,2-21	21	B SLED 0A
03A,2-22	22	B SLED 0A
IF-403A,2-23	23	B SLED 1A
IF-403A,2-24	24	B SLED 1A
03A,2-25	25	B SLED 2A
03A,2-26	26	B SLED 2A
03A,2-27	27	B SLED 3A
03A,2-28	28	B SLED 3A
IF-403A,2-29	29	B SLED 0B
IF-403A,2-30	30	B SLED 0B
03A,2-31	31	B SLED 5B
03A,2-32	32	B SLED 5B
03A,2-33	33	B SLED 6B
IF-403A,2-34	34	B SLED 6B
IF-403A,2-35	35	B SLED 7B
IF-403A,2-36	36	B SLED 7B
03A,2-37	37	B LED 0
03A,2-38	38	B SW 0
03A,2-39	39	B LED 1
IF-403A,2-40	40	B SW 1
IF-403A,2-41	41	B LED 2
IF-403A,2-42	42	B SW 2
03A,2-43	43	B LED 3
03A,2-44	44	B SW 3
03A,2-45	45	B LED 4
IF-403A,2-46	46	B SW 4
IF-403A,2-47	47	B LED 5
IF-403A,2-48	48	B SW 5
03A,2-49	49	N.C
03A,2-50	50	N.C
03A,2-51	51	B SSW 0
IF-403A,2-52	52	B SSW 1
IF-403A,2-53	53	B SSW 2
IF-403A,2-54	54	B SSW 3
03A,2-55	55	C SLED 0
03A,2-56	56	C SLED 0
03A,2-57	57	C SLED 1
IF-403A,2-58	58	C SLED 1
IF-403A,2-59	59	C SLED 2
IF 03A,2-60	60	C SLED 2
03A,2-61	61	C SLED 3
03A,2-62	62	C SLED 3
03A,2-63	63	C SLED 4
IF-403A,2-64	64	C SLED 4
IF-403A,2-65	65	C SLED 5
IF 03A,2-66	66	C SLED 5
03A,2-67	67	C SLED 6
03A,2-68	68	C SLED 6
03A,2-69	69	C SLED 7
IF-403A,2-70	70	C SLED 7
IF-403A,2-71	71	C LED 0
03A,2-72	72	C LED 1
03A,2-73	73	C LED 2
03A,2-74	74	C LED 3
IF-403A,2-75	75	C LED 4
IF-403A,2-76	76	C LED 5
IF-403A,2-77	77	C LED 6
03A,2-78	78	C LED 7
03A,2-79	79	A LED 4
03A,2-80	80	N.C

LE-111

CN7		CN1	
C-SLED3	1	1	SLED3
C-LED4	2	2	LED4
C-LED3	3	3	LED3
C-LED2	4	4	LED2
C-LED7	5	5	LED7
N.C	6	6	N.C

CN6		CN2	
C-LED5	1	1	LED5
C-LED0	2	2	LED0
C-LED1	3	3	LED1
C-LED6	4	4	LED6
C-SLED2	5	5	SLED2
C-SLED1	6	6	SLED1

LE-112

CN9		CN1	
C-SLED5	1	1	SLED5
C-SLED4	2	2	SLED4
C-LED0	3	3	LED0
C-LED1	4	4	LED1
C-LED2	5	5	LED2
C-LED3	6	6	LED3
C-LED4	7	7	LED4
C-LED5	8	8	LED5
C-LED6	9	9	LED6
C-LED7	10	10	LED7
C-SLED7	11	11	SLED7
C-SLED6	12	12	SLED6

FROM IF-403B CN2

KY-239B(M/ E2)

(SAME AS KY-239A(M/E1))

KY-240

CN3

1	CN790,106-1	1	GND
2	CN790,106-2	2	GND
3	CN790,106-3	3	+5V
4	CN790,106-4	4	+5V
0	CN790,106-5	5	+12V
6	CN790,106-6	6	+12V

CN4

50P FLAT CABLE

CPU-131,4-1	1	GND
CPU-131,4-2	2	GND
CPU-131,4-3	3	GND
CPU-131,4-4	4	A0
CPU-131,4-5	5	GND
CPU-131,4-6	6	A1
CPU-131,4-7	7	GND
CPU-131,4-8	8	A2
CPU-131,4-9	9	GND
CPU-131,4-10	10	A3
CPU-131,4-11	11	GND
CPU-131,4-12	12	A4
CPU-131,4-13	13	GND
CPU-131,4-14	14	A5
CPU-131,4-15	15	GND
CPU-131,4-16	16	A6
CPU-131,4-17	17	GND
CPU-131,4-18	18	A7
CPU-131,4-19	19	GND
CPU-131,4-20	20	D0
CPU-131,4-21	21	GND
CPU-131,4-22	22	D1
CPU-131,4-23	23	GND
CPU-131,4-24	24	D2
CPU-131,4-25	25	GND
CPU-131,4-26	26	D3
CPU-131,4-27	27	GND
CPU-131,4-28	28	D4
CPU-131,4-29	29	GND
CPU-131,4-30	30	D5
CPU-131,4-31	31	GND
CPU-131,4-32	32	D6
CPU-131,4-33	33	GND
CPU-131,4-34	34	D7
CPU-131,4-35	35	GND
CPU-131,4-36	36	$\overline{IOWR}$
CPU-131,4-37	37	GND
CPU-131,4-38	38	$\overline{IORD}$
CPU-131,4-39	39	GND
CPU-131,4-40	40	$\overline{RST}$(+)
CPU-131,4-41	41	$\overline{RST}$(-)
CPU-131,4-42	42	GND
CPU-131,4-43	43	CLK(+)
CPU-131,4-44	44	CLK(-)
CPU-131,4-45	45	GND
CPU-131,4-46	46	PANEL RESET
CPU-131,4-47	47	GND
CPU-131,4-48	48	KF EXIST
CPU-131,4-49	49	GND
CPU-131,4-50	50	GND

CN6

B-SW4	1	1	1 B-SW4
B-SW3	2	2	2 B-SW3
B-SW2	3	3	3 B-SW2
B-SW1	4	4	4 B-SW1
B-SW0	5	5	5 B-SW0
B-SSW4	6	6	6 B-SSW4

KY-241

CN5

B-SW5	1	1	1 B-SW5
B-SW4	2	2	2 B-SW4
B-SW3	3	3	3 B-SW3
B-SW2	4	4	4 B-SW2
B-SW1	5	5	5 B-SW1
B-SW0	6	6	6 B-SW0
B-SSW6	7	7	7 B-SSW6
B-SSW5	8	8	8 B-SSW5

KY-242

BUS1	2/3
BUS2	2/3

FRAME(2/3)

BKDS-6010

I J K L M N O P

FRAME(3/3)

IF-404

CN2

1	CN-790,103-1	1	GND
2	CN-790,103-2	2	GND
3	CN-790,103-3	3	+5V
4	CN-790,103-4	4	+5V
5	CN-790,103-5	5	+12V
6	CN-790,103-6	6	+12V

CN3

+5V	1	TO KF FADER
RV1-B	2	
RV1-A	3	
GND	4	

CN7

50P FLAT CABLE

CPU-131,4-1	1	GND
CPU-131,4-2	2	GND
CPU-131,4-3	3	GND
CPU-131,4-4	4	A0
CPU-131,4-5	5	GND
CPU-131,4-6	6	A1
CPU-131,4-7	7	GND
CPU-131,4-8	8	A2
CPU-131,4-9	9	GND
CPU-131,4-10	10	A3
CPU-131,4-11	11	GND
CPU-131,4-12	12	A4
CPU-131,4-13	13	GND
CPU-131,4-14	14	A5
CPU-131,4-15	15	GND
CPU-131,4-16	16	A6
CPU-131,4-17	17	GND
CPU-131,4-18	18	A7
CPU-131,4-19	19	GND
CPU-131,4-20	20	D0
CPU-131,4-21	21	GND
CPU-131,4-22	22	D1
CPU-131,4-23	23	GND
CPU-131,4-24	24	D2
CPU-131,4-25	25	GND
CPU-131,4-26	26	D3
CPU-131,4-27	27	GND
CPU-131,4-28	28	D4
CPU-131,4-29	29	GND
CPU-131,4-30	30	D5
CPU-131,4-31	31	GND
CPU-131,4-32	32	D6
CPU-131,4-33	33	GND
CPU-131,4-34	34	D7
CPU-131,4-35	35	GND
CPU-131,4-36	36	$\overline{IOWR}$
CPU-131,4-37	37	GND
CPU-131,4-38	38	$\overline{IORD}$
CPU-131,4-39	39	GND
CPU-131,4-40	40	$\overline{RST}$(+)
CPU-131,4-41	41	$\overline{RST}$(-)
CPU-131,4-42	42	GND
CPU-131,4-43	43	CLK(+)
CPU-131,4-44	44	CLK(-)
CPU-131,4-45	45	GND
CPU-131,4-46	46	PANEL RESET
CPU-131,4-47	47	GND
CPU-131,4-48	48	KF EXIST
CPU-131,4-49	49	GND
CPU-131,4-50	50	GND

CN1

60PIN FLAT CABLE

GND	1	KY-245,1-1
GND	2	KY-245,1-2
GND	3	KY-245,1-3
GND	4	KY-245,1-4
+5V	5	KY-245,1-5
+5V	6	KY-245,1-6
+5V	7	KY-245,1-7
+5V	8	KY-245,1-8
PANEL RESET	9	KY-245,1-9
	10	KY-245,1-10
RV1-A	11	KY-245,1-11
RV1-B	12	KY-245,1-12
RV2-A	13	KY-245,1-13
RV2-B	14	KY-245,1-14
RV3-A	15	KY-245,1-15
RV3-B	16	KY-245,1-16
RV4-A	17	KY-245,1-17
RV4-B	18	KY-245,1-18
C-SLED 1	19	KY-245,1-19
C-SLED 1	20	KY-245,1-20
C-SLED 2	21	KY-245,1-21
C-SLED 2	22	KY-245,1-22
C-SLED 3	23	KY-245,1-23
C-SLED 3	24	KY-245,1-24
C-SLED 5	25	KY-245,1-25
C-SLED 5	26	KY-245,1-26
C-SLED 6	27	KY-245,1-27
C-SLED 6	28	KY-245,1-28
C-SLED 7	29	KY-245,1-29
C-SLED 7	30	KY-245,1-30
C-SSW 1	31	KY-245,1-31
C-SSW 2	32	KY-245,1-32
C-SSW 3	33	KY-245,1-33
C-SSW 4	34	KY-245,1-34
C-LED 0	35	KY-245,1-35
C-SW 0	36	KY-245,1-36
C-LED 1	37	KY-245,1-37
C-SW 1	38	KY-245,1-38
C-LED 2	39	KY-245,1-39
C-SW 2	40	KY-245,1-40
C-LED 3	41	KY-245,1-41
C-SW 3	42	KY-245,1-42
C-LED 4	43	KY-245,1-43
C-SW 4	44	KY-245,1-44
▲ C-LED 5	45	KY-245,1-45
C-SW 5	46	KY-245,1-46
C-LED 6	47	KY-245,1-47
C-SW 6	48	KY-245,1-48
C-LED 7	49	KY-245,1-49
C-SW 7	50	KY-245,1-50
GND	51	KY-245,1-51
POS-X	52	KY-245,1-52
GND	53	KY-245,1-53
POS-Y	54	KY-245,1-54
GND	55	KY-245,1-55
NC	56	KY-245,1-56
NC	57	KY-245,1-57
NC	58	KY-245,1-58
NC	59	KY-245,1-59
NC	60	KY-245,1-60

CN6

60PIN FLAT CABLE

	1	KY-244,1-1
	2	KY-244,1-2
KF EXIST	3	KY-244,1-3
	4	KY-244,1-4
B-SLED 0	5	KY-244,1-5
B-SLED 0	6	KY-244,1-6
B-SLED 1	7	KY-244,1-7
B-SLED 1	8	KY-244,1-8
B-SLED 2	9	KY-244,1-9
B-SLED 2	10	KY-244,1-10
B-SLED 3	11	KY-244,1-11
B-SLED 3	12	KY-244,1-12
B-SLED 4	13	KY-244,1-13
B-SLED 4	14	KY-244,1-14
B-SLED 5	15	KY-244,1-15
B-SLED 5	16	KY-244,1-16
B-SLED 6	17	KY-244,1-17
B-SLED 6	18	KY-244,1-18
B-SLED 7	19	KY-244,1-19
B-SLED 7	20	KY-244,1-20
B-SSW 0	21	KY-244,1-21
B-SSW 1	22	KY-244,1-22
B-SSW 2	23	KY-244,1-23
B-SSW 3	24	KY-244,1-24
B-LED 0	25	KY-244,1-25
B-SW 0	26	KY-244,1-26
B-LED 1	27	KY-244,1-27
B-SW 1	28	KY-244,1-28
B-LED 2	29	KY-244,1-29
B-SW 2	30	KY-244,1-30
B-LED 3	31	KY-244,1-31
B-SW 3	32	KY-244,1-32
B-LED 4	33	KY-244,1-33
B-SW 4	34	KY-244,1-34
B-LED 5	35	KY-244,1-35
B-SW 5	36	KY-244,1-36
B-LED 6	37	KY-244,1-37
B-SW 6	38	KY-244,1-38
B-LED 7	39	KY-244,1-39
B-SW 7	40	KY-244,1-40
D-SLED 4	41	KY-244,1-41
D-SLED 4	42	KY-244,1-42
D-SLED 5	43	KY-244,1-43
D-SLED 5	44	KY-244,1-44
D-SLED 6	45	KY-244,1-45
D-SLED 6	46	KY-244,1-46
D-SLED 7	47	KY-244,1-47
D-SLED 7	48	KY-244,1-48
D-LED 0	49	KY-244,1-49
D-LED 1	50	KY-244,1-50
D-LED 2	51	KY-244,1-51
D-LED 3	52	KY-244,1-52
D-LED 4	53	KY-244,1-53
D-LED 5	54	KY-244,1-54
D-LED 6	55	KY-244,1-55
D-LED 7	56	KY-244,1-56
NC	57	KY-244,1-57
NC	58	KY-244,1-58
NC	59	KY-244,1-59
NC	60	KY-244,1-60

CN8

80PIN FLAT CABLE

A-SLED 0	1	KY-243,1-1
A-SLED 0	2	KY-243,1-2
A-SLED 1	3	KY-243,1-3
A-SLED 1	4	KY-243,1-4
A-SLED 2	5	KY-243,1-5
A-SLED 2	6	KY-243,1-6
A-SLED 3	7	KY-243,1-7
A-SLED 3	8	KY-243,1-8
A-SLED 4	9	KY-243,1-9
A-SLED 4	10	KY-243,1-10
A-SLED 5	11	KY-243,1-11
A-SLED 5	12	KY-243,1-12
A-SLED 6	13	KY-243,1-13
A-SLED 6	14	KY-243,1-14
A-SLED 7	15	KY-243,1-15
A-SLED 7	16	KY-243,1-16
A-SSW 0	17	KY-243,1-17
A-SSW 1	18	KY-243,1-18
A-SSW 2	19	KY-243,1-19
A-SSW 3	20	KY-243,1-20
A-SSW 4	21	KY-243,1-21
A-SSW 5	22	KY-243,1-22
A-LED 0	23	KY-243,1-23
A-SW 0	24	KY-243,1-24
A-LED 1	25	KY-243,1-25
A-SW 1	26	KY-243,1-26
A-LED 2	27	KY-243,1-27
A-SW 2	28	KY-243,1-28
A-LED 3	29	KY-243,1-29
A-SW 3	30	KY-243,1-30
A-LED 4	31	KY-243,1-31
A-SW 4	32	KY-243,1-32
A-LED 5	33	KY-243,1-33
A-SW 5	34	KY-243,1-34
A-LED 6	35	KY-243,1-35
A-SW 6	36	KY-243,1-36
A-LED 7	37	KY-243,1-37
A-SW 7	38	KY-243,1-38
B-SLED 0	39	KY-243,1-39
B-SLED 0	40	KY-243,1-40
B-SLED 4	41	KY-243,1-41
B-SLED 4	42	KY-243,1-42
B-SSW 0	43	KY-243,1-43
B-SSW 3	44	KY-243,1-44
B-LED 0	45	KY-243,1-45
B-SW 0	46	KY-243,1-46
B-LED 1	47	KY-243,1-47
B-SW 1	48	KY-243,1-48
B-LED 2	49	KY-243,1-49
B-SW 2	50	KY-243,1-50
B-LED 3	51	KY-243,1-51
B-SW 3	52	KY-243,1-52
B-LED 4	53	KY-243,1-53
B-SW 4	54	KY-243,1-54
B-LED 5	55	KY-243,1-55
B-SW 5	56	KY-243,1-56
B-LED 6	57	KY-243,1-57
B-SW 6	58	KY-243,1-58
NC	59	KY-243,1-59
NC	60	KY-243,1-60
NC	61	KY-243,1-61
NC	62	KY-243,1-62
NC	63	KY-243,1-63
NC	64	KY-243,1-64
NC	65	KY-243,1-65
NC	66	KY-243,1-66
NC	67	KY-243,1-67
NC	68	KY-243,1-68
NC	69	KY-243,1-69
NC	70	KY-243,1-70
NC	71	KY-243,1-71
NC	72	KY-243,1-72
NC	73	KY-243,1-73
NC	74	KY-243,1-74
NC	75	KY-243,1-75
NC	76	KY-243,1-76
NC	77	KY-243,1-77
NC	78	KY-243,1-78
NC	79	KY-243,1-79
NC	80	KY-243,1-80

CN9

80P BOARD TO BOARD CONNECTOR

GND	1	
GND	2	
GND	3	
GND	4	
+5V	5	
+5V	6	
+5V	7	
+5V	8	
$\overline{RST}$	9	
$\overline{IOWR}$	10	
A0	11	
A1	12	
A2	13	
$\overline{CS9}$	14	
$\overline{CS10}$	15	
$\overline{CS11}$	16	
D0	17	
D1	18	
D2	19	
D3	20	
D4	21	
D5	22	
D6	23	
	24	
C-SLED 0	25	
C-SLED 0	26	
C-SLED 1	27	
C-SLED 1	28	
C-SLED 4	29	
C-SLED 4	30	
C-SLED 5	31	
C-SLED 5	32	
C-SSW 0	33	
C-SSW 1	34	
C-LED 0	35	
C-SW 0	36	
C-LED 1	37	
C-SW 1	38	
C-LED 2	39	
C-SW 2	40	
C-LED 3	41	
C-SW 3	42	
C-LED 4	43	
C-SW 4	44	
C-LED 5	45	
C-SW 5	46	
C-LED 6	47	
C-SW 6	48	
C-LED 7	49	
C-SW 7	50	
D-SLED 0	51	
D-SLED 0	52	
D-SLED 1	53	
D-SLED 1	54	
D-SLED 2	55	
D-SLED 2	56	
D-SLED 3	57	
D-SLED 3	58	
D-SSW 0	59	
D-SSW 1	60	
D-SSW 2	61	
NC	62	
D-LED 0	63	
D-SW 0	64	
D-LED 1	65	
D-SW 1	66	
D-LED 2	67	
D-SW 2	68	
D-LED 3	69	
D-SW 3	70	
D-LED 4	71	
D-SW 4	72	
D-LED 5	73	
D-SW 5	74	
D-LED 6	75	
D-SW 6	76	
D-LED 7	77	
NC	78	
NC	79	
NC	80	

80P BOARD TO BOARD CONNECTOR

KY-243

CN1

80PIN FLAT CABLE

1	GND	IF-404,8-1
2	GND	IF-404,8-2
3	GND	IF-404,8-3
4	GND	IF-404,8-4
5	+5V	IF-404,8-5
6	+5V	IF-404,8-6
7	+5V	IF-404,8-7
8	+5V	IF-404,8-8
9	$\overline{RST}$	IF-404,8-9
10	$\overline{IOWR}$	IF-404,8-10
11	A0	IF-404,8-11
12	A1	IF-404,8-12
13	A2	IF-404,8-13
14	$\overline{CS9}$	IF-404,8-14
15	$\overline{CS10}$	IF-404,8-15
16	$\overline{CS11}$	IF-404,8-16
17	D0	IF-404,8-17
18	D1	IF-404,8-18
19	D2	IF-404,8-19
20	D3	IF-404,8-20
21	D4	IF-404,8-21
22	D5	IF-404,8-22
23	D6	IF-404,8-23
24		IF-404,8-24
25	C-SLED 0	IF-404,8-25
26	C-SLED 0	IF-404,8-26
27	C-SLED 1	IF-404,8-27
28	C-SLED 1	IF-404,8-28
29	C-SLED 4	IF-404,8-29
30	C-SLED 4	IF-404,8-30
31	C-SLED 5	IF-404,8-31
32	C-SLED 5	IF-404,8-32
33	C-SSW 0	IF-404,8-33
34	C-SSW 1	IF-404,8-34
35	C-LED 0	IF-404,8-35
36	C-SW 0	IF-404,8-36
37	C-LED 1	IF-404,8-37
38	C-SW 1	IF-404,8-38
39	C-LED 2	IF-404,8-39
40	C-SW 2	IF-404,8-40
41	C-LED 3	IF-404,8-41
42	C-SW 3	IF-404,8-42
43	C-LED 4	IF-404,8-43
44	C-SW 4	IF-404,8-44
45	C-LED 5	IF-404,8-45
46	C-SW 5	IF-404,8-46
47	C-LED 6	IF-404,8-47
48	C-SW 6	IF-404,8-48
49	C-LED 7	IF-404,8-49
50	C-SW 7	IF-404,8-50
51	D-SLED 0	IF-404,8-51
52	D-SLED 0	IF-404,8-52
53	D-SLED 1	IF-404,8-53
54	D-SLED 1	IF-404,8-54
55	D-SLED 2	IF-404,8-55
56	D-SLED 2	IF-404,8-56
57	D-SLED 3	IF-404,8-57
58	D-SLED 3	IF-404,8-58
59	D-SSW 0	IF-404,8-59
60	D-SSW 1	IF-404,8-60
61	D-SSW 2	IF-404,8-61
62	NC	IF-404,8-62
63	D-LED 0	IF-404,8-63
64	D-SW 0	IF-404,8-64
65	D-LED 1	IF-404,8-65
66	D-SW 1	IF-404,8-66
67	D-LED 2	IF-404,8-67
68	D-SW 2	IF-404,8-68
69	D-LED 3	IF-404,8-69
70	D-SW 3	IF-404,8-70
71	D-LED 4	IF-404,8-71
72	D-SW 4	IF-404,8-72
73	D-LED 5	IF-404,8-73
74	D-SW 5	IF-404,8-74
75	D-LED 6	IF-404,8-75
76	D-SW 6	IF-404,8-76
77	D-LED 7	IF-404,8-77
78	NC	IF-404,8-78
79	NC	IF-404,8-79
80	NC	IF-404,8-80

2/3	BUS2	
2/3	BUS1	

A B C D E F G H

KY-243

		CN2	
IF-404,8-1	1	1	A-SLED 0
IF-404,8-2	2	2	A-SLED 0
IF-404,8-3	3	3	A-SLED 1
IF-404,8-4	4	4	A-SLED 1
IF-404,8-5	5	5	A-SLED 2
IF-404,8-6	6	6	A-SLED 2
IF-404,8-7	7	7	A-SLED 3
IF-404,8-8	8	8	A-SLED 3
IF-404,8-9	9	9	A-SLED 4
IF-404,8-10	10	10	A-SLED 4
IF-404,8-11	11	11	A-SLED 5
IF-404,8-12	12	12	A-SLED 5
IF-404,8-13	13	13	A-SLED 6
IF-404,8-14	14	14	A-SLED 6
IF-404,8-15	15	15	A-SLED 7
IF-404,8-16	16	16	A-SLED 7
IF-404,8-17	17	17	A-SSW 0
IF-404,8-18	18	18	A-SSW 1
IF-404,8-19	19	19	A-SSW 2
IF-404,8-20	20	20	A-SSW 3
IF-404,8-21	21	21	A-SSW 4
IF-404,8-22	22	22	A-SSW 5
IF-404,8-23	23	23	A-LED 0
IF-404,8-24	24	24	A-SW 0
IF-404,8-25	25	25	A-LED 1
IF-404,8-26	26	26	A-SW 1
IF-404,8-27	27	27	A-LED 2
IF-404,8-28	28	28	A-SW 2
IF-404,8-29	29	29	A-LED 3
IF-404,8-30	30	30	A-SW 3
IF-404,8-31	31	31	A-LED 4
IF-404,8-32	32	32	A-SW 4
IF-404,8-33	33	33	A-LED 5
IF-404,8-34	34	34	A-SW 5
IF-404,8-35	35	35	A-LED 6
IF-404,8-36	36	36	A-SW 6
IF-404,8-37	37	37	A-LED 7
IF-404,8-38	38	38	A-SW 7
IF-404,8-39	39	39	B-SLED 0
IF-404,8-40	40	40	B-SLED 0
IF-404,8-41	41	41	B-SLED 4
IF-404,8-42	42	42	B-SLED 4
IF-404,8-43	43	43	B-SSW 0
IF-404,8-44	44	44	B-SSW 3
IF-404,8-45	45	45	B-LED 0
IF-404,8-46	46	46	B-SW 0
IF-404,8-47	47	47	B-LED 1
IF-404,8-48	48	48	B-SW 1
IF-404,8-49	49	49	B-LED 2
IF-404,8-50	50	50	B-SW 2
IF-404,8-51	51	51	B-LED 3
IF-404,8-52	52	52	B-SW 3
IF-404,8-53	53	53	B-LED 4
IF-404,8-54	54	54	B-SW 4
IF-404,8-55	55	55	B-LED 5
IF-404,8-56	56	56	B-SW 5
IF-404,8-57	57	57	B-LED 6
IF-404,8-58	58	58	B-SW 6
IF-404,8-59	59	59	NC
IF-404,8-60	60	60	NC
IF-404,8-61	61	61	NC
IF-404,8-62	62	62	NC
IF-404,8-63	63	63	NC
IF-404,8-64	64	64	NC
IF-404,8-65	65	65	NC
IF-404,8-66	66	66	NC
IF-404,8-67	67	67	NC
IF-404,8-68	68	68	NC
IF-404,8-69	69	69	NC
IF-404,8-70	70	70	NC
IF-404,8-71	71	71	NC
IF-404,8-72	72	72	NC
IF-404,8-73	73	73	NC
IF-404,8-74	74	74	NC
IF-404,8-75	75	75	NC
IF-404,8-76	76	76	NC
IF-404,8-77	77	77	NC
IF-404,8-78	78	78	NC
IF-404,8-79	79	79	NC
IF-404,8-80	80	80	NC

80PIN FLAT CABLE

LE-114

CN3		CN1	
D-SLED 3	1	1	SLED 3
D-LED 4	2	2	LED 4
D-LED 3	3	3	LED 3
D-LED 2	4	4	LED 2
D-LED 7	5	5	LED 7
NC	6	6	NC

CN4		CN2	
D-LED 5	1	1	LED 5
D-LED 0	2	2	LED 0
D-LED 1	3	3	LED 1
D-LED 6	4	4	LED 6
D-SLED 2	5	5	SLED 2
D-SLED 1	6	6	SLED 1

LE-113

CN5		CN1	
$\overline{RST}$	1	1	$\overline{RST}$
$\overline{IOWR}$	2	2	$\overline{IOWR}$
A0	3	3	A0
A1	4	4	A1
A2	5	5	A2
$\overline{CS1}$	6	6	$\overline{CS1}$
$\overline{CS2}$	7	7	$\overline{CS2}$
$\overline{CS3}$	8	8	$\overline{CS3}$
NC	9	9	NC
NC	10	10	NC

CN6		CN2	
D0	1	1	D0
D1	2	2	D1
D2	3	3	D2
D3	4	4	D3
D4	5	5	D4
D5	6	6	D5
D6	7	7	D6
NC	8	8	NC
+5V	9	9	+5V
GND	10	10	GND

KY-244

		CN1	
IF-404,6-1	1	1	
IF-404,6-2	2	2	
IF-404,6-3	3	3	KF EXIST
IF-404,6-4	4	4	
IF-404,6-5	5	5	B-SLED 0
IF-404,6-6	6	6	B-SLED 0
IF-404,6-7	7	7	B-SLED 1
IF-404,6-8	8	8	B-SLED 1
IF-404,6-9	9	9	B-SLED 2
IF-404,6-10	10	10	B-SLED 2
IF-404,6-11	11	11	B-SLED 3
IF-404,6-12	12	12	B-SLED 3
IF-404,6-13	13	13	B-SLED 4
IF-404,6-14	14	14	B-SLED 4
IF-404,6-15	15	15	B-SLED 5
IF-404,6-16	16	16	B-SLED 5
IF-404,6-17	17	17	B-SLED 6
IF-404,6-18	18	18	B-SLED 6
IF-404,6-19	19	19	B-SLED 7
IF-404,6-20	20	20	B-SLED 7
IF-404,6-21	21	21	B-SSW 0
IF-404,6-22	22	22	B-SSW 1
IF-404,6-23	23	23	B-SSW 2
IF-404,6-24	24	24	B-SSW 3
IF-404,6-25	25	25	B-LED 0
IF-404,6-26	26	26	B-SW 0
IF-404,6-27	27	27	B-LED 1
IF-404,6-28	28	28	B-SW 1
IF-404,6-29	29	29	B-LED 2
IF-404,6-30	30	30	B-SW 2
IF-404,6-31	31	31	B-LED 3
IF-404,6-32	32	32	B-SW 3
IF-404,6-33	33	33	B-LED 4
IF-404,6-34	34	34	B-SW 4
IF-404,6-35	35	35	B-LED 5
IF-404,6-36	36	36	B-SW 5
IF-404,6-37	37	37	B-LED 6
IF-404,6-38	38	38	B-SW 6
IF-404,6-39	39	39	B-LED 7
IF-404,6-40	40	40	B-SW 7
IF-404,6-41	41	41	D-SLED 4
IF-404,6-42	42	42	D-SLED 4
IF-404,6-43	43	43	D-SLED 5
IF-404,6-44	44	44	D-SLED 5
IF-404,6-45	45	45	D-SLED 6
IF-404,6-46	46	46	D-SLED 6
IF-404,6-47	47	47	D-SLED 7
IF-404,6-48	48	48	D-SLED 7
IF-404,6-49	49	49	D-LED 0
IF-404,6-50	50	50	D-LED 1
IF-404,6-51	51	51	D-LED 2
IF-404,6-52	52	52	D-LED 3
IF-404,6-53	53	53	D-LED 4
IF-404,6-54	54	54	D-LED 5
IF-404,6-55	55	55	D-LED 6
IF-404,6-56	56	56	D-LED 7
IF-404,6-57	57	57	NC
IF-404,6-58	58	58	NC
IF-404,6-59	59	59	NC
IF-404,6-60	60	60	NC

LE-115

CN2		CN1	
D-SLED 5	1	1	SLED 5
D-SLED 4	2	2	SLED 4
D-LED 0	3	3	LED 0
D-LED 1	4	4	LED 1
D-LED 2	5	5	LED 2
D-LED 3	6	6	LED 3
D-LED 4	7	7	LED 4
D-LED 5	8	8	LED 5
D-LED 6	9	9	LED 6
D-LED 7	10	10	LED 7
D-SLED 7	11	11	SLED 7
D-SLED 6	12	12	SLED 6

KY-245

		CN1	
IF-404,1-1	1	1	GND
IF-404,1-2	2	2	GND
IF-404,1-3	3	3	GND
IF-404,1-4	4	4	GND
IF-404,1-5	5	5	+5V
IF-404,1-6	6	6	+5V
IF-404,1-7	7	7	+5V
IF-404,1-8	8	8	+5V
IF-404,1-9	9	9	PANEL RESET
IF-404,1-10	10	10	
IF-404,1-11	11	11	RV1-A
IF-404,1-12	12	12	RV1-B
IF-404,1-13	13	13	RV2-A
IF-404,1-14	14	14	RV2-B
IF-404,1-15	15	15	RV3-A
IF-404,1-16	16	16	RV3-B
IF-404,1-17	17	17	RV4-A
IF-404,1-18	18	18	RV4-B
IF-404,1-19	19	19	C-SLED 1
IF-404,1-20	20	20	C-SLED 1
IF-404,1-21	21	21	C-SLED 2
IF-404,1-22	22	22	C-SLED 2
IF-404,1-23	23	23	C-SLED 3
IF-404,1-24	24	24	C-SLED 3
IF-404,1-25	25	25	C-SLED 5
IF-404,1-26	26	26	C-SLED 5
IF-404,1-27	27	27	C-SLED 6
IF-404,1-28	28	28	C-SLED 6
IF-404,1-29	29	29	C-SLED 7
IF-404,1-30	30	30	C-SLED 7
IF-404,1-31	31	31	C-SSW 1
IF-404,1-32	32	32	C-SSW 2
IF-404,1-33	33	33	C-SSW 3
IF-404,1-34	34	34	C-SSW 4
IF-404,1-35	35	35	C-LED 0
IF-404,1-36	36	36	C-SW 0
IF-404,1-37	37	37	C-LED 1
IF-404,1-38	38	38	C-SW 1
IF-404,1-39	39	39	C-LED 2
IF-404,1-40	40	40	C-SW 2
IF-404,1-41	41	41	C-LED 3
IF-404,1-42	42	42	C-SW 3
IF-404,1-43	43	43	C-LED 4
IF-404,1-44	44	44	C-SW 4
IF-404,1-45	45	45	C-LED 5
IF-404,1-46	46	46	C-SW 5
IF-404,1-47	47	47	C-LED 6
IF-404,1-48	48	48	C-SW 6
IF-404,1-49	49	49	C-LED 7
IF-404,1-50	50	50	C-SW 7
IF-404,1-51	51	51	GND
IF-404,1-52	52	52	POS-X
IF-404,1-53	53	53	GND
IF-404,1-54	54	54	POS-Y
IF-404,1-55	55	55	GND
IF-404,1-56	56	56	NC
IF-404,1-57	57	57	NC
IF-404,1-58	58	58	NC
IF-404,1-59	59	59	NC
IF-404,1-60	60	60	NC

CN3		
+5V	1	TO RV1
RV1-B	2	
RV1-A	3	
GND	4	

CN4		
+5V	1	TO RV2
RV2-B	2	
RV2-A	3	
GND	4	

CN5		
+5V	1	TO RV3
RV3-B	2	
RV3-A	3	
GND	4	

CN6		
+5V	1	TO RV4
RV4-B	2	
RV4-A	3	
GND	4	

CN2		CN1	
+5V	1	1	+5V
POS-X	2	2	POS-X
POS-Y	3	3	POS-Y
GND	4	4	GND

KY-246

60P FLAT CABLE
60P FLAT CABLE

FRAME(3/3)
BKDS-6010

SONY

DIGITAL VIDEO SWITCHER

DVS-6000/6000C

SWITCHER CONTROL PANEL

BKDS-6010

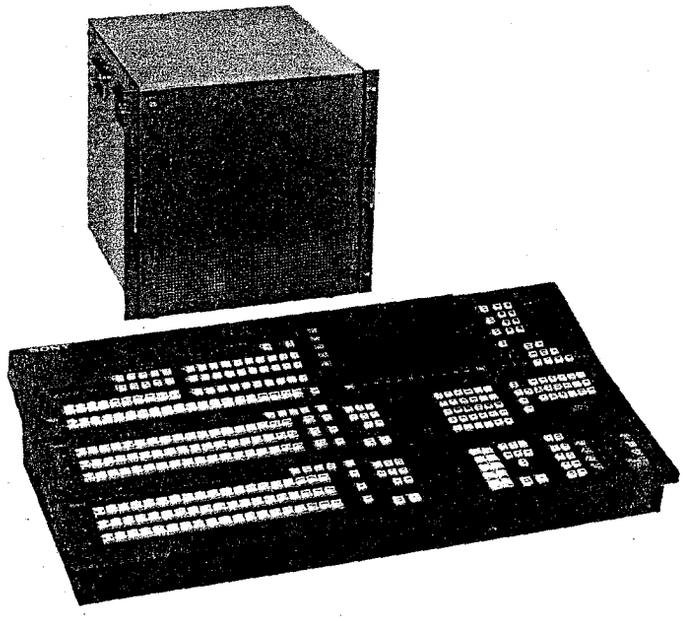

BKDS-6050 BKDS-6060 BKDS-6061 BKDS-6062
BKDS-6063 BKDS-6064 BKDS-6070 BKDS-6071
BKDS-6072 BKDS-6090 BKDS-8022

INSTALLATION AND MAINTENANCE MANUAL Part 2
1st Edition
Serial No. 10001 and Higher

For customers in the U.S.A.

WARNING

This equipment has been tested and found to comply with the limits for a Class A digital device, pursuant to Part 15 of the FCC Rules. These limits are designed to provide reasonable protection against harmful interference when the equipment is operated in a commercial environment. This equipment generates, uses, and can radiate radio frequency energy and, if not installed and used in accordance with the instruction manual, may cause harmful interference to radio communications. Operation of this equipment in a residential area is likely to cause harmful interference in which case the user will be required to correct the interference at his own expense.

You are cautioned that any changes or modifications not expressly approved in this manual could void your authority to operate this equipment.

The shielded interface cable recommended in this manual must be used with this equipment in order to comply with the limits for a digital device pursuant to Subpart B of Part 15 of FCC rules.

This symbol is intended to alert the user to the presence of important operating and maintenance (servicing) instructions in the literature accompanying the appliance.

WARNING
For the customers in the U.S.A.

Changing the voltage selector may require the use of a different line cord or attachment plug, or both. To reduce the risk of fire or electric shock, refer servicing to qualified service personnel.

For the customers in Canada
This apparatus complies with the Class A limits for radio noise emissions set out in radio interference regulations.

Pour les utilisateurs au Canada
Cet appareil est conforme aux normes Classe A, pour bruits radioélectriques. Tel que spécifiér dans le reglement sur le brouillage radioélectrique.

Bescheinigung des Herstellers
Hiermit wird bescheinigt, daß die Digital-Video-Schalteinheit DVS-6000C in Übereinstimmung mit den Bestimmungen der BMPT-Amtsblatt Vfg 243/1991 und Vfg 46/1992 funkenstört ist. Der vorschriftsmäßige Betrieb mancher Geräte (z.B.Meßsender) kann allerdings gewissen Einschränkungen unterliegen. Beachten Sie deshalb die Hinweise in der Bedienungsanleitung. Dem Bundesamt für Zulassungen in der Telekommunikation wurde das inverkehrbringen dieses Gerätes angezeigt und die Berechtigung zur Überprüfung der Serie auf Einhaltung der Bestmmungen eingeräumt.

Sony Deutschland GmbH
Hugo Eckener Str 20
D-5000 Köin 30

Hinweis
Gemäß der Amtsblätter des BMPT Nm. 61/1991 und 6/1992 wird der Betreiber darauf aufmerksam gemacht, daß die von ihm mit diesem Gerät zusammengestellte Anlage auch den technischen Bestimmungen dieser Amtsblätter genügen muß.

SECTION 7
BOARD LAYOUTS

	Board	Function	Page
C	CN-789	Connector Board	7-27
	CN-790	Connector Board	7-28
	CPU-131	System Control Board	7-2
I	IF-403	Switch Interface Board(For KY-239)	7-4
	IF-404	Switch Interface Board(For KY-243)	7-6
	IF-418	Interface Board	7-9
K	KY-238	Switch Board	7-10
	KY-239	Switch Board	7-12
	KY-240	Switch Board	7-14
	KY-241	Switch Board	7-16
	KY-242	Switch Board	7-17
	KY-243	Switch Board	7-18
	KY-244	Switch Board	7-20
	KY-245	Switch Board	7-22
	KY-246	Switch Board	7-24
L	LE-111	LED Board	7-25
	LE-112	LED Board	7-25
	LE-113	LED Board	7-25
	LE-114	LED Board	7-26
	LE-115	LED Board	7-26

CPU-131;System Control Board

CPU-131(1-646-591-12)

BZ1	K-18	IC26	N-13	IC112	G-3
		IC27	L-11	IC113	H-3
CN112	G-13	IC28	J-11	IC114	E-6
CN113	F-8	IC29	J-12	IC115	P-4
CN114	G-9	IC30	K-12	IC116	F-7
CN115	G-10	IC31	J-13	IC117	E-7
CN116	E-8	IC32	H-13	IC118	G-6
CN117	E-9	IC33	H-12	IC119	G-4
CN118	E-10	IC34	J-17	IC120	G-7
CN134	J-17	IC35	H-19	IC121	L-18
CN137	J-14	IC36	J-19	IC122	D-4
CN138	J-16	IC37	J-14	IC123	H-5
CN147	E-14	IC38	J-16	IC124	C-3
CN148	D-16	IC39	H-14	IC125	C-2
CN149	D-17	IC40	G-15	IC126	D-2
CN150	D-19	IC41	G-16	IC128	A-3
CN151	B-14	IC42	G-19		
CN152	B-16	IC43	F-14	RB1	F-7
CN153	B-17	IC44	F-15	RB2	G-8
CN154	B-19	IC45	F-16	RB3	F-10
CN181	J-9	IC46	F-19	RB4	K-16
CN185	M-3	IC47	E-14	RB5	E-3
CN198	J-6	IC48	D-16	RB6	L-7
CN1103	E-12	IC49	D-17	RB7	L-10
CN1105	E-10	IC50	D-19	RB8	J-8
CN1109	B-5	IC51	B-14	RB9	L-4
CN1119	G-4	IC52	B-16	RB10	L-7
		IC53	B-17	RB11	J-4
CN1	A-11	IC54	B-19	RB12	D-11
CN2	F-1	IC55	M-12	RB13	F-6
CN3	K-2	IC56	H-7	RB14	D-6
CN4	D-1	IC57	M-18	RB15	G-6
CN5	M-1	IC58	L-14	RB16	G-4
CN6	Q-4	IC59	M-13	RB17	A-3
CN7	A-14	IC60	N-16	RB18	C-2
CN8	Q-11	IC61	P-19	RB19	D-2
		IC62	N-16	RB20	F-5
D2	B-10	IC64	M-18	RB21	F-13
D3	B-10	IC65	J-3	RB22	G-14
D4	M-19	IC66	L-16	RB23	G-13
D5	N-19	IC67	M-16	RB24	G-10
D6	N-19	IC68	L-16	RB25	K-10
D7	N-19	IC69	F-3	RB26	M-12
D8	P-19	IC70	M-3	RB27	N-13
D9	M-17	IC71	K-3	RB28	K-12
D10	K-3	IC72	P-8	RB29	H-14
D11	H-4	IC73	M-8	RB30	H-13
D12	H-4	IC74	M-9	RB31	H-12
D13	M-19	IC75	M-9		
		IC76	M-10	S1	A-8
E1	E-4	IC77	L-8	S2	A-9
E2	H-4	IC78	L-9	S3	L-17
E3	N-4	IC79	J-7	S4	D-13
E4	C-9	IC80	K-7	S5	B-4
E5	H-9	IC81	J-9		
E6	N-10	IC82	J-10	TP1	B-11
E7	F-13	IC83	K-10	TP2	D-11
E8	M-14	IC84	N-3	TP3	C-8
E9	F-16	IC85	M-3	TP4	F-12
E10	K-18	IC86	P-3	TP5	F-13
		IC87	P-2	TP7	K-14
IC2	C-8	IC88	M-3	TP8	K-14
IC3	B-8	IC89	N-5	TP9	L-3
IC4	B-10	IC90	M-4	TP10	K-3
IC5	B-9	IC91	M-5	TP11	H-6
IC6	B-11	IC92	M-6	TP12	H-6
IC7	D-10	IC93	M-7		
IC8	D-9	IC94	L-5	X1	C-11
IC9	D-7	IC95	L-6	X2	C-10
IC10	D-11	IC96	J-7	X3	Q-17
IC11	C-9	IC97	K-6	X5	D-5
IC12	G-13	IC98	J-6		
IC13	F-8	IC99	J-4		
IC14	G-9	IC100	K-4		
IC15	G-10	IC101	D-13		
IC16	E-8	IC102	E-13		
IC17	E-9	IC103	E-12		
IC18	E-10	IC104	D-12		
IC19	H-8	IC105	E-10		
IC20	H-11	IC106	D-12		
IC21	M-11	IC107	B-7		
IC22	N-11	IC108	D-7		
IC23	N-10	IC109	B-5		
IC24	K-11	IC110	C-5		
IC25	L-12	IC111	D-3		

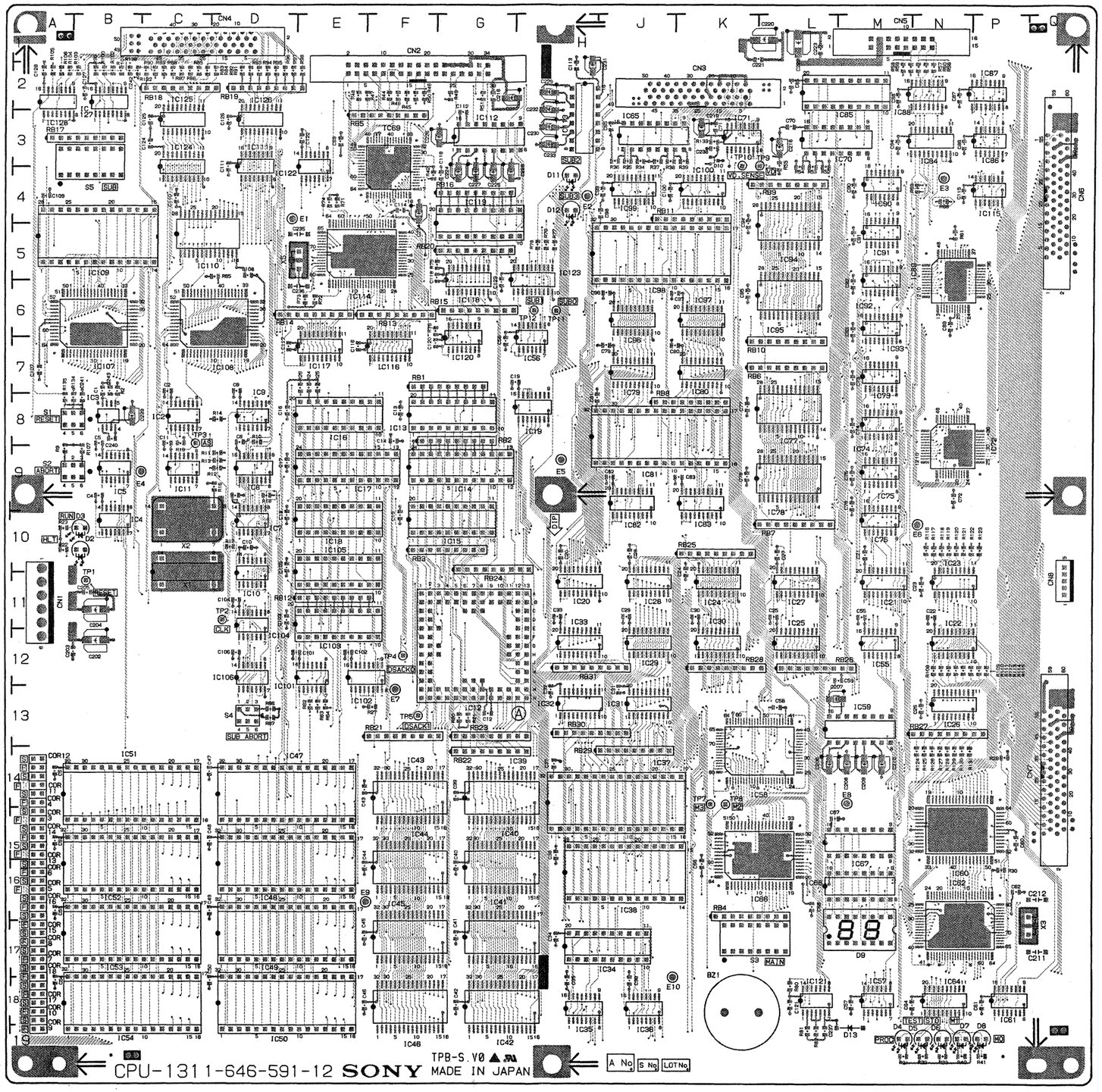

CPU-131 -A SIDE-
1-646-591-12
BKDS-6010

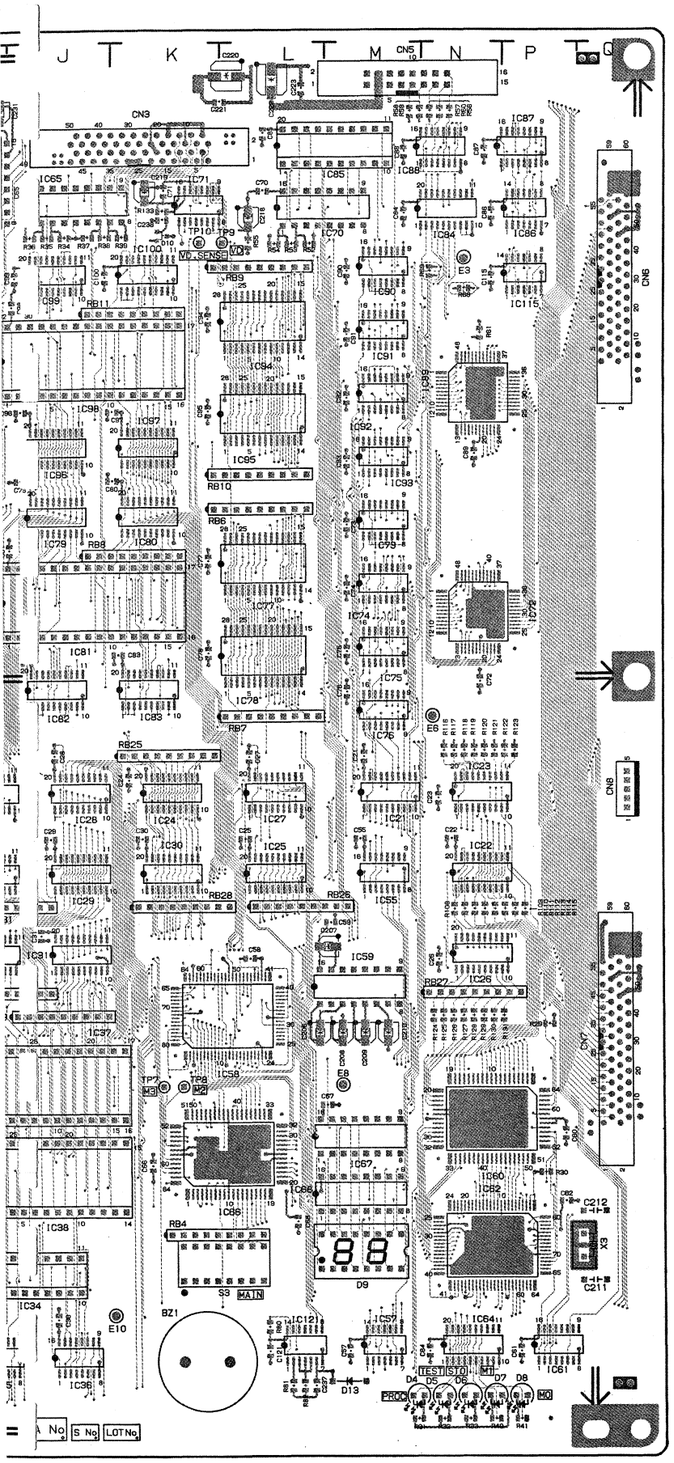

CPU-131 -A SIDE-

1-646-591-12

BKDS-6010

CPU-131;System Control Board

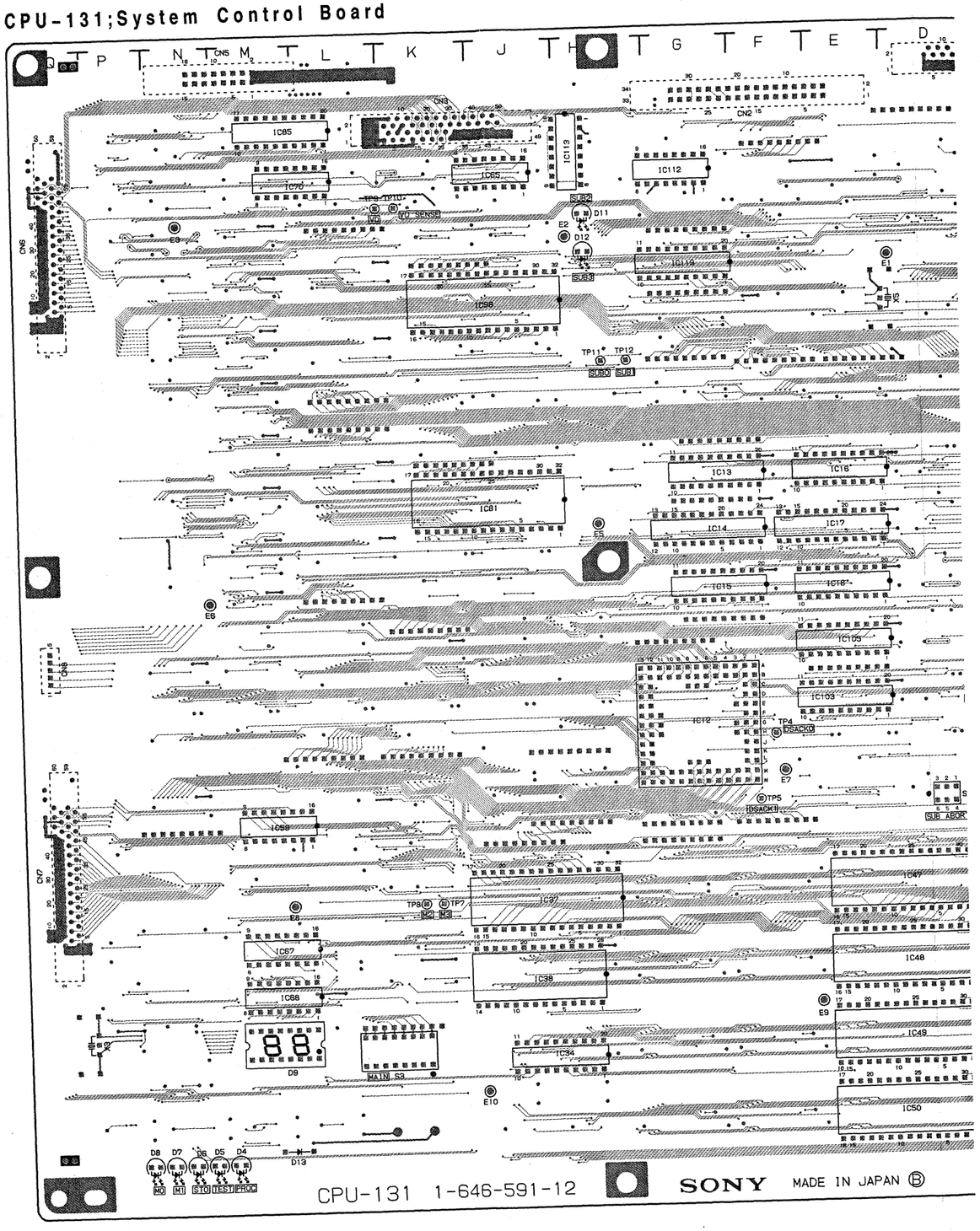

CPU-131;System Control Board

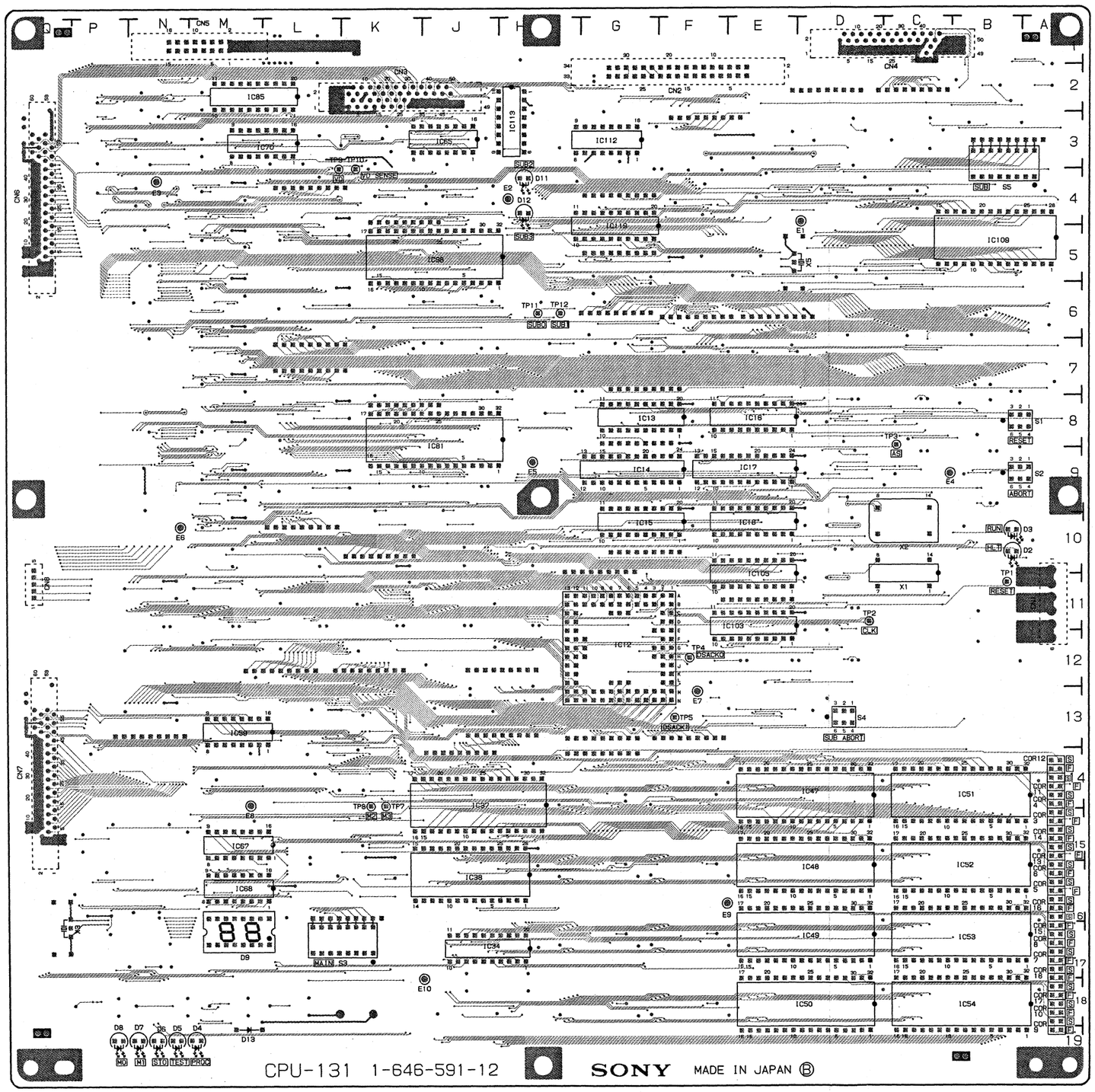

CPU-131(1-646-591-12)

BZ1	K-8	IC27	L-11	IC114	E-6
		IC28	J-11	IC115	P-4
CN112	G-13	IC29	J-12	IC116	F-7
CN113	F-8	IC30	K-12	IC117	E-7
CN114	G-9	IC31	J-13	IC118	G-6
CN115	G-10	IC32	H-13	IC119	G-4
CN116	E-8	IC33	H-12	IC120	G-7
CN117	E-9	IC34	J-17	IC121	L-18
CN118	E-10	IC35	H-19	IC122	D-4
CN134	J-17	IC36	J-19	IC123	H-5
CN137	J-14	IC37	J-14	IC124	C-3
CN138	J-16	IC38	J-16	IC125	C-2
CN147	E-14	IC39	H-14	IC126	D-2
CN148	D-16	IC40	G-15	IC128	A-3
CN149	D-17	IC41	G-16		
CN150	D-19	IC42	G-19	RB1	F-7
CN151	B-14	IC43	F-14	RB2	G-8
CN152	B-16	IC44	F-15	RB3	F-10
CN153	B-17	IC45	F-16	RB4	K-16
CN154	B-19	IC46	F-19	RB5	E-3
CN181	J-9	IC47	E-14	RB6	L-7
CN185	M-3	IC48	D-16	RB7	L-10
CN198	J-6	IC49	D-17	RB8	J-8
CN1103	E-12	IC50	D-19	RB9	L-4
CN1105	E-10	IC51	B-14	RB10	L-7
CN1109	B-5	IC52	B-16	RB11	J-4
CN1119	G-4	IC53	B-17	RB12	D-11
		IC54	B-19	RB13	F-6
CN1	A-11	IC55	M-12	RB14	D-6
CN2	F-1	IC56	H-7	RB15	G-6
CN3	K-2	IC57	M-18	RB16	G-4
CN4	D-1	IC58	L-14	RB17	A-3
CN5	M-1	IC59	M-13	RB18	C-2
CN6	Q-4	IC60	N-16	RB19	D-2
CN7	A-14	IC61	P-19	RB20	F-5
CN8	Q-11	IC62	N-16	RB21	F-13
		IC64	M-18	RB22	G-14
D2	B-10	IC65	J-3	RB23	G-13
D3	B-10	IC66	L-16	RB24	G-10
D4	M-19	IC67	M-16	RB25	K-10
D5	N-19	IC68	L-16	RB26	M-12
D6	N-19	IC69	F-3	RB27	N-13
D7	N-19	IC70	M-3	RB28	K-12
D8	P-19	IC71	K-3	RB29	H-14
D9	M-17	IC72	P-8	RB30	H-13
D10	K-3	IC73	M-8	RB31	H-12
D11	H-4	IC74	M-9		
D12	H-4	IC75	M-9	S1	A-8
D13	M-19	IC76	M-10	S2	A-9
		IC77	L-8	S3	L-17
E1	E-4	IC78	L-9	S4	D-13
E2	H-4	IC79	J-7	S5	B-4
E3	N-4	IC80	K-7		
E4	C-9	IC81	J-9	TP1	B-11
E5	H-9	IC82	J-10	TP2	D-11
E6	N-10	IC83	K-10	TP3	C-8
E7	F-13	IC84	N-3	TP4	F-12
E8	M-14	IC85	M-3	TP5	F-13
E9	F-16	IC86	P-3	TP7	K-14
E10	K-18	IC87	P-2	TP8	K-14
		IC88	M-3	TP9	L-3
IC2	C-8	IC89	N-5	TP10	K-3
IC3	B-8	IC90	M-4	TP11	H-6
IC4	B-10	IC91	M-5	TP12	H-6
IC5	B-9	IC92	M-6		
IC6	B-11	IC93	M-7	X1	C-11
IC7	D-10	IC94	L-5	X2	C-10
IC8	D-9	IC95	L-6	X3	Q-17
IC9	D-7	IC96	J-7	X5	D-5
IC10	D-11	IC97	K-6		
IC11	C-9	IC98	J-6		
IC12	G-13	IC99	J-4		
IC13	F-8	IC100	K-4		
IC14	G-9	IC101	D-13		
IC15	G-10	IC102	E-13		
IC16	E-8	IC103	E-12		
IC17	E-9	IC104	D-12		
IC18	E-10	IC105	E-10		
IC19	H-8	IC106	D-12		
IC20	H-11	IC107	B-7		
IC21	M-11	IC108	D-7		
IC22	N-11	IC109	B-5		
IC23	N-10	IC110	C-5		
IC24	K-11	IC111	D-3		
IC25	L-12	IC112	G-3		
IC26	N-13	IC113	H-3		

CPU-131 -B SIDE-
1-646-591-12
BKDS-6010

CPU-131;System Control Board

CPU-131(1-646-591-11)

BZ1	K-19	IC26	N-13	IC113	H-3
		IC27	L-11	IC114	E-6
CN112	G-13	IC28	J-11	IC115	P-4
CN113	F-8	IC29	J-12	IC116	F-7
CN114	G-9	IC30	K-12	IC117	E-7
CN115	G-10	IC31	J-13	IC118	G-6
CN116	E-8	IC32	H-13	IC119	G-4
CN117	E-9	IC33	H-12	IC120	G-7
CN118	E-10	IC34	J-17	IC121	L-18
CN134	J-17	IC35	H-19	IC122	D-4
CN137	J-14	IC36	J-19	IC123	H-5
CN138	J-16	IC37	J-14	IC124	C-3
CN147	E-14	IC38	J-16	IC125	C-2
CN148	D-16	IC39	H-14	IC126	D-2
CN149	D-17	IC40	G-15	IC127	B-3
CN150	D-19	IC41	G-16	IC128	A-3
CN151	B-14	IC42	G-19		
CN152	B-16	IC43	F-14	RB1	F-7
CN153	B-17	IC44	F-15	RB2	G-8
CN154	B-19	IC45	F-16	RB3	F-10
CN181	J-9	IC46	F-19	RB4	K-16
CN185	M-3	IC47	E-14	RB5	E-3
CN198	J-7	IC48	D-16	RB6	L-7
CN1103	E-12	IC49	D-17	RB7	L-10
CN1105	E-10	IC50	D-19	RB8	J-8
CN1109	B-5	IC51	B-14	RB9	L-4
CN1119	G-4	IC52	B-16	RB10	L-7
		IC53	B-17	RB11	J-4
CN1	A-11	IC54	B-19	RB12	D-11
CN2	F-1	IC55	M-12	RB13	F-6
CN3	K-2	IC56	H-7	RB14	D-6
CN4	D-1	IC57	M-18	RB15	G-6
CN5	M-1	IC58	L-14	RB16	G-4
CN6	Q-4	IC59	M-13	RB17	A-3
CN7	A-14	IC60	N-16	RB18	C-2
CN8	Q-11	IC61	P-18	RB19	D-2
		IC62	N-16	RB20	F-5
D2	B-10	IC64	M-18		
D3	B-10	IC65	J-3	S1	A-8
D4	M-19	IC66	L-16	S2	A-9
D5	N-19	IC67	M-16	S3	L-17
D6	N-19	IC68	L-16	S4	D-13
D7	N-19	IC69	F-3	S5	B-4
D8	P-19	IC70	M-3		
D9	M-17	IC71	K-3	TP1	B-11
D10	K-3	IC72	P-8	TP2	D-11
D11	H-4	IC73	M-7	TP3	C-8
D12	H-4	IC74	M-8	TP4	F-12
D13	M-19	IC75	M-9	TP5	F-13
		IC76	M-10	TP7	K-14
E1	E-4	IC77	L-8	TP8	K-14
E2	H-4	IC78	L-9	TP9	L-3
E3	N-4	IC79	J-7	TP10	K-3
E4	C-9	IC80	K-7	TP11	H-6
E5	H-9	IC81	J-9	TP12	H-6
E6	N-10	IC82	J-10		
E7	F-13	IC83	K-10	X1	C-11
E8	M-14	IC84	N-3	X2	C-10
E9	F-16	IC85	M-3	X3	Q-17
E10	K-18	IC86	P-3	X5	D-5
		IC87	P-2		
IC1	C-11	IC88	M-2		
IC2	C-8	IC89	N-5		
IC3	B-8	IC90	M-4		
IC4	B-10	IC91	M-5		
IC5	B-9	IC92	M-6		
IC6	B-11	IC93	M-7		
IC7	D-10	IC94	L-5		
IC8	D-9	IC95	L-6		
IC9	D-7	IC96	J-7		
IC10	D-11	IC97	K-6		
IC11	C-9	IC98	J-7		
IC12	G-13	IC99	J-4		
IC13	F-8	IC100	K-4		
IC14	G-9	IC101	D-13		
IC15	G-10	IC102	E-13		
IC16	E-8	IC103	E-12		
IC17	E-9	IC104	D-12		
IC18	E-10	IC105	E-10		
IC19	H-8	IC106	D-12		
IC20	H-11	IC107	B-7		
IC21	M-11	IC108	D-7		
IC22	N-11	IC109	B-5		
IC23	N-10	IC110	C-5		
IC24	K-11	IC111	D-3		
IC25	L-11	IC112	G-3		

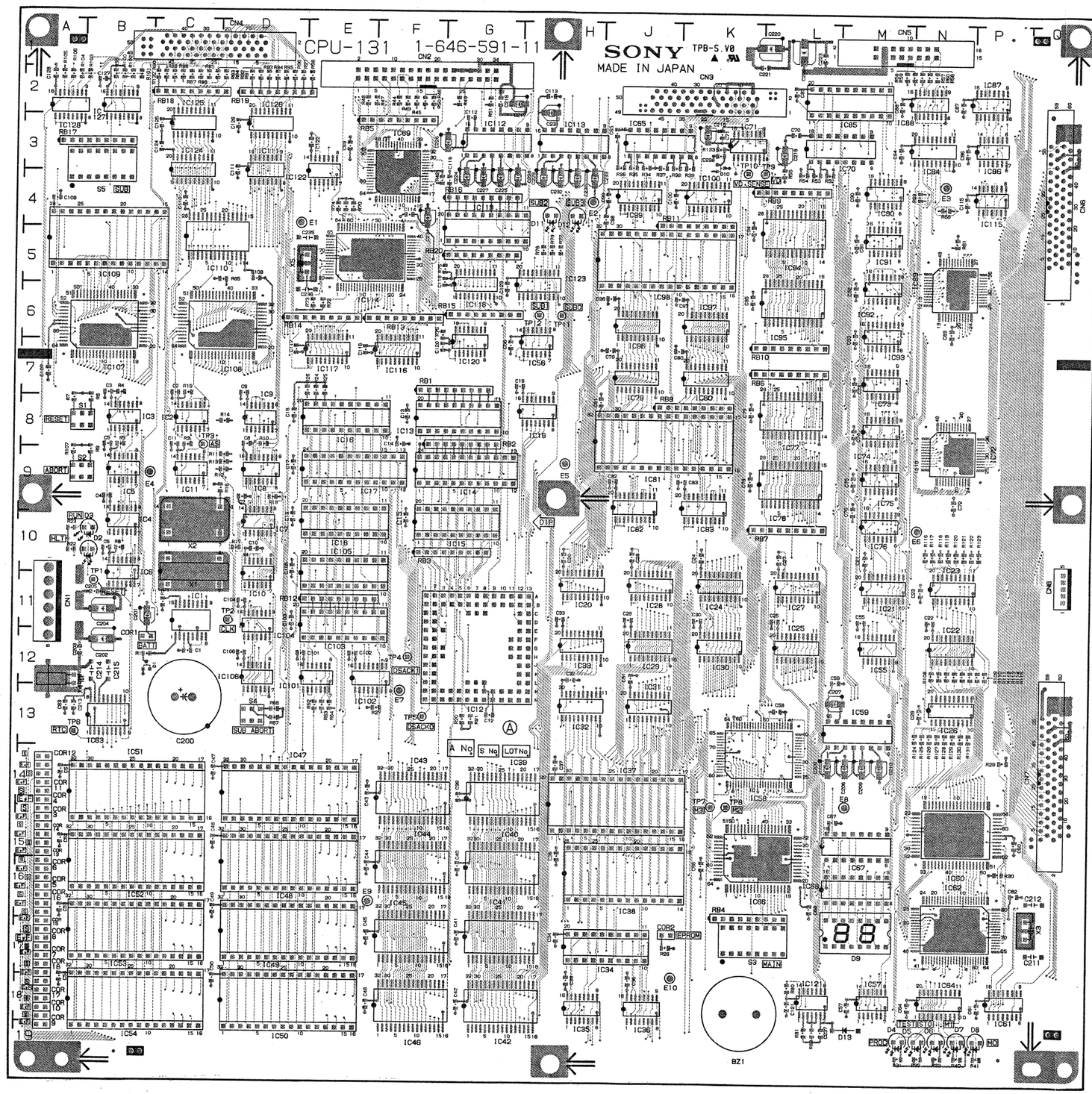

CPU-131 -A SIDE-
1-646-591-11
BKDS-6010

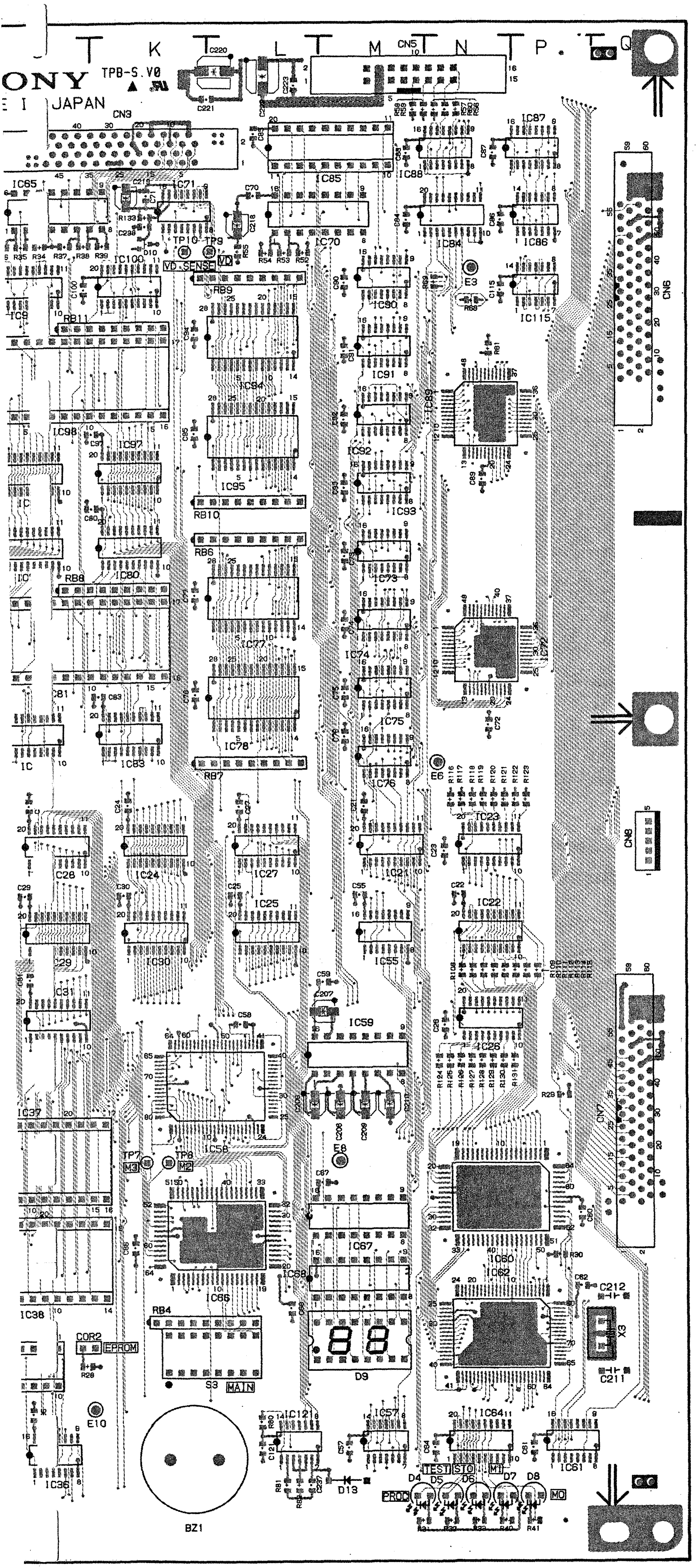

CPU-131 -A SIDE-

1-646-591-11
BKDS-6010

CPU-131;System Control Board

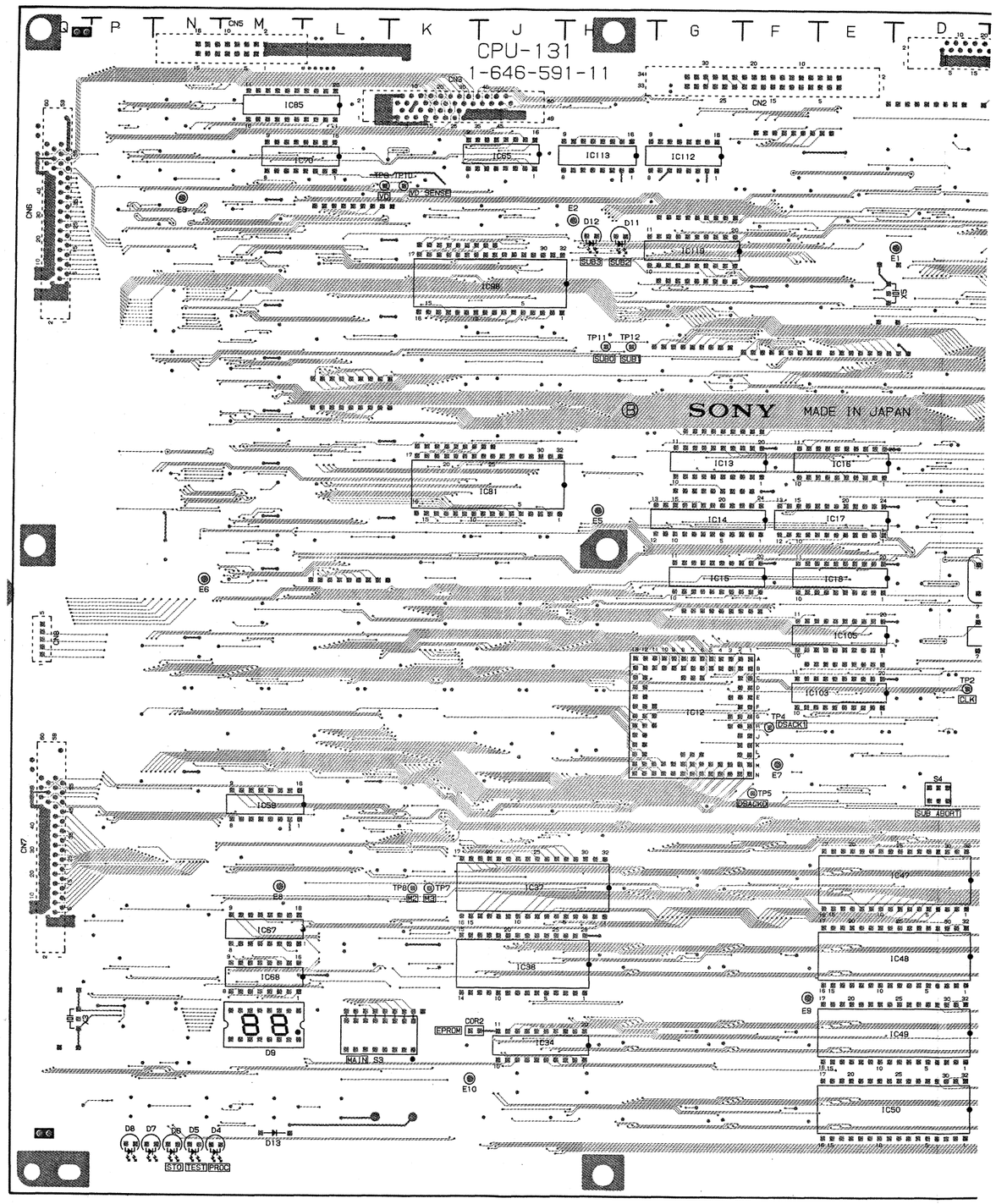

CPU-131;System Control Board

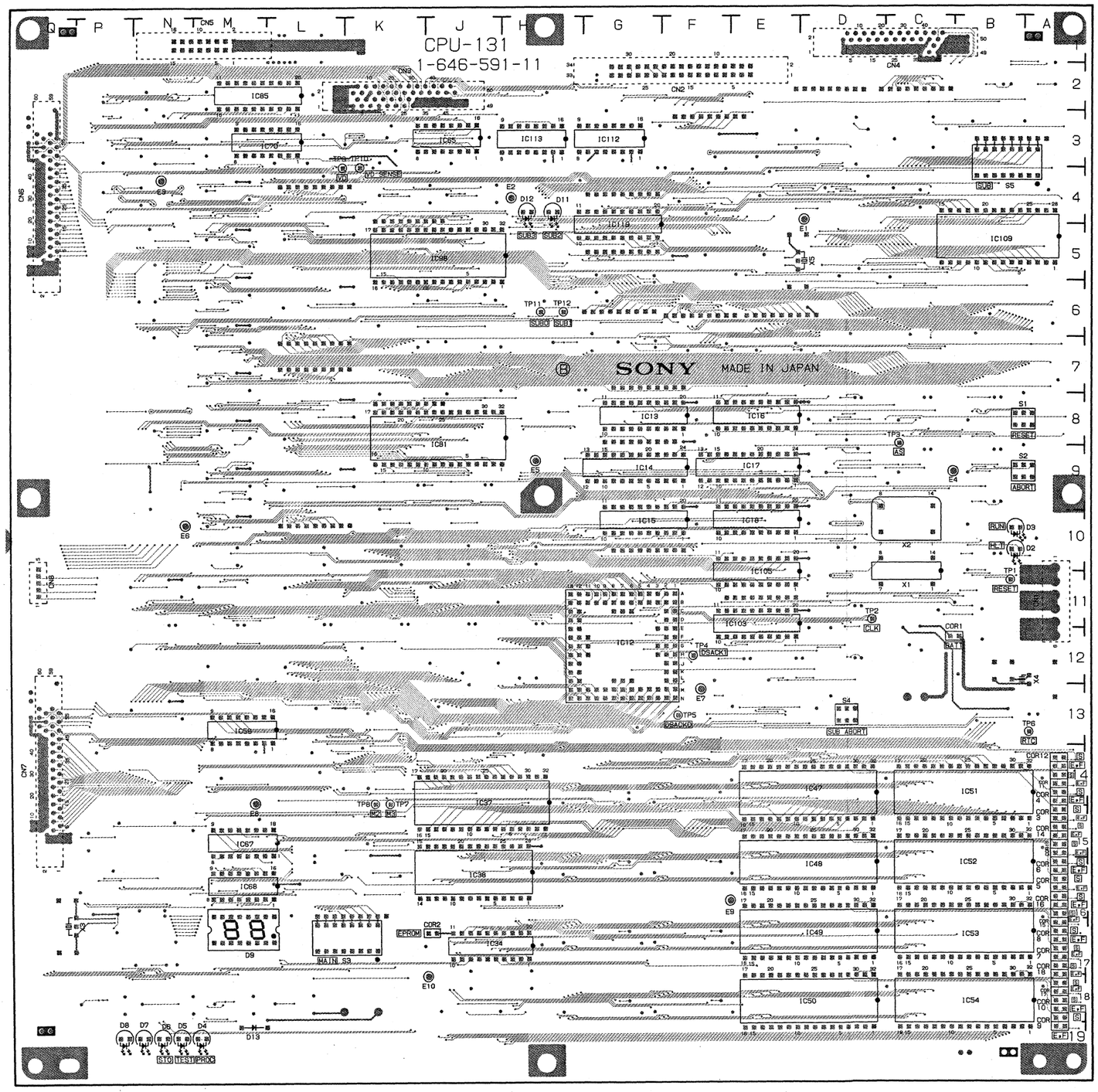

CPU-131 -B SIDE-
1-646-591-11
BKDS-6010

CPU-131(1-646-591-11)

BZ1	K-19	IC26	N-13	IC113	H-3
		IC27	L-11	IC114	E-6
CN112	G-13	IC28	J-11	IC115	P-4
CN113	F-8	IC29	J-12	IC116	F-7
CN114	G-9	IC30	K-12	IC117	E-7
CN115	G-10	IC31	J-13	IC118	G-6
CN116	E-8	IC32	H-13	IC119	G-4
CN117	E-9	IC33	H-12	IC120	G-7
CN118	E-10	IC34	J-17	IC121	L-18
CN134	J-17	IC35	H-19	IC122	D-4
CN137	J-14	IC36	J-19	IC123	H-5
CN138	J-16	IC37	J-14	IC124	C-3
CN147	E-14	IC38	J-16	IC125	C-2
CN148	D-16	IC39	H-14	IC126	D-2
CN149	D-17	IC40	G-15	IC127	B-3
CN150	D-19	IC41	G-16	IC128	A-3
CN151	B-14	IC42	G-19		
CN152	B-16	IC43	F-14	RB1	F-7
CN153	B-17	IC44	F-15	RB2	G-8
CN154	B-19	IC45	F-16	RB3	F-10
CN181	J-9	IC46	F-19	RB4	K-16
CN185	M-3	IC47	E-14	RB5	E-3
CN198	J-7	IC48	D-16	RB6	L-7
CN1103	E-12	IC49	D-17	RB7	L-10
CN1105	E-10	IC50	D-19	RB8	J-8
CN1109	B-5	IC51	B-14	RB9	L-4
CN1119	G-4	IC52	B-16	RB10	L-7
		IC53	B-17	RB11	J-4
CN1	A-11	IC54	B-19	RB12	D-11
CN2	F-1	IC55	M-12	RB13	F-6
CN3	K-2	IC56	H-7	RB14	D-6
CN4	D-1	IC57	M-18	RB15	G-6
CN5	M-1	IC58	L-14	RB16	G-4
CN6	Q-4	IC59	M-13	RB17	A-3
CN7	A-14	IC60	N-16	RB18	C-2
CN8	Q-11	IC61	P-18	RB19	D-2
		IC62	N-16	RB20	F-5
D2	B-10	IC64	M-18		
D3	B-10	IC65	J-3	S1	A-8
D4	M-19	IC66	L-16	S2	A-9
D5	N-19	IC67	M-16	S3	L-17
D6	N-19	IC68	L-16	S4	D-13
D7	N-19	IC69	F-3	S5	B-4
D8	P-19	IC70	M-3		
D9	M-17	IC71	K-3	TP1	B-11
D10	K-3	IC72	P-8	TP2	D-11
D11	H-4	IC73	M-7	TP3	C-8
D12	H-4	IC74	M-8	TP4	F-12
D13	M-19	IC75	M-9	TP5	F-13
		IC76	M-10	TP7	K-14
E1	E-4	IC77	L-8	TP8	K-14
E2	H-4	IC78	L-9	TP9	L-3
E3	N-4	IC79	J-7	TP10	K-3
E4	C-9	IC80	K-7	TP11	H-6
E5	H-9	IC81	J-9	TP12	H-6
E6	N-10	IC82	J-10		
E7	F-13	IC83	K-10	X1	C-11
E8	M-14	IC84	N-3	X2	C-10
E9	F-16	IC85	M-3	X3	Q-17
E10	K-18	IC86	P-3	X5	D-5
		IC87	P-2		
IC1	C-11	IC88	M-2		
IC2	C-8	IC89	N-5		
IC3	B-8	IC90	M-4		
IC4	B-10	IC91	M-5		
IC5	B-9	IC92	M-6		
IC6	B-11	IC93	M-7		
IC7	D-10	IC94	L-5		
IC8	D-9	IC95	L-6		
IC9	D-7	IC96	J-7		
IC10	D-11	IC97	K-6		
IC11	C-9	IC98	J-7		
IC12	G-13	IC99	J-4		
IC13	F-8	IC100	K-4		
IC14	G-9	IC101	D-13		
IC15	G-10	IC102	E-13		
IC16	E-8	IC103	E-12		
IC17	E-9	IC104	D-12		
IC18	E-10	IC105	E-10		
IC19	H-8	IC106	D-12		
IC20	H-11	IC107	B-7		
IC21	M-11	IC108	D-7		
IC22	N-11	IC109	B-5		
IC23	N-10	IC110	C-5		
IC24	K-11	IC111	D-3		
IC25	L-11	IC112	G-3		

(For KY-239)

IF-403;Switch Interface Board

IF-403(1-646-588-11)

CN1	G-1
CN2	*F-4
CN3	M-5
CN4	A-2
CN5	B-2
E1	B-2
E2	L-6
IC1	H-2
IC2	F-2
IC3	G-3
IC4	G-2
IC6	H-3
IC12	H-4
IC13	C-2
IC14	C-3
IC16	K-4
IC17	K-6
IC18	L-2
IC19	L-3
IC20	K-3
IC21	H-5
IC22	J-4
IC23	J-5
IC25	K-4
IC26	L-4
IC27	L-5
IC28	B-5
IC29	G-5
IC30	E-5
IC31	C-5
IC32	C-6
IC33	D-5
IC34	G-4
IC35	C-4
IC36	E-3
IC37	E-4
IC38	D-3
IC39	D-3
RB1	H-1
RB2	H-2
RB3	E-2
RB4	G-3
RB5	K-6
RB6	J-3
RB7	E-6
RB8	C-6
RB9	H-3
TP1	B-4
TP2	C-2

*;B SIDE

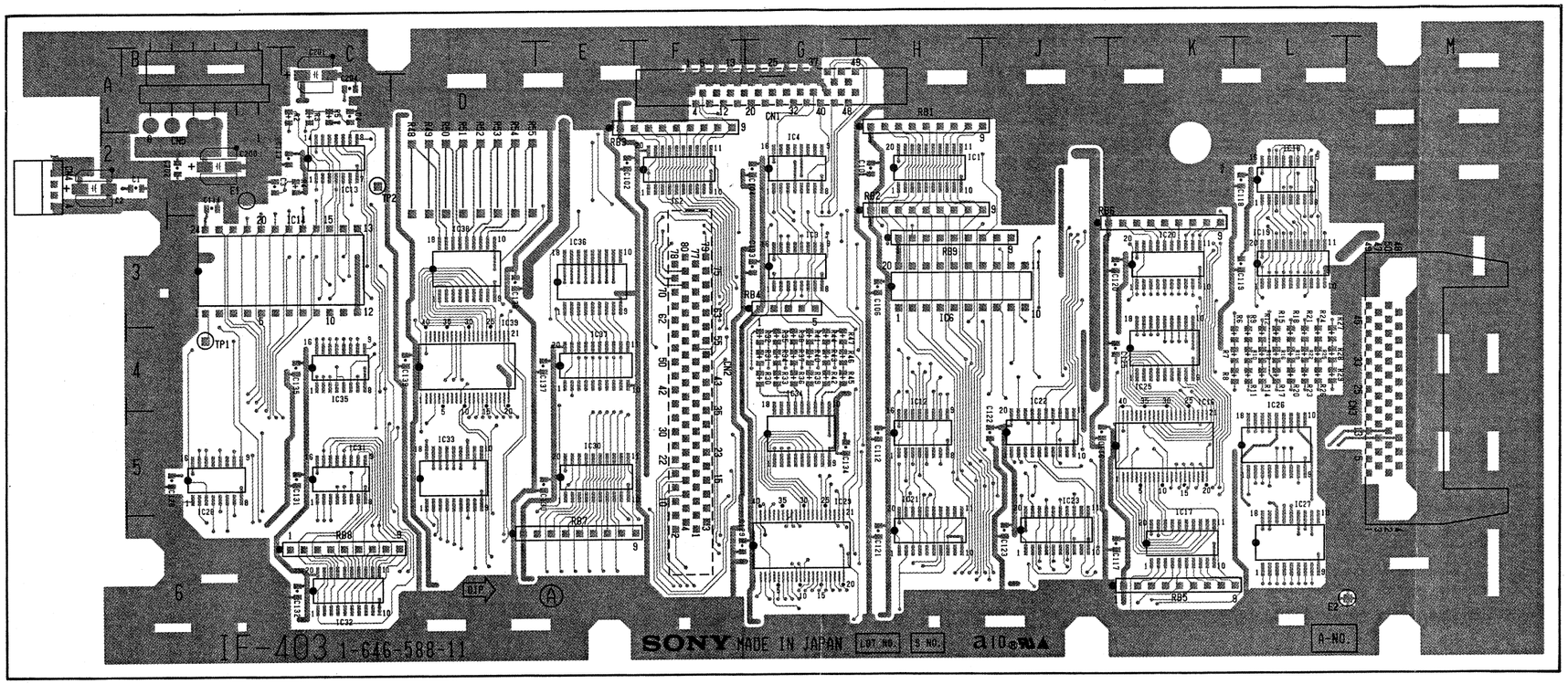

IF-403 -A SIDE-

1-646-588-11

BKDS-6010

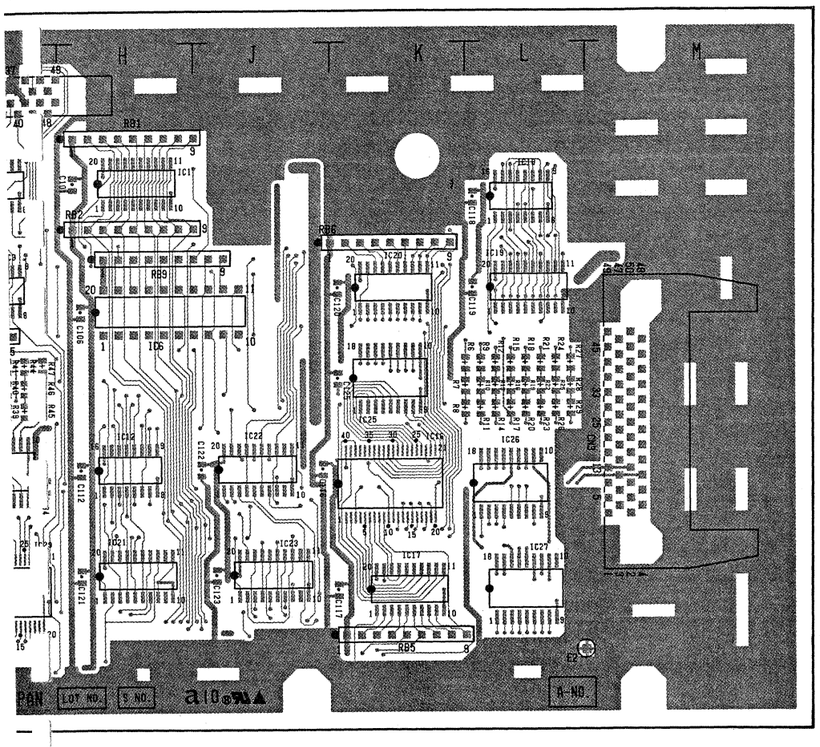

IF-403 -A SIDE-

1-646-588-11

BKDS-6010

(FOR KY-239)
IF-403;Switch Interface Board

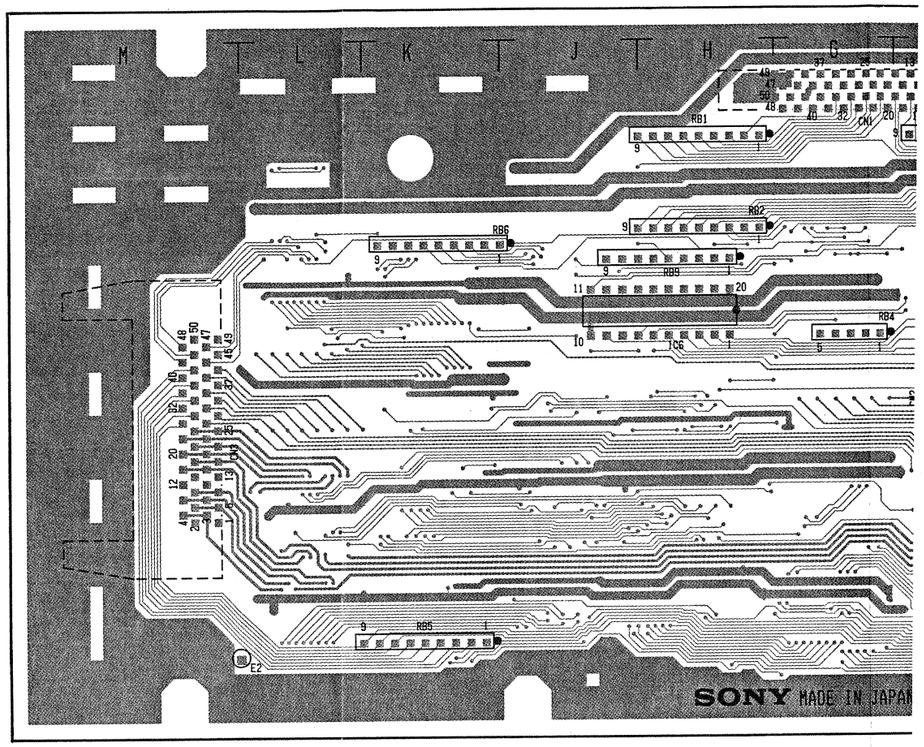

(FOR KY-239)

IF-403;Switch Interface Board

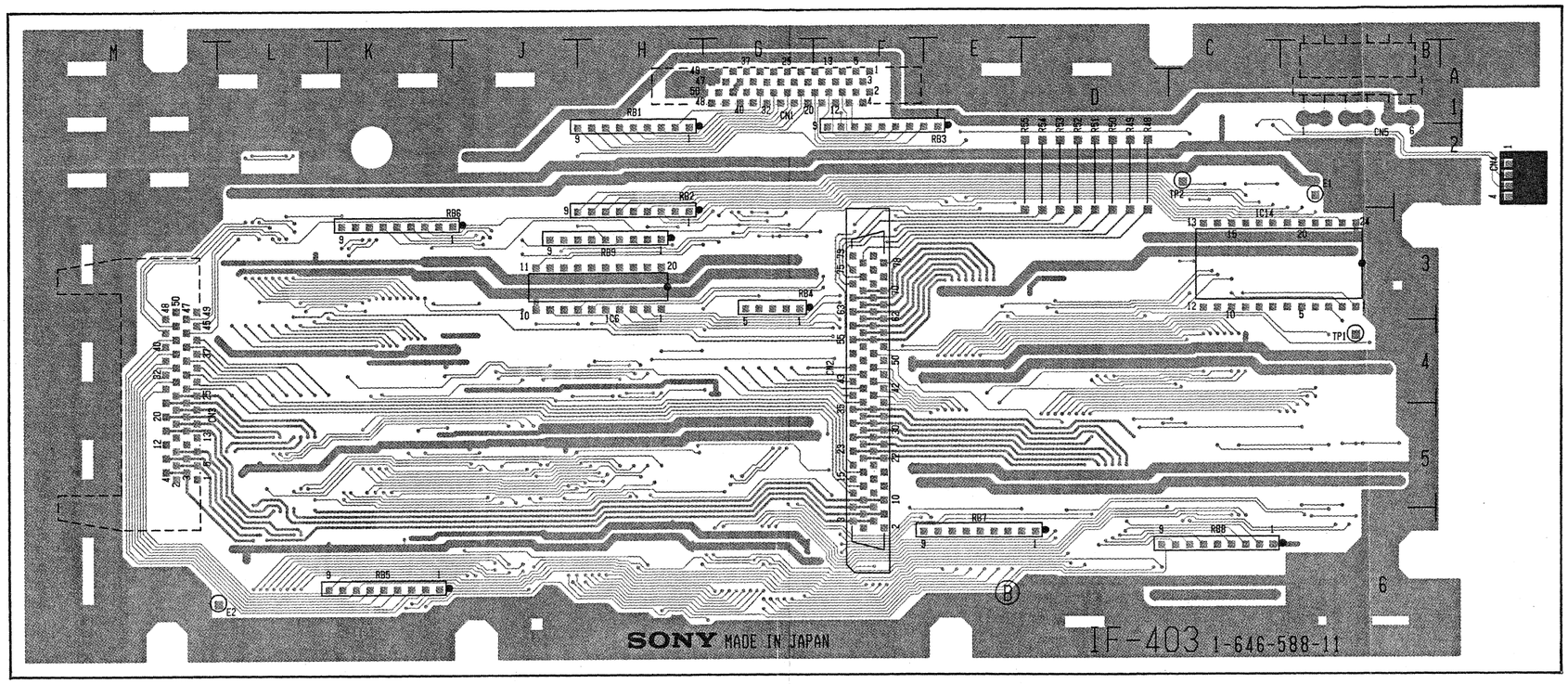

IF-403(1-646-588-11)

CN1	G-1
CN2	*F-4
CN3	M-5
CN4	A-2
CN5	B-2
E1	B-2
E2	L-6
IC1	H-2
IC2	F-2
IC3	G-3
IC4	G-2
IC6	H-3
IC12	H-4
IC13	C-2
IC14	C-3
IC16	K-4
IC17	K-6
IC18	L-2
IC19	L-3
IC20	K-3
IC21	H-5
IC22	J-4
IC23	J-5
IC25	K-4
IC26	L-4
IC27	L-5
IC28	B-5
IC29	G-5
IC30	E-5
IC31	C-5
IC32	C-6
IC33	D-5
IC34	G-4
IC35	C-4
IC36	E-3
IC37	E-4
IC38	D-3
IC39	D-3
RB1	H-1
RB2	H-2
RB3	E-2
RB4	G-3
RB5	K-6
RB6	J-3
RB7	E-6
RB8	C-6
RB9	H-3
TP1	B-4
TP2	C-2

*;B SIDE

IF-403 -B SIDE-

1-646-588-11
BKDS-6010

IF-404(1-646-589-11)

CN1	C-7	IC50	B-9
CN2	M-1	IC51	B-9
CN3	E-6	IC52	F-10
CN6	J-3	IC53	F-8
CN7	M-9	IC54	F-9
CN8	*L-6	IC55	G-9
CN9	*H-9	IC56	G-9
		IC57	E-7
D1	A-10		
D2	A-11	RB1	L-8
		RB2	L-7
E1	L-3	RB3	L-11
E2	F-9	RB4	L-9
		RB5	D-7
IC1	L-8	RB6	L-6
IC2	L-11	RB7	M-2
IC3	L-10	RB8	G-11
IC4	L-9	RB9	B-11
IC5	C-11	RB10	K-10
IC6	K-11		
IC7	K-9		
IC8	K-10	*;B SIDE	
IC13	D-11		
IC14	D-8		
IC15	E-8		
IC16	E-9		
IC17	E-10		
IC18	F-6		
IC19	C-10		
IC20	J-9		
IC21	K-8		
IC22	L-6		
IC24	M-3		
IC25	M-4		
IC26	L-4		
IC27	K-6		
IC28	M-5		
IC29	M-6		
IC30	M-2		
IC31	L-4		
IC32	K-1		
IC33	J-2		
IC34	K-2		
IC35	K-3		
IC36	L-2		
IC37	G-11		
IC38	J-1		
IC39	F-11		
IC45	B-11		
IC46	A-8		
IC47	A-9		
IC48	C-8		
IC49	C-9		

(For KY-243)
IF-404;Switch Interface Board

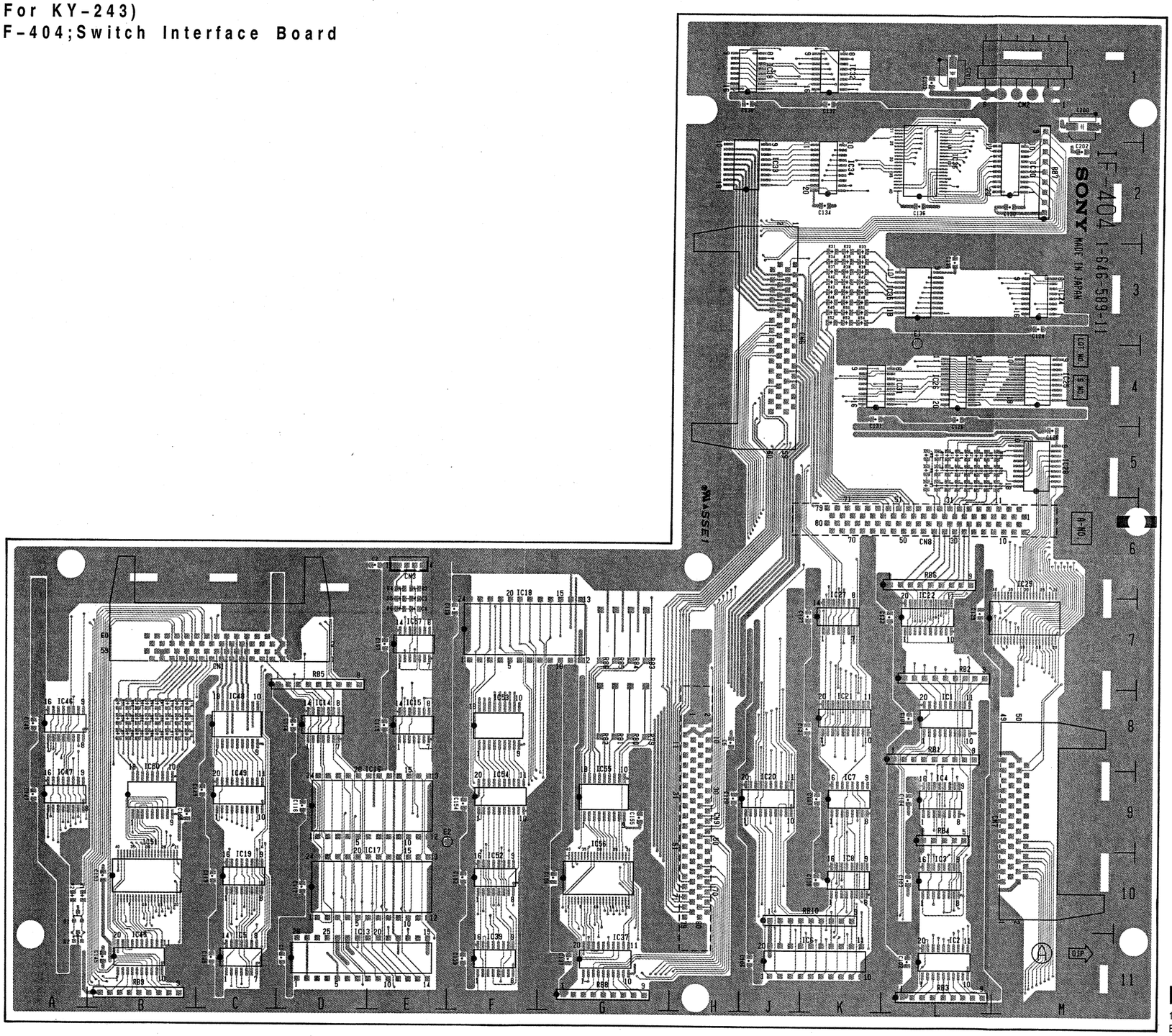

IF-404 -A SIDE-
1-646-589-11
BKDS-6010

IF-404;Switch Interface Board (For KY-243)

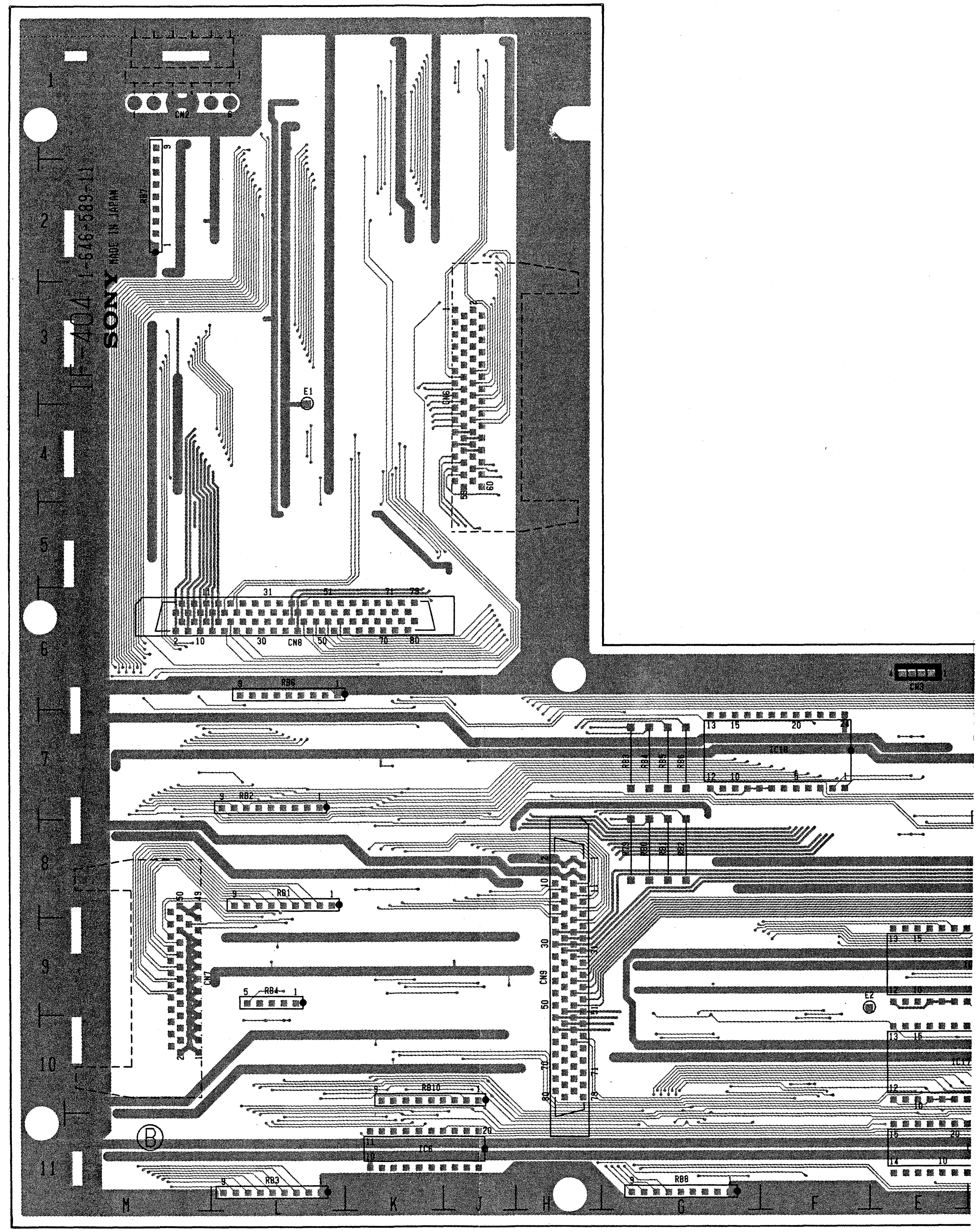

IF-404;Switch Interface Board (For KY-243)

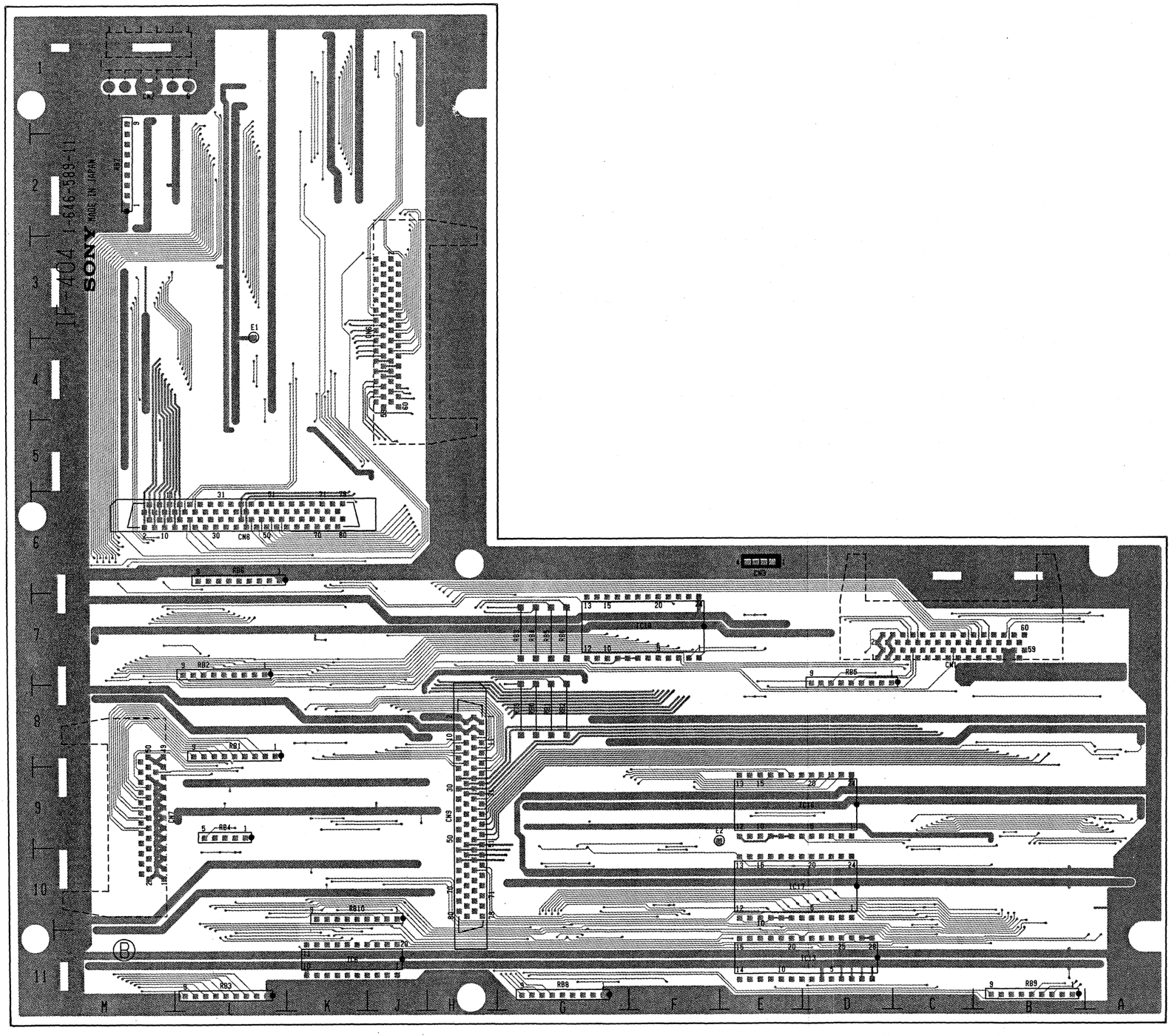

IF-404(1-646-589-11)

CN1	C-7	IC50	B-9
CN2	M-1	IC51	B-9
CN3	E-6	IC52	F-10
CN6	J-3	IC53	F-8
CN7	M-9	IC54	F-9
CN8	*L-6	IC55	G-9
CN9	*H-9	IC56	G-9
		IC57	E-7
D1	A-10		
D2	A-11	RB1	L-8
		RB2	L-7
E1	L-3	RB3	L-11
E2	F-9	RB4	L-9
		RB5	D-7
IC1	L-8	RB6	L-6
IC2	L-11	RB7	M-2
IC3	L-10	RB8	G-11
IC4	L-9	RB9	B-11
IC5	C-11	RB10	K-10
IC6	K-11		
IC7	K-9		
IC8	K-10	*;B SIDE	
IC13	D-11		
IC14	D-8		
IC15	E-8		
IC16	E-9		
IC17	E-10		
IC18	F-6		
IC19	C-10		
IC20	J-9		
IC21	K-8		
IC22	L-6		
IC24	M-3		
IC25	M-4		
IC26	L-4		
IC27	K-6		
IC28	M-5		
IC29	M-6		
IC30	M-2		
IC31	L-4		
IC32	K-1		
IC33	J-2		
IC34	K-2		
IC35	K-3		
IC36	L-2		
IC37	G-11		
IC38	J-1		
IC39	F-11		
IC45	B-11		
IC46	A-8		
IC47	A-9		
IC48	C-8		
IC49	C-9		

IF-404 -B SIDE-
1-646-589-11
BKDS-6010

IF-418;Interface Board

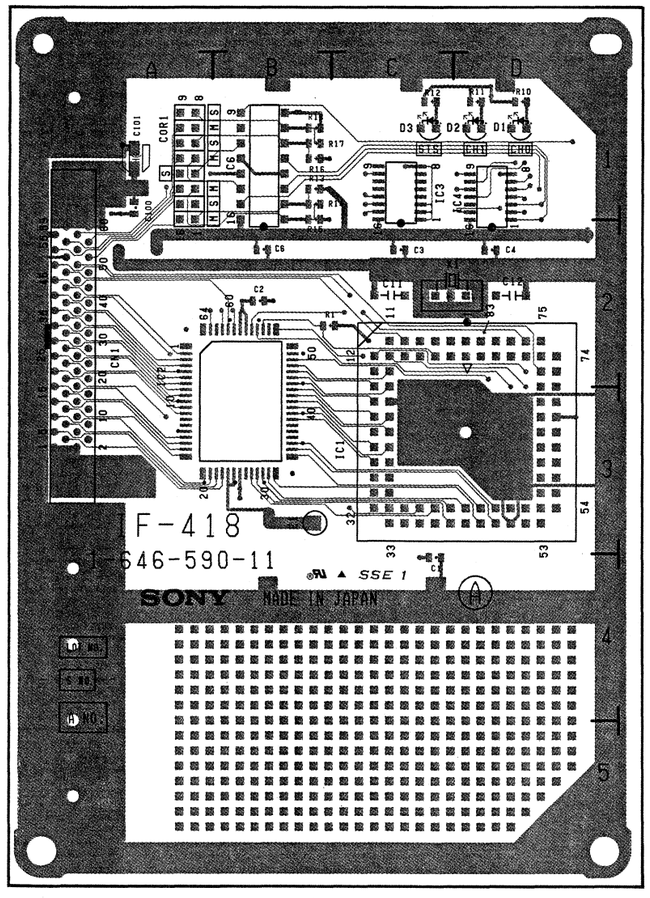

IF-418-A SIDE-
1-646-590-11
BKDS-6010

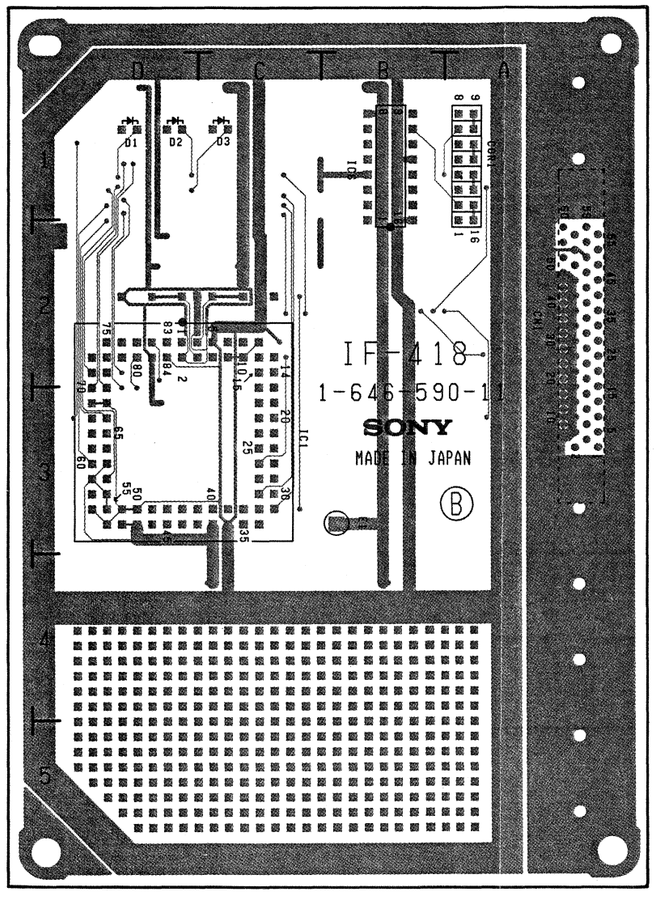

IF-418-B SIDE-
1-646-590-11
BKDS-6010

KY-238;Switch Board

KY-238(1-646-579-11)

CN1	*G-1
D1	*A-3
D3	*C-3
D5	*D-3
D7	*E-3
D11	*G-3
D13	*H-3
D15	*J-3
D17	*K-3
D31	*A-2
D33	*C-2
D35	*D-2
D37	*E-2
D41	*G-2
D43	*H-2
D45	*J-2
D47	*K-2
D61	*A-1
D63	*B-1
D65	*D-1
D67	*E-1
D71	*G-1
D73	*H-1
D75	*J-1
D77	*K-1
S1	A-3
S2	A-3
S3	B-3
S4	C-3
S5	C-3
S6	D-3
S7	E-3
S8	E-33
S11	F-3
S12	G-3
S13	G-3
S14	H-3
S15	J-3
S16	J-3
S17	K-3
S31	A-2
S32	B-2
S33	B-2
S34	C-2
S35	C-2
S36	D-2
S37	E-2
S38	F-2
S41	F-2
S42	G-2
S43	G-2
S44	H-2
S45	J-2
S46	J-2
S47	K-2
S61	A-1
S62	B-1
S63	B-1
S64	C-1
S65	C-1
S66	D-1
S67	E-1
S68	F-1
S71	F-1
S72	G-1
S73	G-1
S74	H-1
S75	J-1
S76	J-1
S77	K-1

*;B SIDE

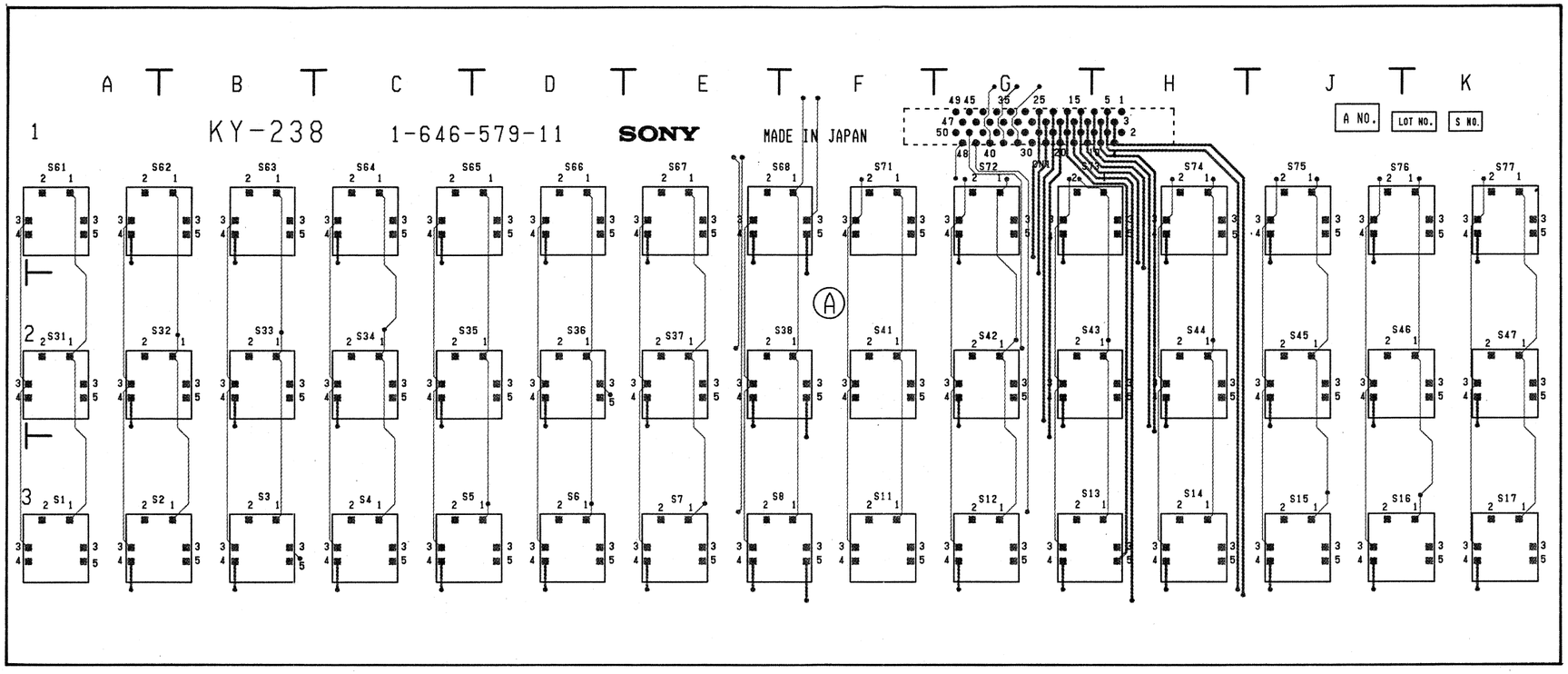

KY-238-A SIDE-
1-646-579-11
BKDS-6010

7-10

KY-238;Switch Board

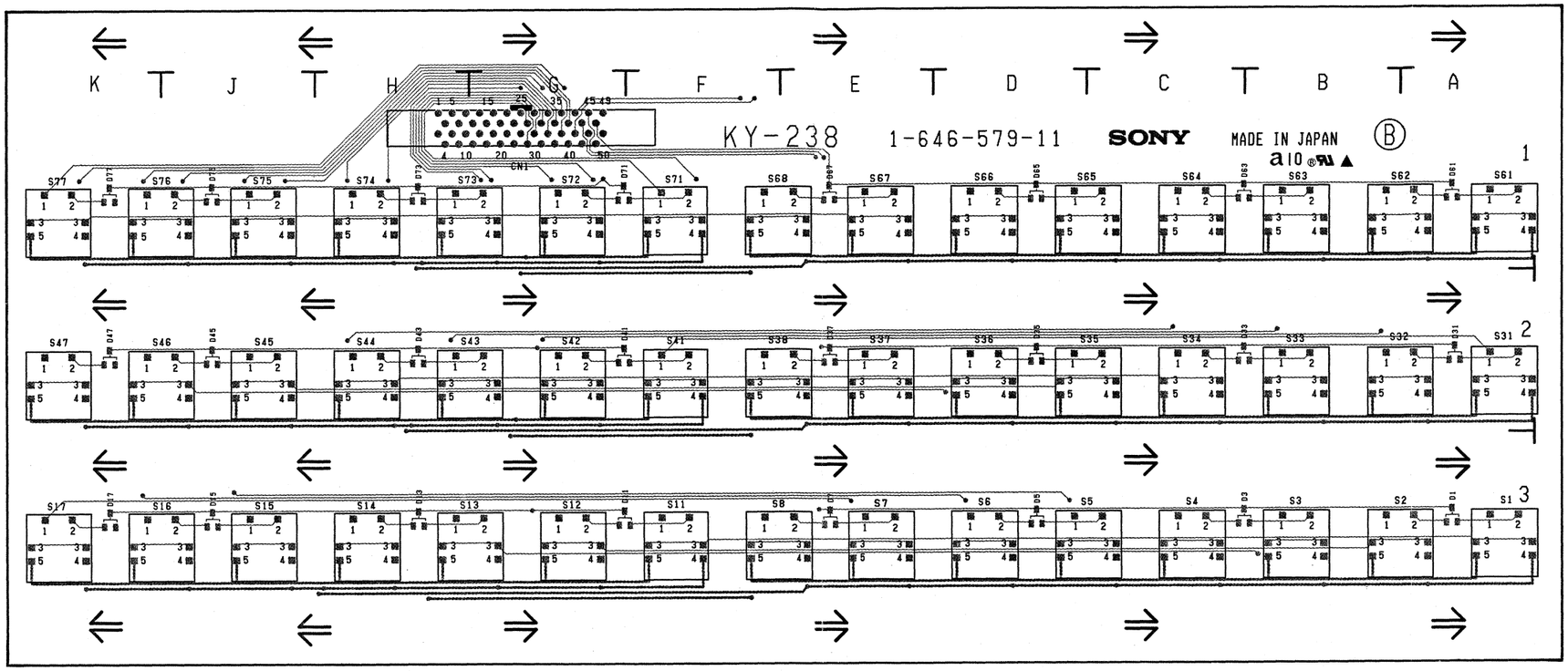

KY-238-B SIDE-
1-646-579-11
BKDS-6010

KY-238(1-646-579-11)

CN1	*G-1
D1	*A-3
D3	*C-3
D5	*D-3
D7	*E-3
D11	*G-3
D13	*H-3
D15	*J-3
D17	*K-3
D31	*A-2
D33	*C-2
D35	*D-2
D37	*E-2
D41	*G-2
D43	*H-2
D45	*J-2
D47	*K-2
D61	*A-1
D63	*B-1
D65	*D-1
D67	*E-1
D71	*G-1
D73	*H-1
D75	*J-1
D77	*K-1
S1	A-3
S2	A-3
S3	B-3
S4	C-3
S5	C-3
S6	D-3
S7	E-3
S8	E-33
S11	F-3
S12	G-3
S13	G-3
S14	H-3
S15	J-3
S16	J-3
S17	K-3
S31	A-2
S32	B-2
S33	B-2
S34	C-2
S35	C-2
S36	D-2
S37	E-2
S38	F-2
S41	F-2
S42	G-2
S43	G-2
S44	H-2
S45	J-2
S46	J-2
S47	K-2
S61	A-1
S62	B-1
S63	B-1
S64	C-1
S65	C-1
S66	D-1
S67	E-1
S68	F-1
S71	F-1
S72	G-1
S73	G-1
S74	H-1
S75	J-1
S76	J-1
S77	K-1

*;B SIDE

7-11

KY-239;Switch Board

KY-239(1-646-580-11)

CN1	*F-3
CN7	H-4
CN8	H-4
CN9	K-3
D21	*A-4
D23	*D-4
D25	*E-4
D51	*A-3
D53	*D-3
D55	*E-3
D81	*A-2
D83	*D-2
D85	*E-2
D91	*C-1
D93	*E-1
D95	*F-2
D101	*F-4
D103	*H-1
D105	*J-1
D111	*J-2
D113	*J-3
D115	*H-5
D201	H-1
D202	H-1
D203	H-1
D204	J-1
D205	J-1
D206	J-1
D207	G-3
D208	G-3
D209	G-3
D210	G-3
D211	G-3
D212	G-3
S21	A-4
S22	B-4
S23	C-4
S25	E-4
S51	A-3
S52	B-3
S53	C-3
S55	E-3
S81	A-2
S82	B-2
S83	C-2
S85	E-2
S91	B-1
S92	C-1
S93	D-1
S94	E-1
S95	F-2
S96	F-3
S101	F-5
S102	F-1
S103	G-2
S104	H-2
S105	J-2
S106	G-3
S111	H-3
S112	J-3
S113	H-3
S114	J-3
S115	H-4
S116	J-4

*;B SIDE

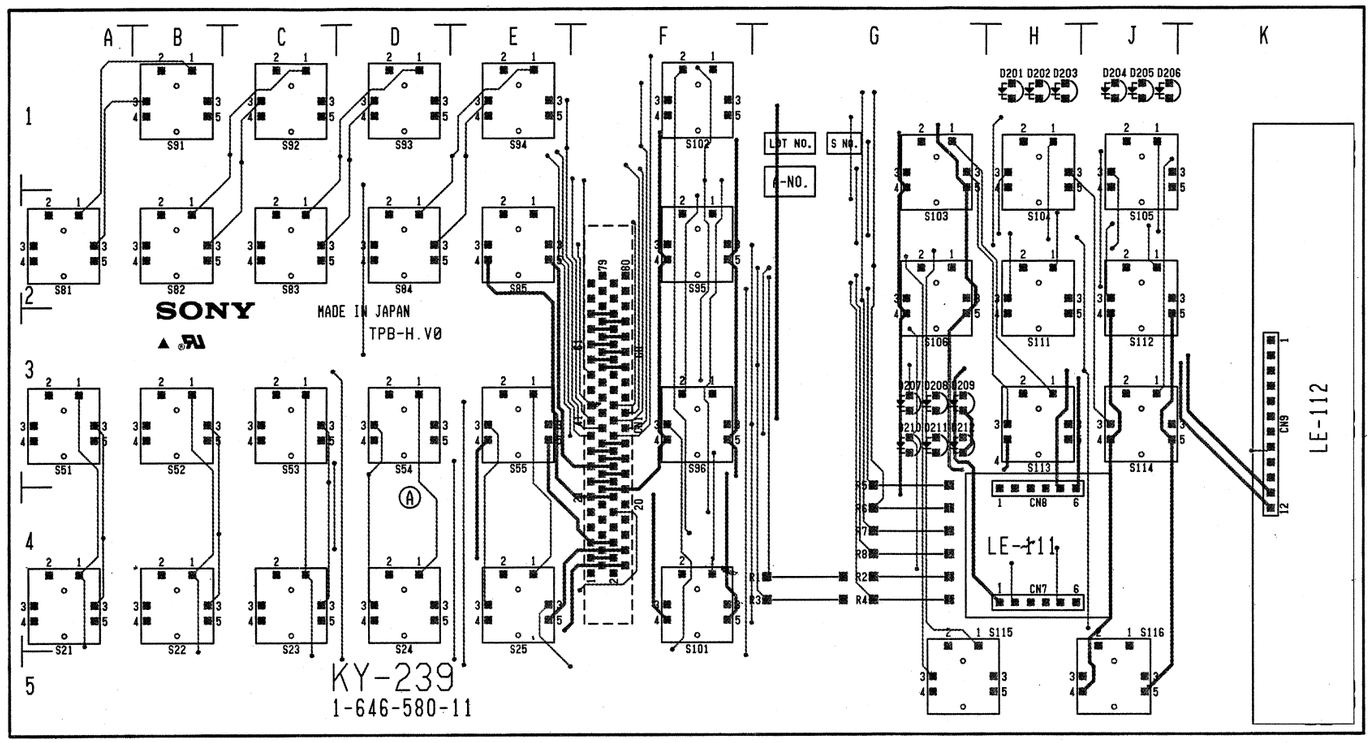

KY-239 -A SIDE-
1-646-580-11
BKDS-6010

7-12

KY-239;Switch Board

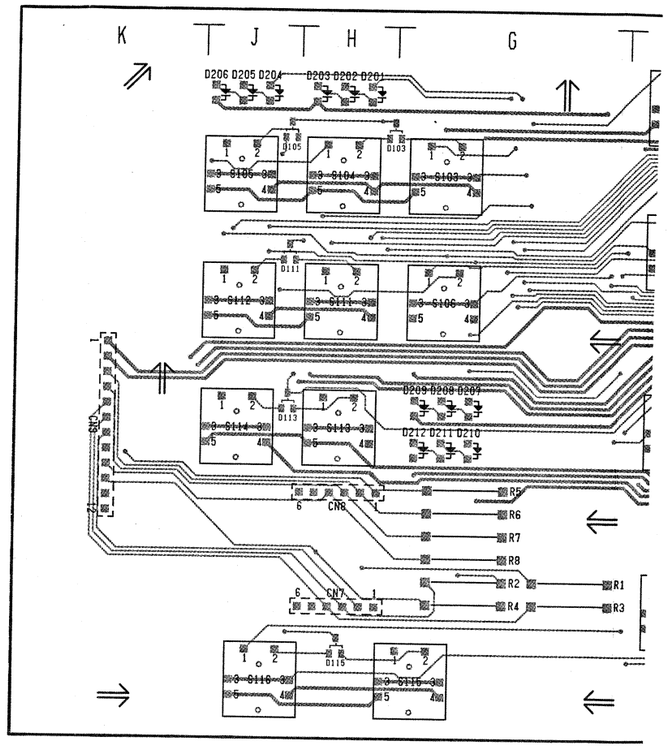

KY-239;Switch Board

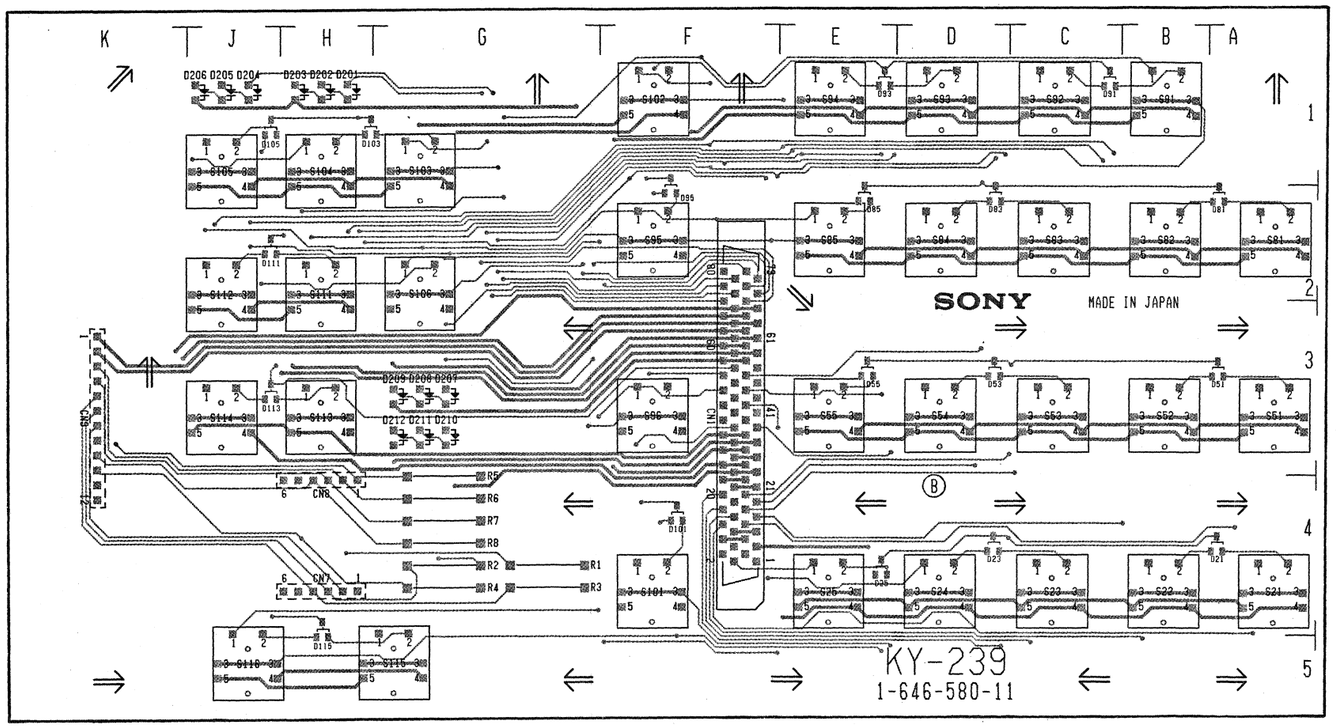

KY-239 -B SIDE-
1-646-580-11
BKDS-6010

KY-239(1-646-580-11)

CN1	*F-3
CN7	H-4
CN8	H-4
CN9	K-3
D21	*A-4
D23	*D-4
D25	*E-4
D51	*A-3
D53	*D-3
D55	*E-3
D81	*A-2
D83	*D-2
D85	*E-2
D91	*C-1
D93	*E-1
D95	*F-2
D101	*F-4
D103	*H-1
D105	*J-1
D111	*J-2
D113	*J-3
D115	*H-5
D201	H-1
D202	H-1
D203	H-1
D204	J-1
D205	J-1
D206	J-1
D207	G-3
D208	G-3
D209	G-3
D210	G-3
D211	G-3
D212	G-3
S21	A-4
S22	B-4
S23	C-4
S24	D-4
S51	A-3
S52	B-3
S53	C-3
S54	D-3
S81	A-2
S82	B-2
S83	C-2
S84	D-2
S91	B-1
S92	C-1
S93	D-1
S94	E-1
S95	F-2
S96	F-3
S101	F-5
S102	F-1
S103	G-2
S104	H-2
S105	J-2
S106	G-3
S111	H-3
S112	J-3
S113	H-3
S114	J-3
S115	H-4
S116	J-4

*;B SIDE

KY-240;Switch Board

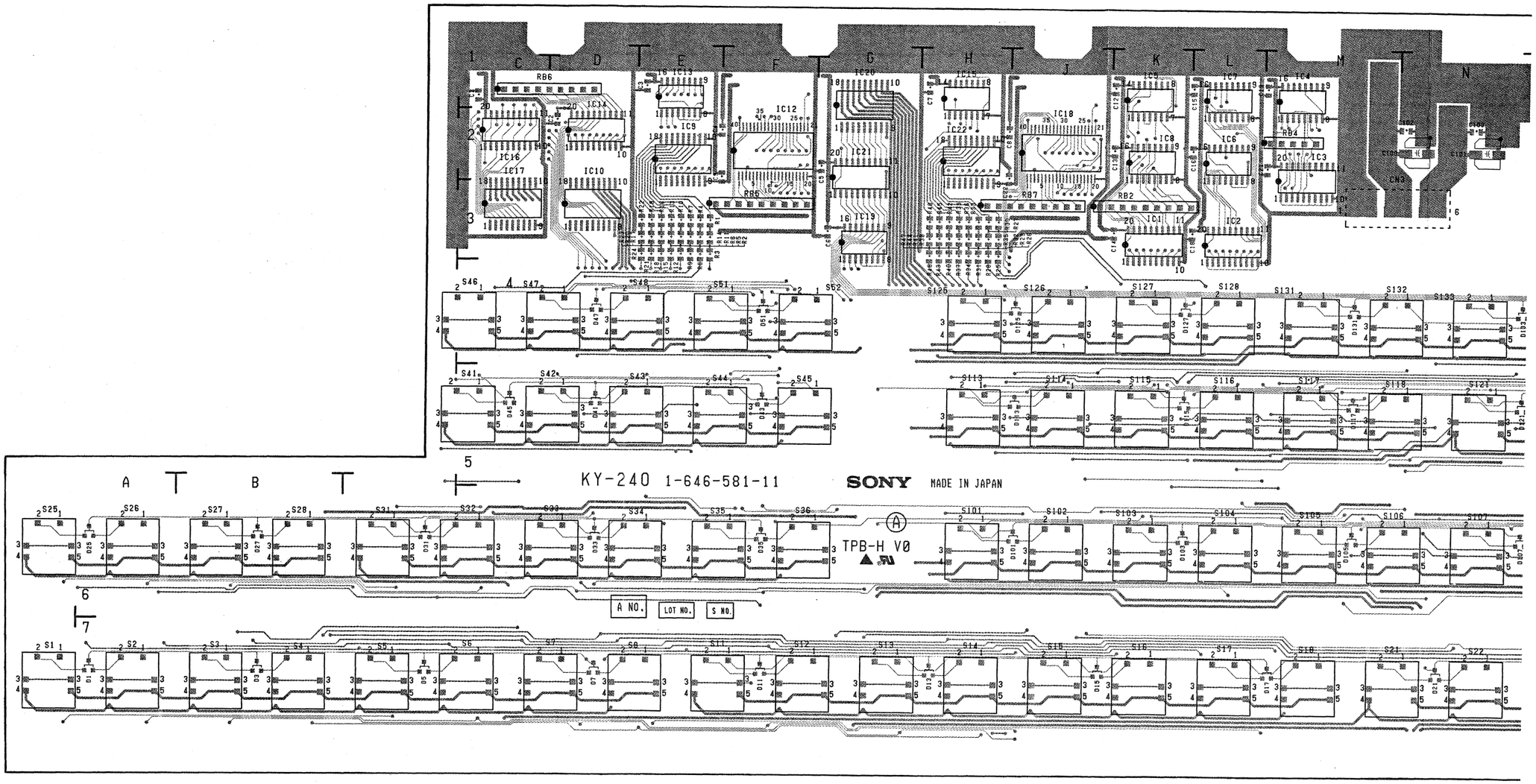

KY-240(1-646-581-11)

CN3	*N-2	S1	A-7
CN4	*P-1	S2	A-7
CN5	*Q-7	S3	B-7
CN6	*Q-6	S4	B-7
		S5	C-7
D1	A-7	S6	C-7
D3	B-7	S7	D-7
D5	C-7	S8	D-7
D7	D-7	S11	E-7
D11	F-7	S12	F-7
D13	H-7	S13	G-7
D15	J-7	S14	H-7
D17	M-7	S15	J-7
D21	N-7	S16	K-7
D23	P-7	S17	L-7
D25	A-6	S18	M-7
D27	B-6	S21	M-7
D31	C-6	S22	N-7
D33	D-6	S23	P-7
D35	F-6	S24	P-7
D41	D-5	S25	A-6
D43	F-5	S26	A-6
D45	C-5	S27	B-6
D47	D-4	S28	B-6
D51	F-4	S31	C-6
D53	Q-7	S32	C-6
D101	J-6	S33	D-6
D103	K-6	S34	E-6
D105	M-6	S35	E-6
D107	N-6	S36	F-6
D111	Q-6	S41	C-5
D113	J-5	S42	D-5
D115	K-5	S43	E-5
D117	M-5	S44	F-5
D121	N-5	S45	F-5
D123	Q-5	S46	C-4
D125	J-4	S47	C-4
D127	K-4	S48	E-4
D131	M-4	S51	E-4
D133	N-4	S52	G-4
D135	Q-4	S53	Q-7
D137	P-3	S101	H-6
		S102	J-6
IC1	K-3	S103	K-6
IC2	L-3	S104	L-6
IC3	M-2	S105	M-6
IC4	M-1	S106	M-6
IC5	K-1	S107	N-6
IC6	L-2	S108	P-6
IC7	L-1	S111	P-6
IC8	K-2	S112	Q-6
IC9	E-2	S113	H-5
IC10	D-2	S114	J-5
		S115	K-5
IC12	F-1	S116	L-5
IC13	E-1	S117	M-5
IC14	D-1	S118	N-5
IC15	H-1	S121	N-5
IC16	C-2	S122	P-5
IC17	C-2	S123	P-5
IC18	J-2	S124	Q-5
IC19	G-3	S125	H-4
IC20	G-1	S126	J-4
IC21	G-2	S127	K-4
IC22	H-2	S128	L-4
		S131	M-4
RB1	P-2	S132	M-4
RB2	K-3	S133	N-4
RB3	Q-2	S134	P-4
RB4	M-2	S135	P-4
RB5	F-3	S136	Q-4
RB6	C-1	S137	P-2
RB7	J-3	S138	Q-2

*;B SIDE

Board

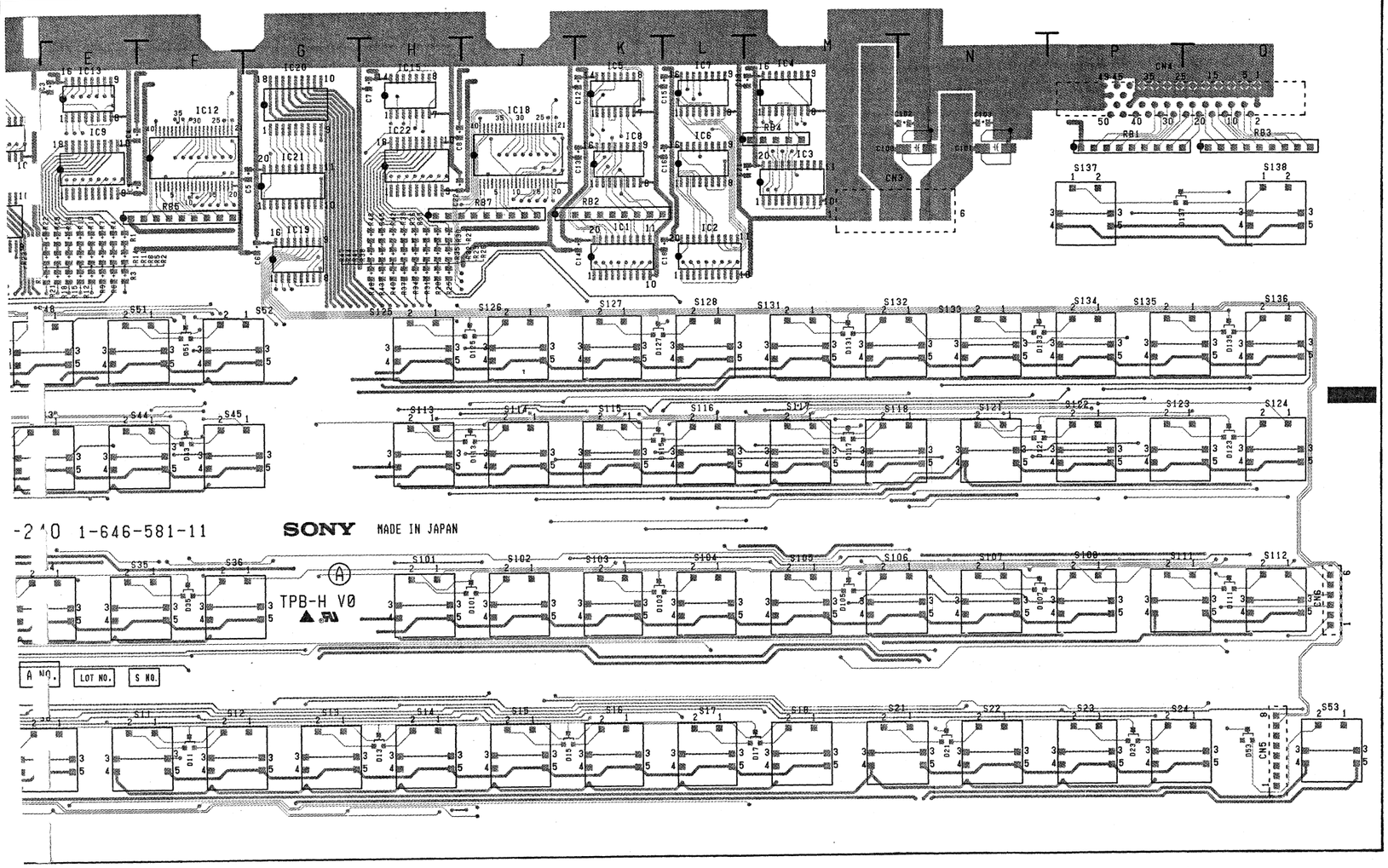

KY-240 -A SIDE-
1-646-581-11
BKDS-6010

KY-240;Switch Board

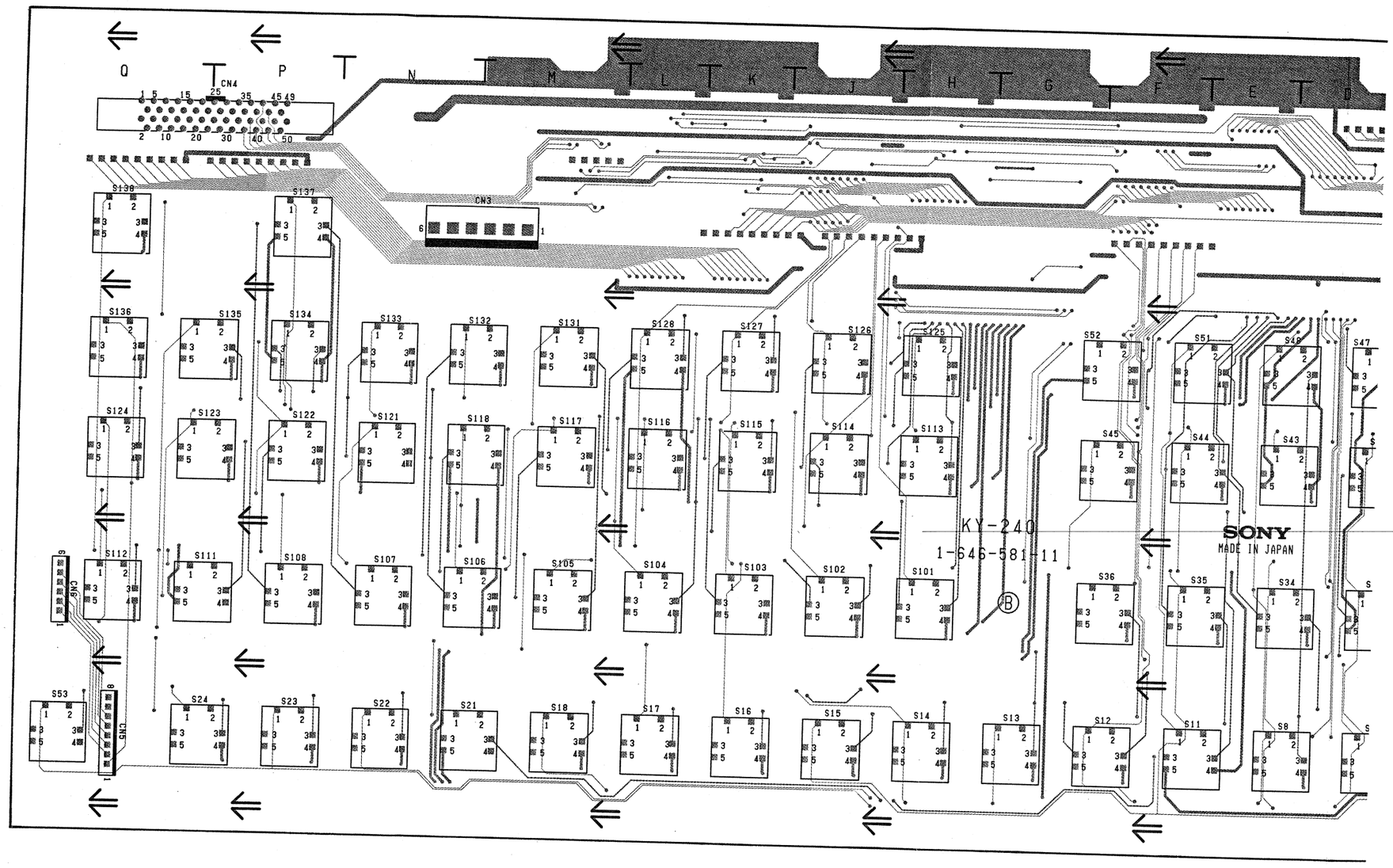

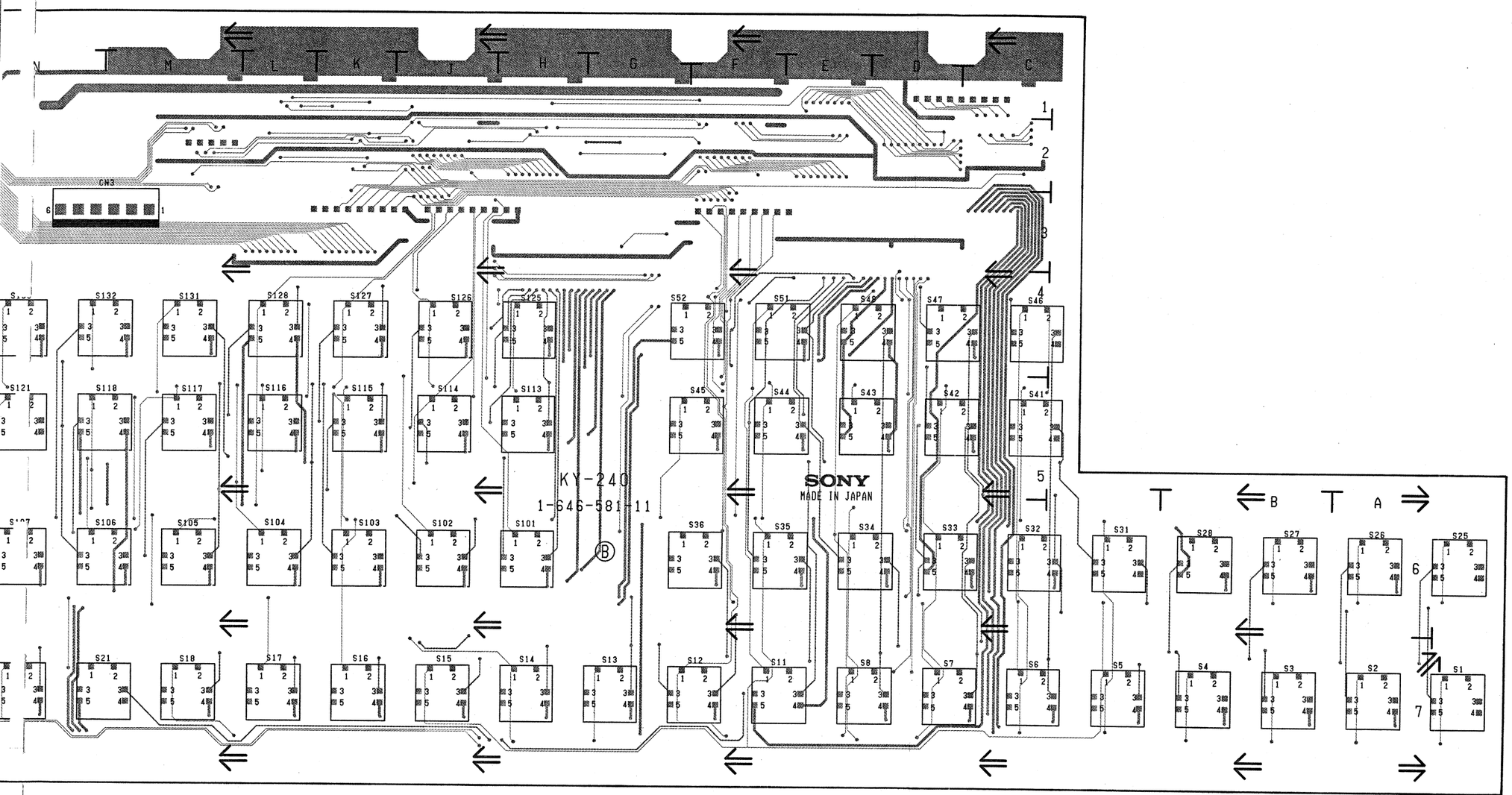

KY-240 -B SIDE-

1-646-581-11

BKDS-6010

KY-240(1-646-581-11)

CN3	*N-2	S1	A-7
CN4	*P-1	S2	A-7
CN5	*Q-7	S3	B-7
CN6	*Q-6	S4	B-7
		S5	C-7
D1	A-7	S6	C-7
D3	B-7	S7	D-7
D5	C-7	S8	D-7
D7	D-7	S11	E-7
D11	F-7	S12	F-7
D13	H-7	S13	G-7
D15	J-7	S14	H-7
D17	M-7	S15	J-7
D21	N-7	S16	K-7
D23	P-7	S17	L-7
D25	A-6	S18	M-7
D27	B-6	S21	M-7
D31	C-6	S22	N-7
D33	D-6	S23	P-7
D35	F-6	S24	P-7
D41	D-5	S25	A-6
D43	F-5	S26	A-6
D45	C-5	S27	B-6
D47	D-4	S28	B-6
D51	F-4	S31	C-6
D53	Q-7	S32	C-6
D101	J-6	S33	D-6
D103	K-6	S34	E-6
D105	M-6	S35	E-6
D107	N-6	S36	F-6
D111	Q-6	S41	C-5
D113	J-5	S42	D-5
D115	K-5	S43	E-5
D117	M-5	S44	F-5
D121	N-5	S45	F-5
D123	Q-5	S46	C-4
D125	J-4	S47	C-4
D127	K-4	S48	E-4
D131	M-4	S51	E-4
D133	N-4	S52	G-4
D135	Q-4	S53	Q-7
D137	P-3	S101	H-6
		S102	J-6
IC1	K-3	S103	K-6
IC2	L-3	S104	L-6
IC3	M-2	S105	M-6
IC4	M-1	S106	M-6
IC5	K-1	S107	N-6
IC6	L-2	S108	P-6
IC7	L-1	S111	P-6
IC8	K-2	S112	Q-6
IC9	E-2	S113	H-5
IC10	D-2	S114	J-5
		S115	K-5
IC12	F-1	S116	L-5
IC13	E-1	S117	M-5
IC14	D-1	S118	N-5
IC15	H-1	S121	N-5
IC16	C-2	S122	P-5
IC17	C-2	S123	P-5
IC18	J-2	S124	Q-5
IC19	G-3	S125	H-4
IC20	G-1	S126	J-4
IC21	G-2	S127	K-4
IC22	H-2	S128	L-4
		S131	M-4
RB1	P-2	S132	M-4
RB2	K-3	S133	N-4
RB3	Q-2	S134	P-4
RB4	M-2	S135	P-4
RB5	F-3	S136	Q-4
RB6	C-1	S137	P-2
RB7	J-3	S138	Q-2

*;B SIDE

KY-241;Switch Board

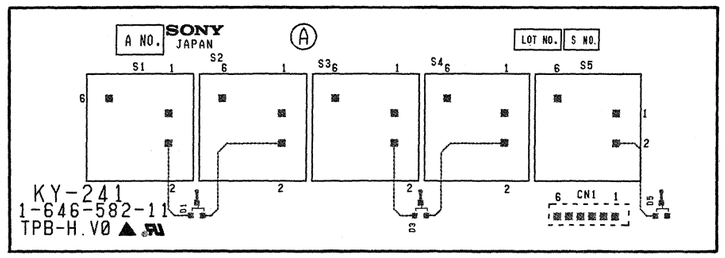

KY-241 -A SIDE-
1-646-582-11
BKDS-6010

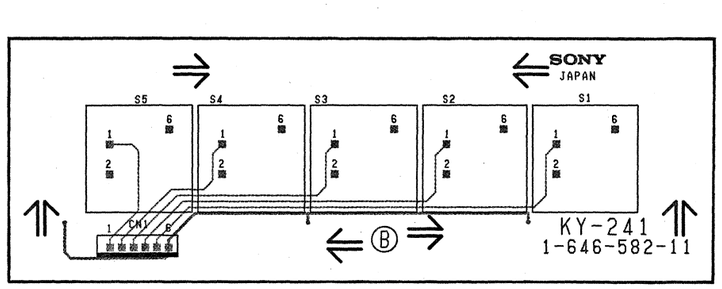

KY-241 -B SIDE-
1-646-582-11
BKDS-6010

KY-242;Switch Board

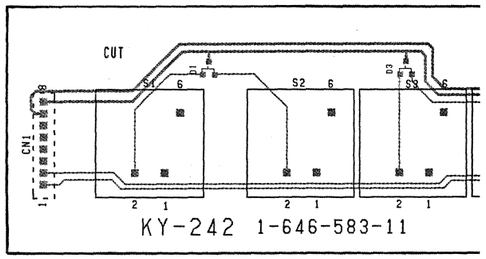

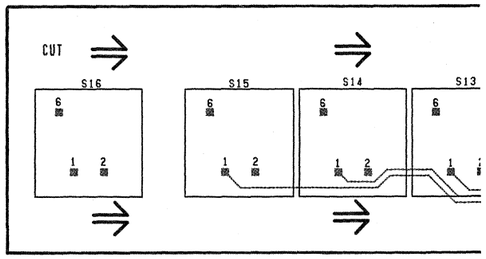

KY-242;Switch Board

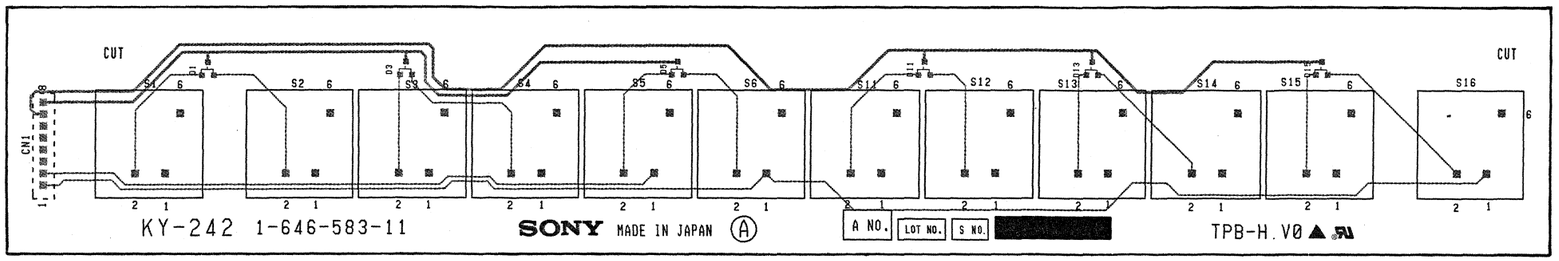

KY-242 -A SIDE-
1-646-583-11
BKDS-6010

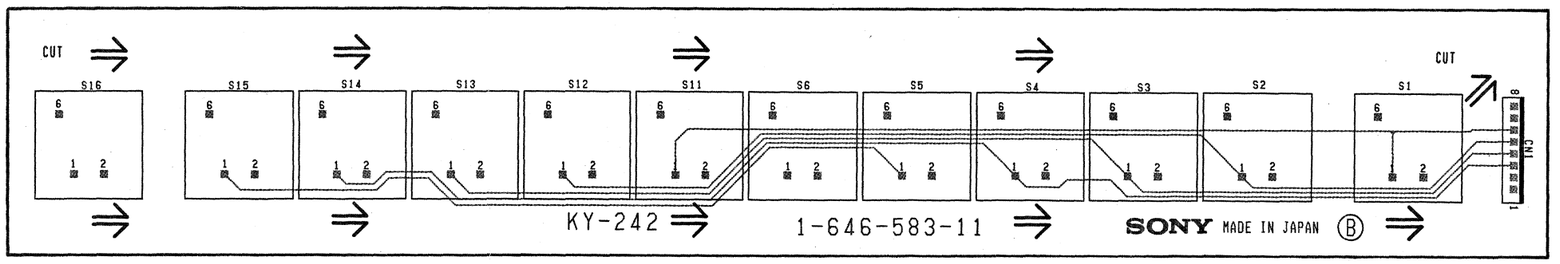

KY-242 -B SIDE-
1-646-583-11
BKDS-6010

KY-243;Switch Board

KY-243(1-646-584-11)

CN1	*B-3	S23	A-2
CN2	*C-5	S24	A-2
CN3	C-5	S25	B-2
CN4	C-5	S26	B-2
CN5	F-4	S27	C-2
CN6	F-4	S28	C-2
		S31	A-3
D1	*A-1	S32	A-3
D3	*B-1	S33	B-3
D5	*C-1	S34	B-3
D7	*A-1	S35	C-3
D11	*B-1	S36	C-3
D13	*C-1	S41	A-4
D15	*A-2	S42	A-4
D17	*B-2	S43	A-4
D21	*C-2	S44	B-4
D23	*A-2	S45	A-5
D25	*B-2	S46	B-5
D27	*C-2	S47	A-5
D31	*A-3	S48	B-5
D33	*B-3	S51	A-5
D35	*C-3	S52	B-5
D41	*A-4	S53	B-5
D43	*A-4	S54	C-5
D45	*A-5	S101	B-4
D47	*A-5	S102	C-4
D51	*A-5	S103	C-4
D53	*C-5	S104	B-4
D101	*B-4	S105	C-4
D103	*C-4	S106	C-4
D105	*C-4	S107	C-5
D107	*B-5	S201	D-4
D201	*D-4	S202	D-4
D203	*D-4	S203	D-4
D205	*D-5	S204	D-4
D207	*D-5	S205	D-5
D211	*D-5	S206	D-5
D301	*E-5	S207	D-5
D303	*E-5	S208	D-5
D305	*G-4	S211	D-5
D307	*G-5	S212	D-5
D311	*E-5	S301	E-5
D313	*F-5	S302	E-5
D315	*F-5	S303	E-5
D317	*F-5	S304	E-4
D321	*F-4	S305	G-4
D323	*F-4	S306	G-5
D325	*F-5	S307	G-5
		S311	E-5
S1	A-1	S312	E-5
S2	A-1	S313	E-5
S3	B-1	S314	G-5
S4	B-1	S315	E-5
S5	C-1	S316	E-5
S6	C-1	S317	G-5
S7	A-1	S321	E-4
S8	A-1	S322	F-4
S11	B-1	S323	F-4
S12	B-1	S324	E-5
S13	C-1	S325	G-5
S14	C-1		
S15	A-2	*;B SIDE	
S16	A-2		
S17	B-2		
S18	B-2		
S21	C-2		
S22	C-2		

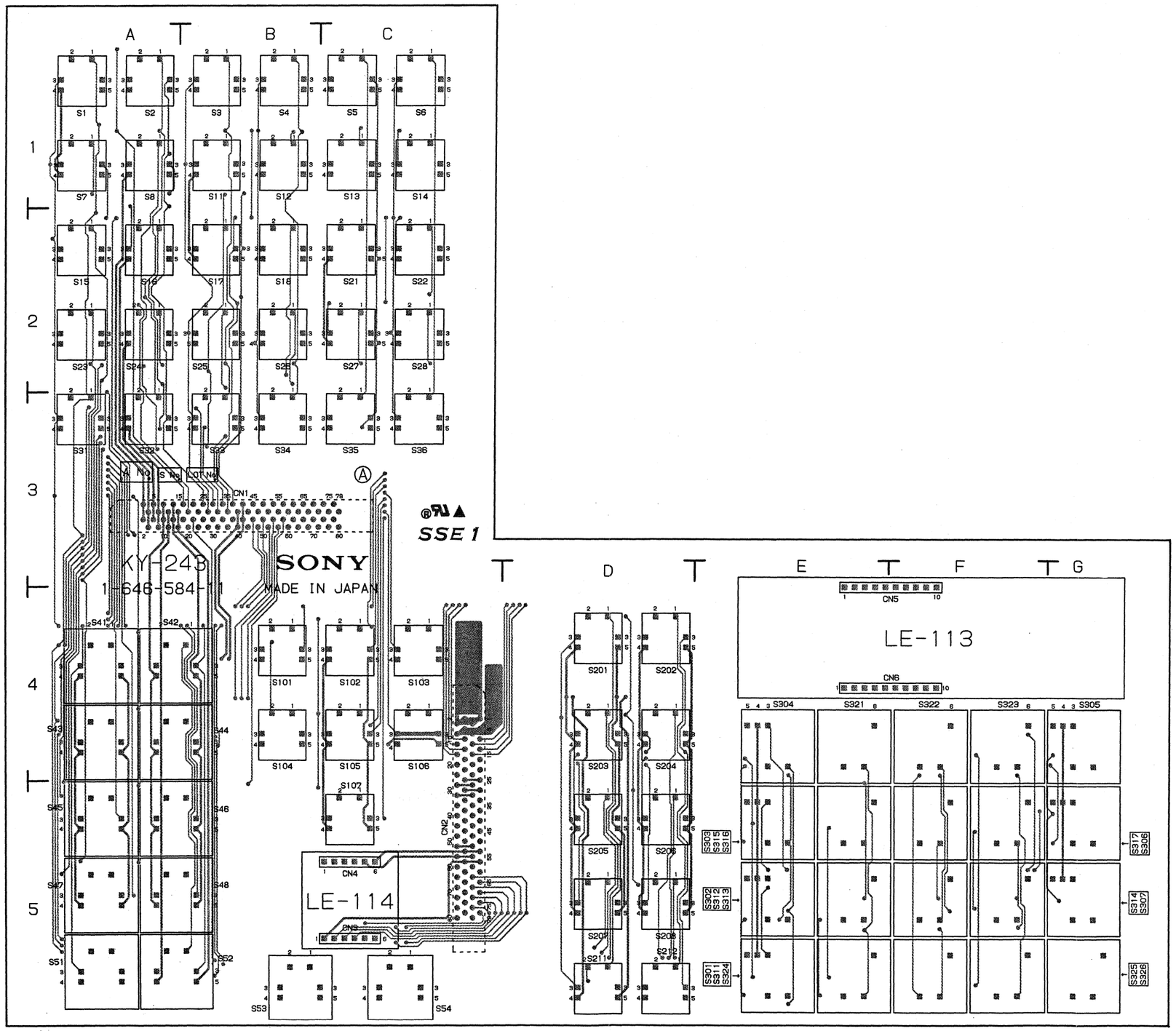

KY-243 -A SIDE-
1-646-584-11
BKDS-6010

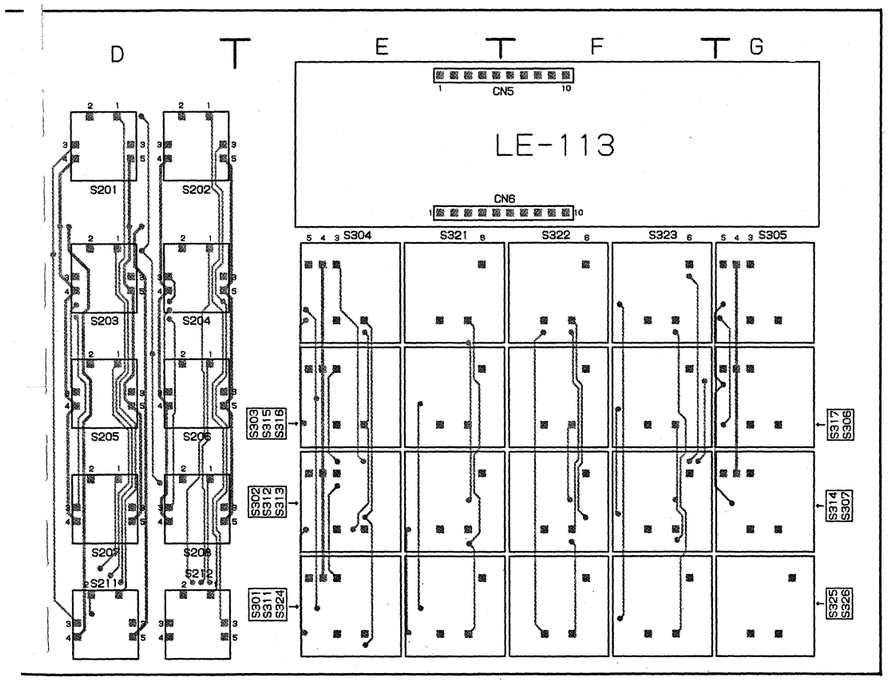

KY-243 -A SIDE-
1-646-584-11
BKDS-6010

KY-243;Switch Boar

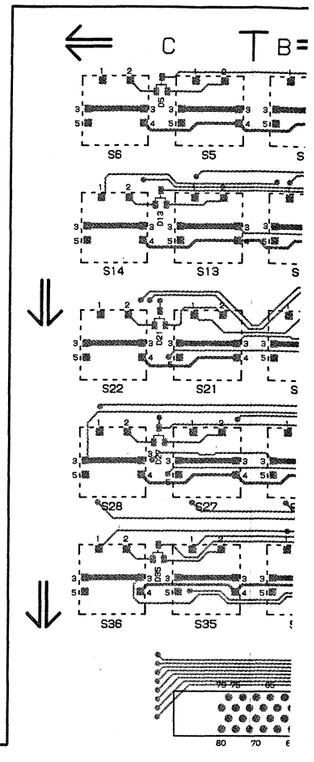

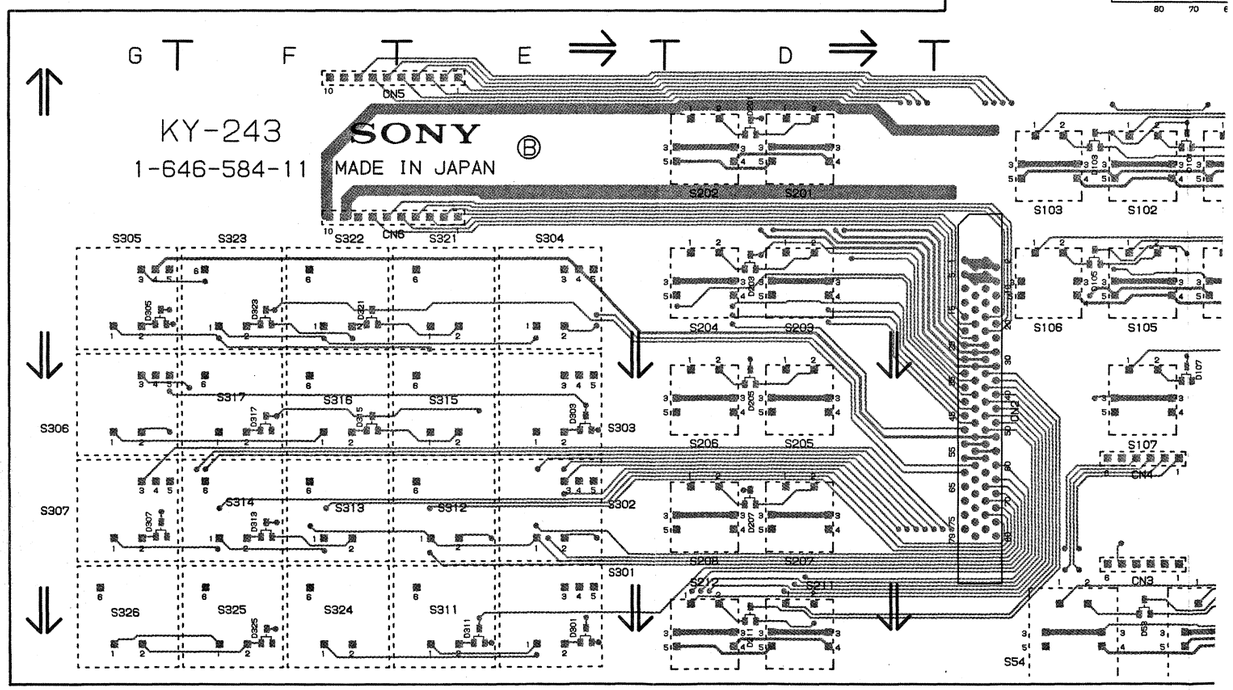

KY-243;Switch Board

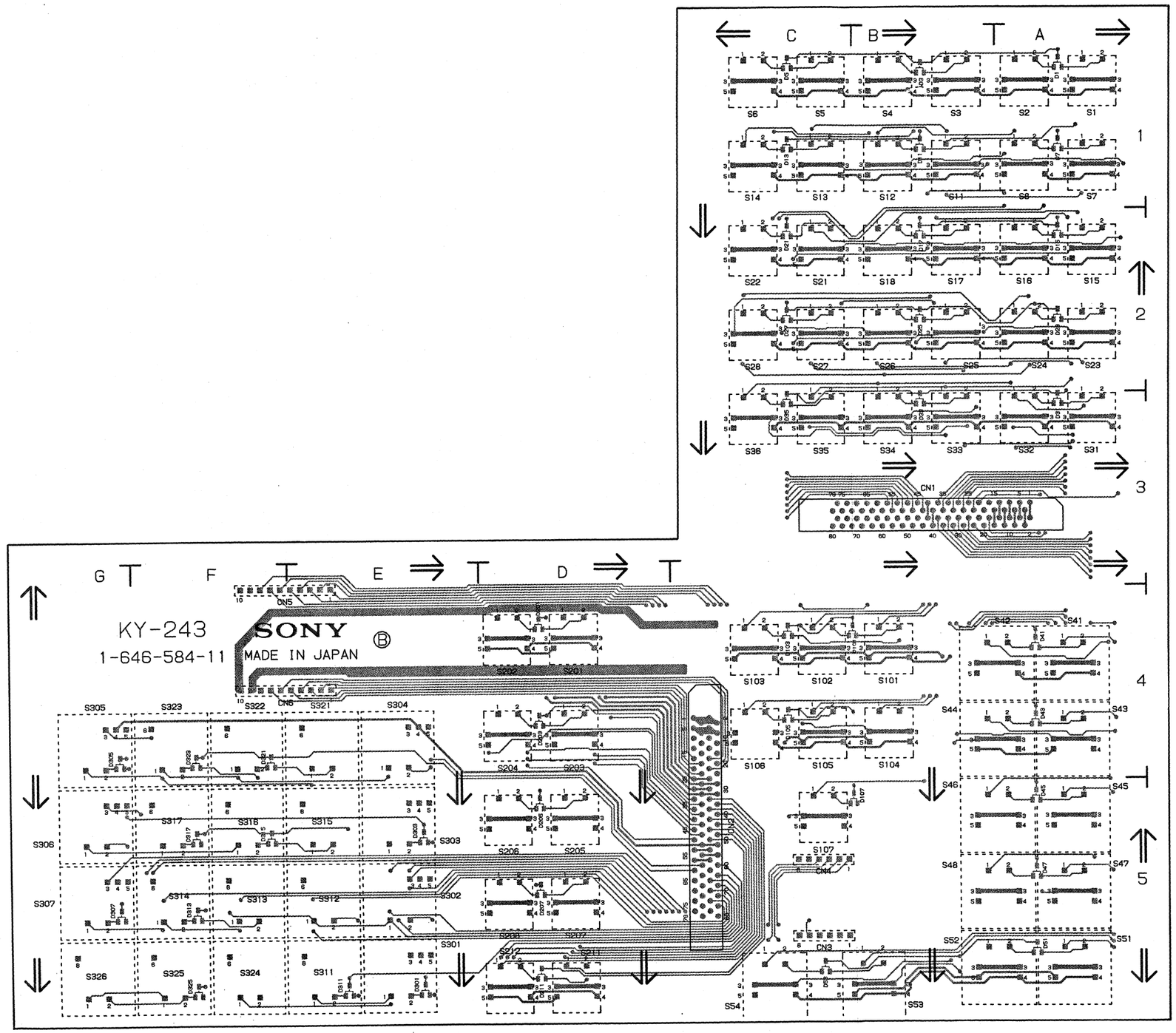

KY-243 -B SIDE-
1-646-584-11
BKDS-6010

KY-243(1-646-584-11)

CN1	*B-3	S23	A-2
CN2	*C-5	S24	A-2
CN3	C-5	S25	B-2
CN4	C-5	S26	B-2
CN5	F-4	S27	C-2
CN6	F-4	S28	C-2
		S31	A-3
D1	*A-1	S32	A-3
D3	*B-1	S33	B-3
D5	*C-1	S34	B-3
D7	*A-1	S35	C-3
D11	*B-1	S36	C-3
D13	*C-1	S41	A-4
D15	*A-2	S42	A-4
D17	*B-2	S43	A-4
D21	*C-2	S44	B-4
D23	*A-2	S45	A-5
D25	*B-2	S46	B-5
D27	*C-2	S47	A-5
D31	*A-3	S48	B-5
D33	*B-3	S51	A-5
D35	*C-3	S52	B-5
D41	*A-4	S53	B-5
D43	*A-4	S54	C-5
D45	*A-5	S101	B-4
D47	*A-5	S102	C-4
D51	*A-5	S103	C-4
D53	*C-5	S104	B-4
D101	*B-4	S105	C-4
D103	*C-4	S106	C-4
D105	*C-4	S107	C-5
D107	*B-5	S201	D-4
D201	*D-4	S202	D-4
D203	*D-4	S203	D-4
D205	*D-5	S204	D-4
D207	*D-5	S205	D-5
D211	*D-5	S206	D-5
D301	*E-5	S207	D-5
D303	*E-5	S208	D-5
D305	*G-4	S211	D-5
D307	*G-5	S212	D-5
D311	*E-5	S301	E-5
D313	*F-5	S302	E-5
D315	*F-5	S303	E-5
D317	*F-5	S304	E-4
D321	*F-4	S305	G-4
D323	*F-4	S306	G-5
D325	*F-5	S307	G-5
		S311	E-5
S1	A-1	S312	E-5
S2	A-1	S313	E-5
S3	B-1	S314	G-5
S4	B-1	S315	E-5
S5	C-1	S316	E-5
S6	C-1	S317	G-5
S7	A-1	S321	E-4
S8	A-1	S322	F-4
S11	B-1	S323	F-4
S12	B-1	S324	E-5
S13	C-1	S325	G-5
S14	C-1		
S15	A-2	*;B SIDE	
S16	A-2		
S17	B-2		
S18	B-2		
S21	C-2		
S22	C-2		

KY-244;Switch Board

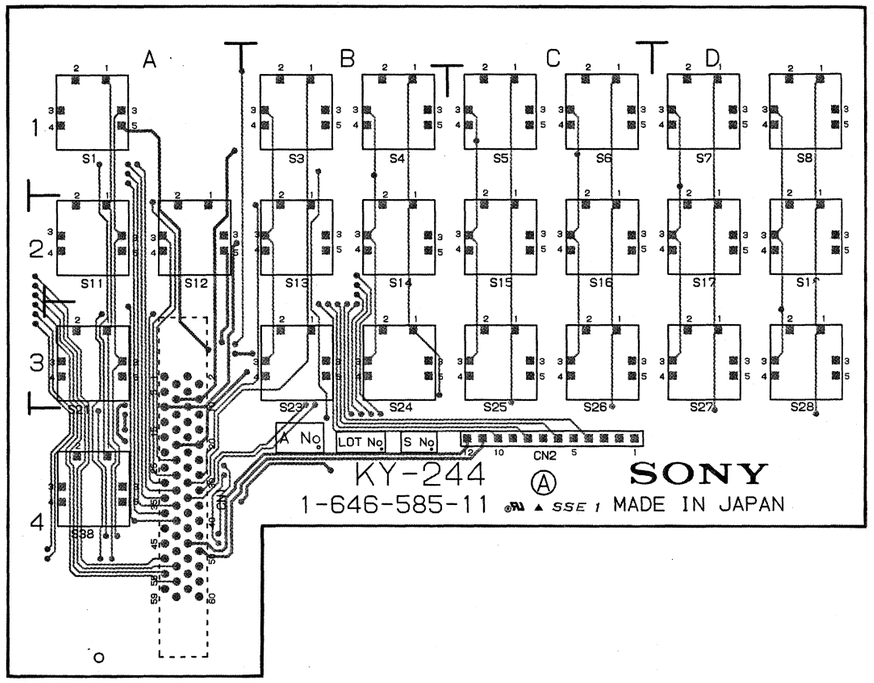

KY-244 -A SIDE-
1-646-585-11
BKDS-6010

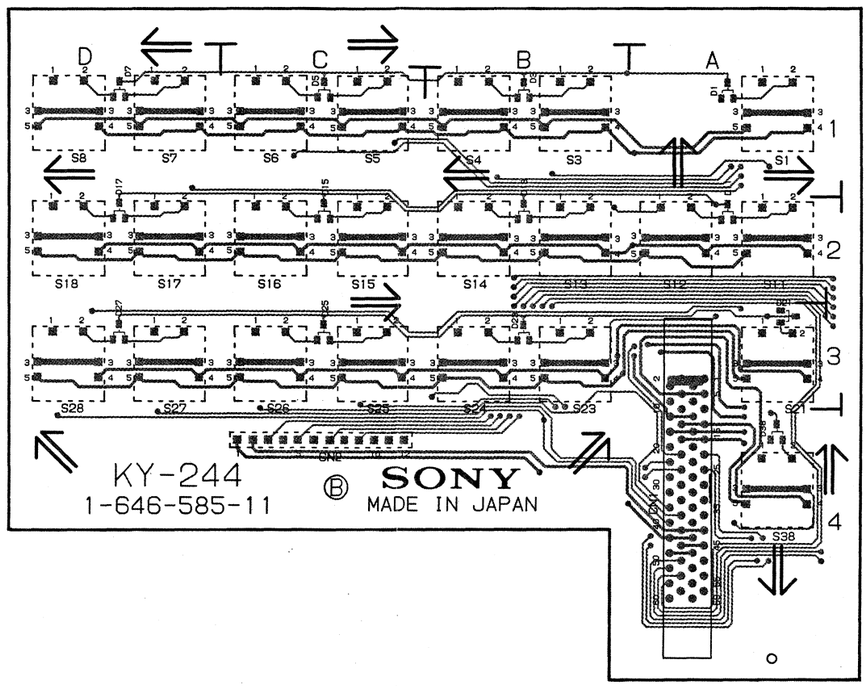

KY-244 -B SIDE-
1-646-585-11
BKDS-6010

KY-245;Switch Board

KY-245(1-646-586-11)

CN1	*E-1
CN2	*F-3
CN3	*C-7
CN4	*C-6
CN5	*C-4
CN6	*C-3
D3	*B-6
D5	*B-3
D7	*D-7
D11	*D-6
D13	*D-5
D15	*D-5
D17	*E-3
D21	*E-2
D23	*E-2
D25	*E-2
D27	*F-2
D31	*B-2
D33	*B-1
S3	B-7
S4	B-6
S5	B-5
S6	B-4
S7	C-7
S8	D-7
S11	C-6
S12	D-6
S13	C-5
S14	D-5
S15	C-5
S16	D-5
S17	D-3
S18	E-3
S21	D-2
S22	E-2
S23	F-2
S24	D-2
S25	E-2
S26	F-2
S27	G-2
S31	B-2
S32	B-1
S33	A-1
S34	C-2
S51	C-7

*;B SIDE

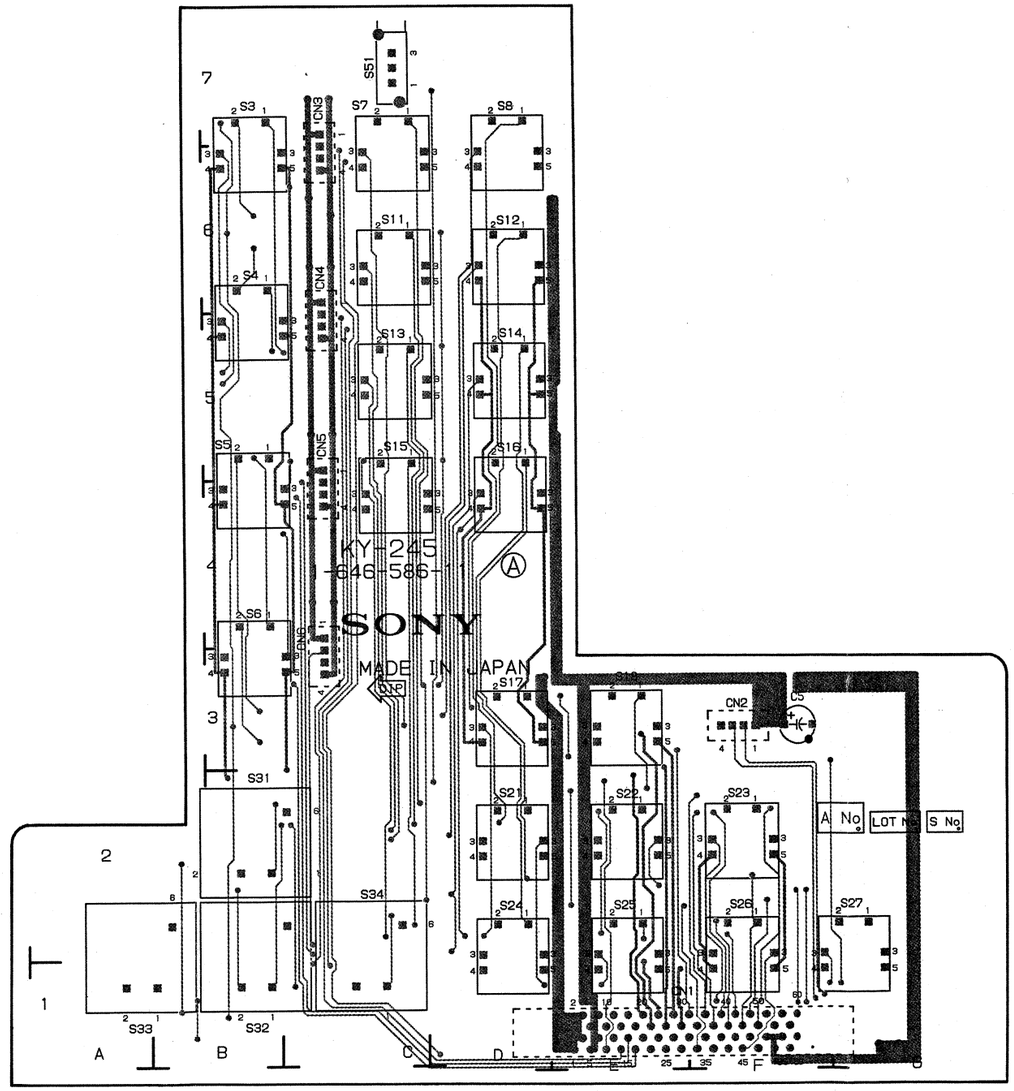

KY-245-A SIDE-
1-646-586-11
BKDS-6010

7-22

KY-245;Switch Board

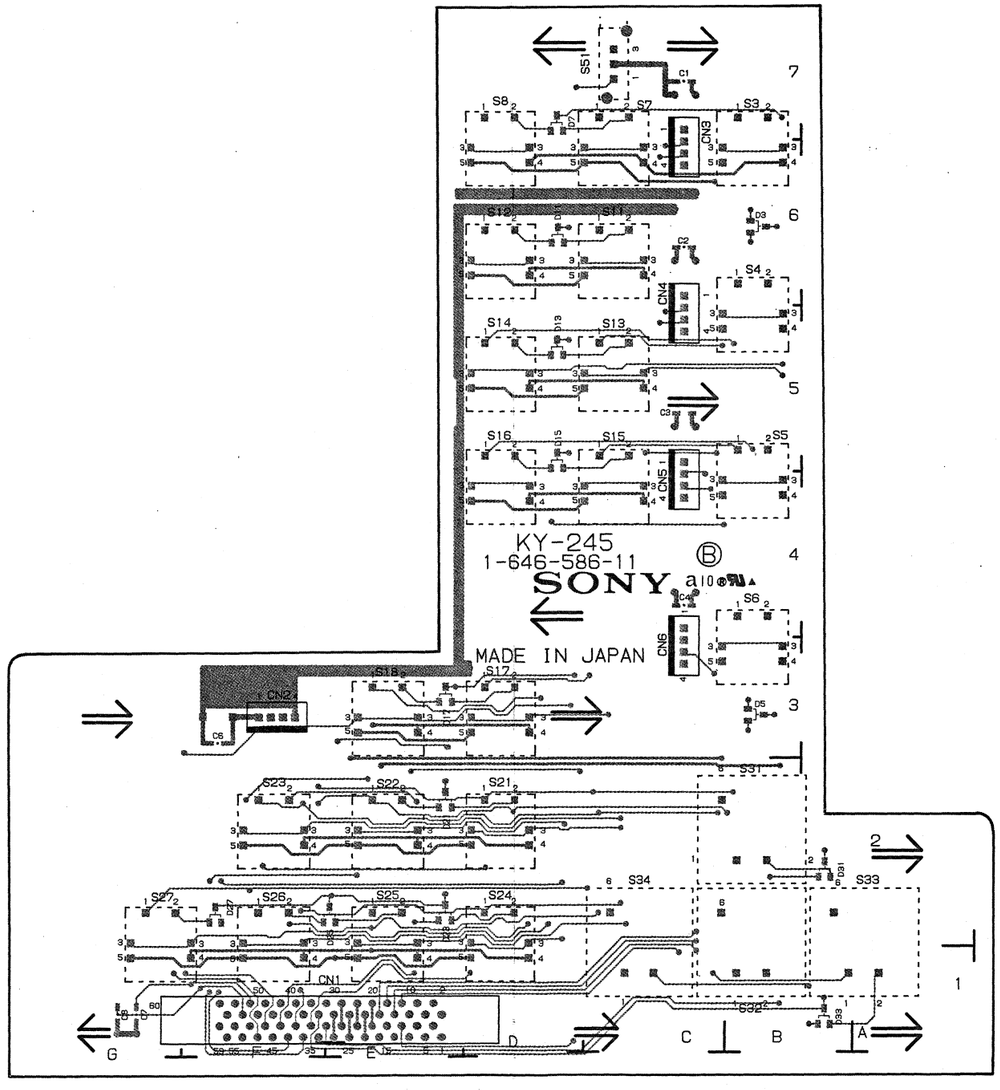

KY-245 -B SIDE-
1-646-586-11
BKDS-6010

KY-245(1-646-586-11)

CN1	*E-1
CN2	*F-3
CN3	*C-7
CN4	*C-6
CN5	*C-4
CN6	*C-3
D3	*B-6
D5	*B-3
D7	*D-7
D11	*D-6
D13	*D-5
D15	*D-5
D17	*E-3
D21	*E-2
D23	*E-2
D25	*E-2
D27	*F-2
D31	*B-2
D33	*B-1
S3	B-7
S4	B-6
S5	B-5
S6	B-4
S7	C-7
S8	D-7
S11	C-6
S12	D-6
S13	C-5
S14	D-5
S15	C-5
S16	D-5
S17	D-3
S18	E-3
S21	D-2
S22	E-2
S23	F-2
S24	D-2
S25	E-2
S26	F-2
S27	G-2
S31	B-2
S32	B-1
S33	A-1
S34	C-2
S51	C-7

*;B SIDE

7-23

KY-246;Switch Board

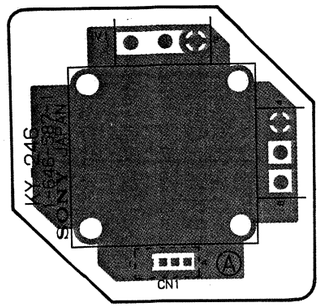

KY-246 -A SIDE-
1-646-587-11
BKDS-6010

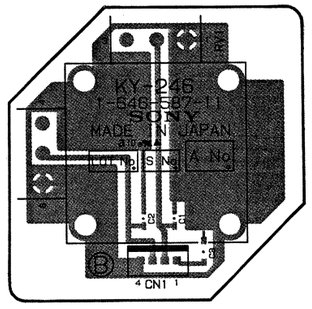

KY-246 -B SIDE-
1-646-587-11
BKDS-6010

7-24

LE-111;LED Board

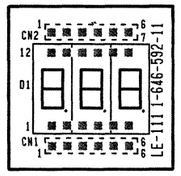

LE-111-A SIDE-
1-646-592-11
BKDS-6010

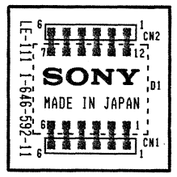

LE-111-B SIDE-
1-646-592-11
BKDS-6010

LE-112;LED Board

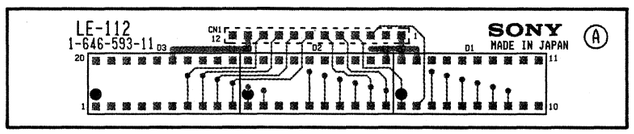

LE-112-A SIDE-
1-646-593-11
BKDS-6010

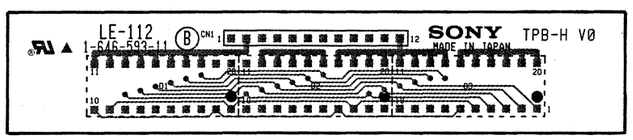

LE-112-B SIDE-
1-646-593-11
BKDS-6010

LE-113;LED Board

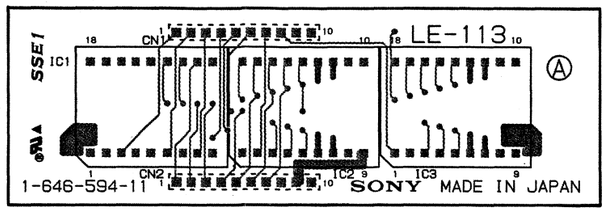

LE-113-A SIDE-
1-646-594-11
BKDS-6010

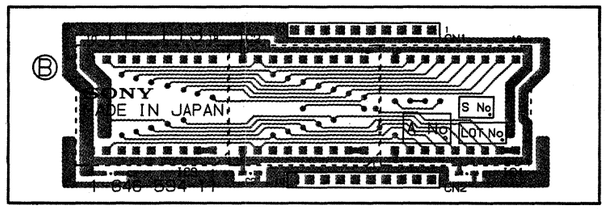

LE-113-B SIDE-
1-646-594-11
BKDS-6010

LE-114;LED Board

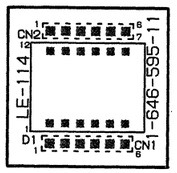

LE-114-A SIDE-
1-646-595-11
BKDS-6010

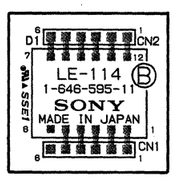

LE-114-B SIDE-
1-646-595-11
BKDS-6010

LE-115;LED Board

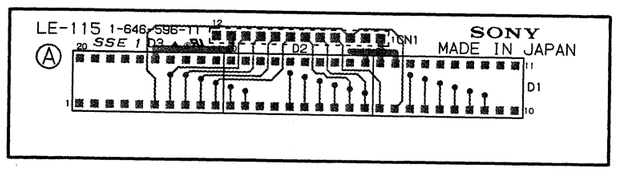

LE-115-A SIDE-
1-646-596-11
BKDS-6010

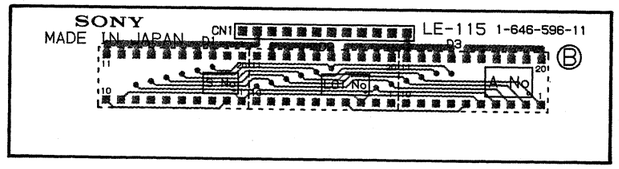

LE-115-B SIDE-
1-646-596-11
BKDS-6010

7-26

CN-789;Connector Board

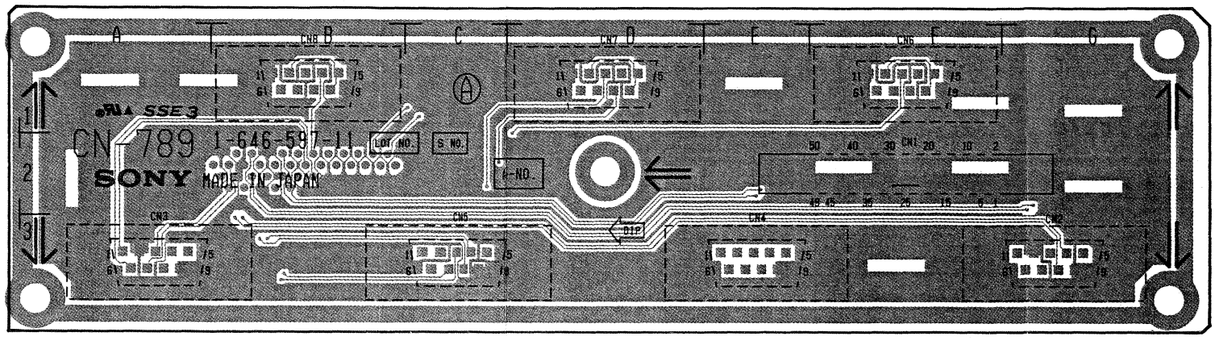

CN-789-A SIDE-
1-646-597-11
BKDS-6010

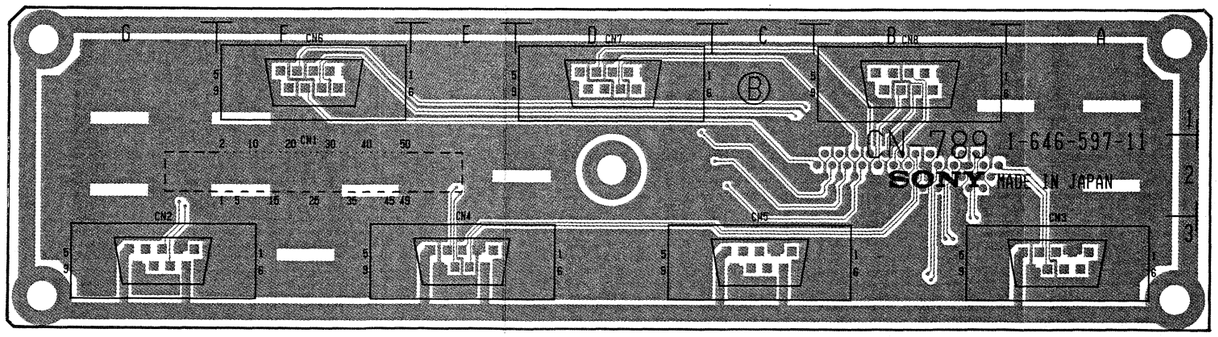

CN-789-B SIDE-
1-646-597-11
BKDS-6010

7-27

CN-790;Connector Board

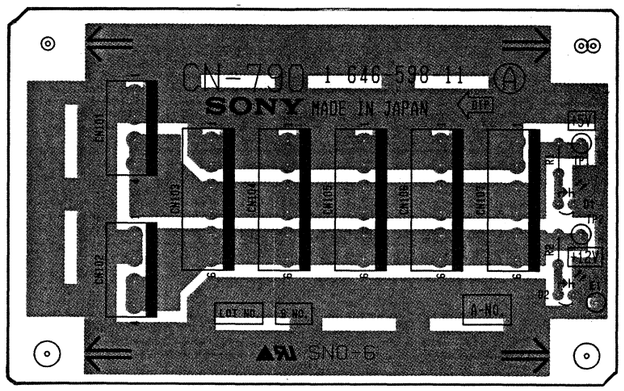

CN-790 -A SIDE-
1-646-598-11
BKDS-6010

7-28

SECTION 8
SEMICONDUCTOR PIN ASSIGNMENTS

ここに記載されているIC、トランジスタ、ダイオードは、それぞれの機能を等価的に表したものです。したがって、互換性を表すものではありません。(互換性のない型名が併記されていることもあります。) 部品の交換をするときは、SPARE PARTSの章を参照してください。

ICs, transistors and diodes of which functions are equivalent are described here. Therefore, incompatible device names may be described together. For parts replacement, refer to the Spare Parts section in this manual.

IC	PAGE
74AC273SJ	8-2
74ACT257SJ	8-2
74F38SJ	8-2
AM26LS31CNS	8-2
AM26LS32ACNS	8-3
AM27C101-120DC	8-2
CAT35C104HP	8-3
CAT35C104K	8-3
CX20158	8-4
CX20201A-1	8-9
CX22029	8-4
CX23065A	8-15
CXA1389AQ	8-15
CXD1095Q	8-3
CXD1217M	8-8
CXD1312Q	8-6
CXD1319AQ	8-4
CXD8026Q	8-5
CXD8052Q	8-12
CXD8053Q	8-10
CXD8055	8-14
CXD8056Q	8-11
CXD8058Q	8-17
CXD8059	8-16
CXD8060Q	8-20
CXD8061	8-18
CXD8062Q	8-22
CXD8063Q	8-23
CXD8065	8-19
CXD8066	8-24
CXD8067	8-26
CXD8190Q	8-28
CXD8258Q	8-5
CXD8300Q	8-5
CXD8338AQ	8-25
CXD8364Q	8-21
CXD8827Q	8-30
DS1000M-50	8-30
GAL16V8A-15LP	8-30
GAL16V8A-25LP	8-30
GAL16V8B-10LP	8-30
HD647180X	8-32
HD647180XOCP6	8-34
HM628128LPF-7	8-30
HM63021FP-28	8-36
HM63021P-28	8-36
ICL7621BCSA	8-36
LM1881	8-36
LM360M	8-36
LT1009CZ	8-36
LT1191CS8	8-36
LT1227CS8	8-37
MAX232CPE	8-37
MAX691CPE	8-37
MB766P	8-37
MB8421-90LPFQ	8-38
MB84256A-10LPF	8-37
MB8431-90LPFQ	8-38
MB88325PF	8-39
MB88346BPF	8-40
MB89322APFQ	8-40
MB89394-PF	8-41
MC10125L	8-42
MC10H124M	8-42
MC10H125M	8-42
MC14495P1	8-40
MC34051P	8-42
MC68882RC25	8-43
MC74HC589F	8-42
MC74HC595AF	8-42
MN6557AS	8-43
MSM514221A-4RS	8-44
RTC-62421B	8-44
SBX1601A	8-44
SBX1602A	8-45
SN74HC00ANS	8-45
SN74HC02ANS	8-45
SN74HC04ANS	8-45
SN74HC109ANS	8-46
SN74HC138ANS	8-46
SN74HC139ANS	8-46
SN74HC14ANS	8-46
SN74HC157ANS	8-46
SN74HC163ANS	8-46
SN74HC164ANS	8-47
SN74HC174ANS	8-47
SN74HC175ANS	8-47
SN74HC238ANS	8-47
SN74HC241ANS	8-47
SN74HC245ANS	8-47
SN74HC251ANS	8-48
SN74HC32ANS	8-48
SN74HC367ANS	8-48
SN74HC393ANS	8-48
SN74HC540ANS	8-48
SN74HC541ANS	8-48
SN74HC574ANS	8-49
SN74HC74ANS	8-49
SN74HC86ANS	8-49
SN74HCT139ANS	8-46
SN74HCT574ANS	8-49
SN74LS594N	8-49
SN75ALS194N	8-49
SN75ALS195J	8-49
SM6103S	8-45
TC4S66F	8-50
TC7S32F	8-51
TC7SU04F	8-51
TC74AC00F	8-45
TC74AC02F	8-45
TC74AC04F	8-45
TC74AC08F	8-50
TC74AC138F	8-46
TC74AC139F	8-46
TC74AC157F	8-46
TC74AC163F	8-46
TC74AC164F	8-47
TC74AC174F	8-47
TC74AC240F	8-50
TC74AC245F	8-47
TC74AC245P	8-47
TC74AC257F	8-2
TC74AC299F	8-50
TC74AC32F	8-48
TC74AC367F	8-48
TC74AC540F	8-48
TC74AC541F	8-48
TC74AC564F	8-50
TC74AC574F	8-49
TC74AC74F	8-49
TC74AC86F	8-49
TC74ACT139F	8-46
TC74ACT157F	8-46
TC74ACT245F	8-47
TC74ACT541F	8-48
TC74ACT574F	8-49
TC74ACT74F	8-49
TC74HC123AF	8-51
TC74HC4051AF	8-51
TC74HC4053AF	8-50
TC74HC595AF	8-42
TC74HCT86AF	8-49
TD62083F	8-51
TD62783F	8-51
TL082CPS	8-51
TL084CNS	8-51
TL431CPL	8-52
TLC372CPS	8-52
TMP82C79M-2	8-53
UPC4558G2	8-52
UPD28C64C-20	8-52
UPD431000AGW-70L	8-52
UPD4701AC	8-54
UPD7004C	8-55
WS27C010L-12D	8-54
WS57C291B-35T	8-54
WS57C45-35T	8-55
WS57C49B-35T	8-56
TRANSISTOR	
2SA1150	8-56
2SA1162	8-56
2SA1175	8-56
2SA1462	8-56
2SC2757	8-56
2SC2785	8-56
2SC3053	8-56
2SC3356	8-56
DIODE	
30D4	8-56
1S2836	8-56
1S953	8-56
1SS226	8-56
1SS271	8-56
CR6CM	8-56
GL-6R202	8-56
LB-203ML	8-57
LD-010MW	8-57
LN15BP	8-57
LN35BP	8-57
MA152WK	8-57
RD??ESB?	8-57
S25VB40	8-57
SLR-34VC3	8-57
TLR214	8-57

等価回路はICメーカーのData Bookに従いました。

The circuit diagram of each IC is obtained from the IC data book published by the manufacturer.

IC

74AC273SJ (NS) FLAT PACKAGE

C-MOS OCTAL D-TYPE FLIP-FLOPS WITH RESET
– TOP VIEW –

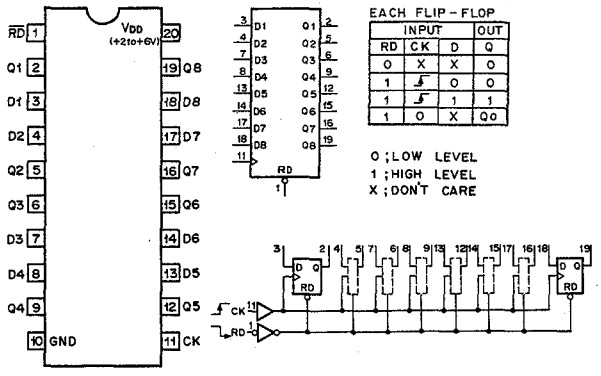

EACH FLIP – FLOP

INPUT			OUT
RD	CK	D	Q
0	X	X	0
1	↑	0	0
1	↑	1	1
1	0	X	Q0

0 ; LOW LEVEL
1 ; HIGH LEVEL
X ; DON'T CARE

74ACT257SJ (NS) FLAT PACKAGE
TC74AC257F (TOSHIBA) FLAT PACKAGE

C-MOS 2-LINE-TO-1-LINE DATA SELECTOR/MULTIPLEXER
– TOP VIEW –

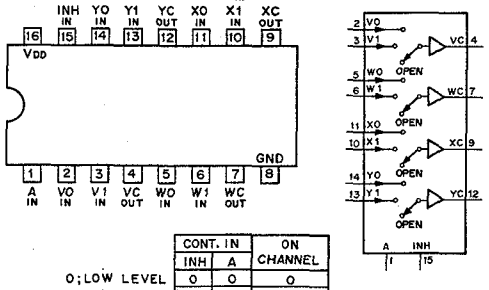

CONT. IN		ON
INH	A	CHANNEL
0	0	0
0	1	1
1	X	OPEN

0 ; LOW LEVEL
1 ; HIGH LEVEL
X ; DON'T CARE

NOTE :

TYPE	VDD
74AC/74HC	+2 to +6V
74ACT	+5V
TC74AC257F	+2 to +5.5V

74F38SJ (NS) FLAT PACKAGE

TTL 2-INPUT POSITIVE-NAND GATE BUFFER
WITH OPEN-COLLECTOR
– TOP VIEW –

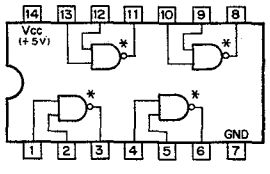

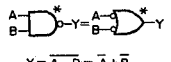

$Y = \overline{A \cdot B} = \overline{A} + \overline{B}$

A	B	Y
0	0	1
0	1	1
1	0	1
1	1	0

0 ; LOW LEVEL
1 ; HIGH LEVEL
* ; OPEN COLLECTOR

AM26LS31CNS (TI) FLAT PACKAGE

HIGH SPEED DIFFERENTIAL LINE DRIVER
– TOP VIEW –

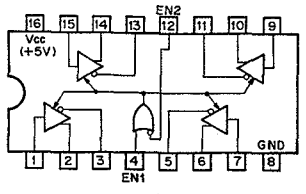

FUNCTION TABLE

EN2	EN1	OUTPUT
0	0	ENABLE
0	1	ENABLE
1	0	HI-Z
1	1	ENABLE

0 ; LOW LEVEL
1 ; HIGH LEVEL
HI-Z ; HIGH IMPEDANCE

AM27C010-120DC (AMD)

C-MOS 1M (131072x8)-BIT EPROM
– TOP VIEW –

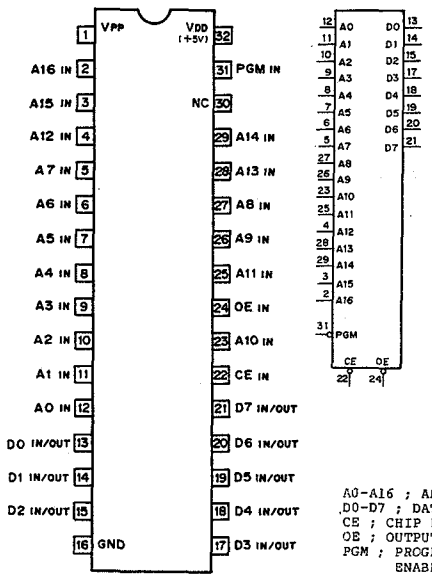

A0–A16 ; ADDRESS INPUTS
D0–D7 ; DATA INPUTS/OUTPUTS
CE ; CHIP ENABLE INPUT
OE ; OUTPUT ENABLE INPUT
PGM ; PROGRAM INPUT/OUTPUT ENABLE INPUT

READ MODE (V_{DD}=+5V, Vpp=+5V)

OE	CE	PGM	A0–A16	D0–D7	FUNCTION
0	0	1	A IN	D OUT	ACTIVE
X	1	X	X	HI-Z	STANDBY
1	0	X	A IN	OUTPUT	
X	0	0	A IN	HI-Z	DISABLE

0; LOW LEVEL
1; HIGH LEVEL
X; DON'T CARE
HI-Z; HIGH-IMPEDANCE

PROGRAM MODE (V_{DD}=+6V, Vpp=+12.5V)

MODE	OE	CE	PGM	A0 – A16	D0-D7	FUNCTION
1-BYTE PROGRAM MODE	1	0	0	A IN	D IN	PROGRAM
	0	0	1	A IN	D OUT	VERIFY
	1	0	1	A IN	HI-Z	PROGRAM INHIBIT
	1	1	1	A IN	D IN	PROGRAM DATA INPUT
4-BYTE PROGRAM MODE	0	1	0	A0,A1 ; X A2-A16; A IN	HI-Z	PROGRAM
	0	0	1	A IN	D OUT	VERIFY
	0	1	1	A IN	HI-Z	PROGRAM INHIBIT

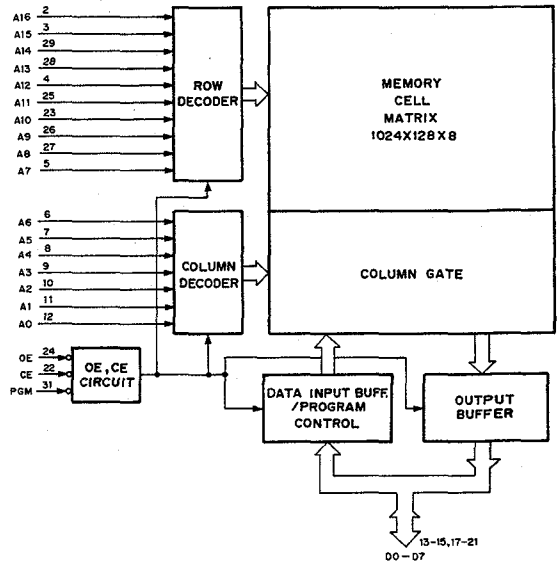

CXD1095Q (SONY) FLAT PACKAGE

C-MOS I/O PORT EXPANDER

– TOP VIEW –

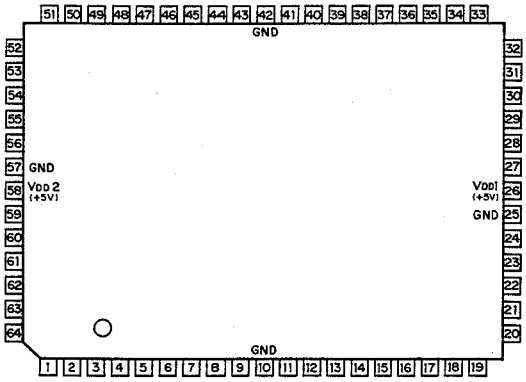

PIN NO.	IN	OUT	SYMBOL	PIN NO.	IN	OUT	SYMBOL	PIN NO.	IN	OUT	SYMBOL	PIN NO.	IN	OUT	SYMBOL
1			NC	17	O	O	PC6	33			NC	49	O	O	PX0
2			NC	18	O	O	PC7	34			NC	50	O	O	PX1
3	O	O	PB1	19			NC	35	O	O	D3	51			NC
4	O	O	PB2	20	O	O	PD0	36	O	O	D4	52	O	O	PX2
5	O	O	PB3	21	O	O	PD1	37	O	O	D5	53	O	O	PX3
6	O	O	PB4	22	O	O	PD2	38	O	O	D6	54	O	O	PA0
7	O	O	PB5	23	O	O	PD3	39	O	O	D7	55	O	O	PA1
8	O	O	PB6	24	O	O	PD4	40	O		CLR	56	O	O	PA2
9	O	O	PB7	25			GND	41	O		RST	57			GND
10			GND	26	O		VDD(+5V)	42			GND	58	O		VDD(+5V)
11	O	O	PC0	27	O	O	PD5	43	O		WR	59	O	O	PA3
12	O	O	PC1	28	O	O	PD6	44	O		RD	60	O	O	PA4
13	O	O	PC2	29	O	O	PD7	45	O		CS	61	O	O	PA5
14	O	O	PC3	30	O	O	D0	46	O		A0	62	O	O	PA6
15	O	O	PC4	31	O	O	D1	47	O		A1	63	O	O	PA7
16	O	O	PC5	32	O	O	D2	48	O		A2	64	O	O	PB0

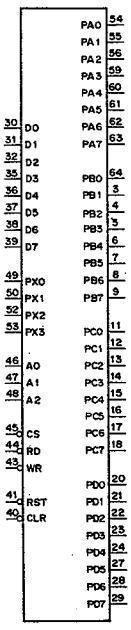

CS	RD	WR	A2	A1	A0	MODE
0	0	1	0	0	0	PORT A→DATA BUS
0	0	1	0	0	1	PORT B→DATA BUS
0	0	1	0	1	0	PORT C→DATA BUS
0	0	1	0	1	1	PORT D→DATA BUS
0	0	1	1	0	0	PORT X→DATA BUS
0	0	1	1	0	1	——
0	0	1	1	1	0	——
0	0	1	1	1	1	——
0	1	0	0	0	0	DATA BUS→PORT A
0	1	0	0	0	1	DATA BUS→PORT B
0	1	0	0	1	0	DATA BUS→PORT C
0	1	0	0	1	1	DATA BUS→PORT D
0	1	0	1	0	0	DATA BUS→PORT X
0	1	0	1	0	1	——
0	1	0	1	1	0	DATA BUS→CTL REG.1
0	1	0	1	1	1	DATA BUS→CTL REG.2
1	X	X	X	X	X	DATA BUS ; HI-Z

O; LOW LEVEL
1; HIGH LEVEL
X; DON'T CARE
HI-Z, HIGH IMPEDANCE

DO–D7 ; DATA BUS INPUTS/OUTPUTS
CS ; CHIP SELECT INPUT
RD ; READ STROBE INPUT
WR ; WRITE STROBE INPUT
A0–A2 ; ADDRESS INPUT
RST ; RESET INPUT
CLR ; CLEAR INPUT
PA0–PA7 ; PORT A INPUTS/OUTPUTS
PB0–PB7 ; PORT B INPUTS/OUTPUTS
PC0–PC7 ; PORT C INPUTS/OUTPUTS
PD0–PD7 ; PORT D INPUTS/OUTPUTS
PX0–PX3 ; PORT X INPUTS/OUTPUTS

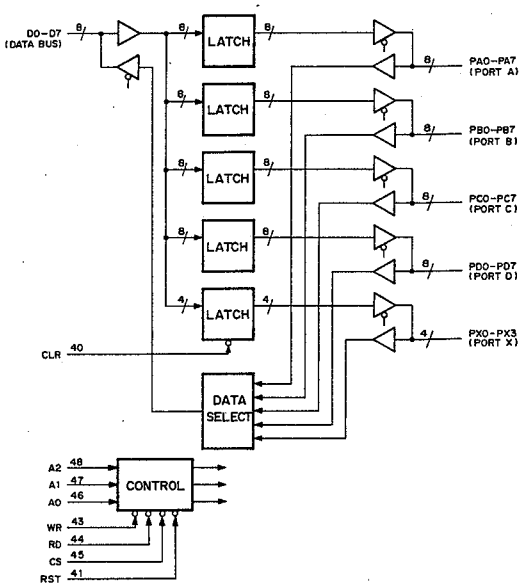

AM26LS32ACNS (TI) FLAT PACKAGE

HIGH SPEED DIFFERENTIAL LINE RECEIVER

– TOP VIEW –

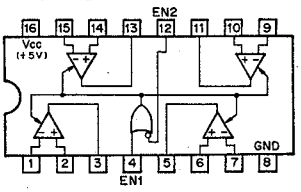

FUNCTION TABLE		
EN2	EN1	OUTPUT
0	0	ENABLE
0	1	ENABLE
1	0	HI-Z
1	1	ENABLE

0; LOW LEVEL
1; HIGH LEVEL
HI-Z; HIGH IMPEDANCE

	SENSE	INPUT VOLT
LS32	±200mV	±7V
LS33	±500mV	±15V

CAT35C104HP (CATALYST SEMICONDUCTOR)

CAT35C104K (CATALYST SEMICONDUCTOR) FLAT PACKAGE

C-MOS 4K-BIT SERIAL EEPROM

– TOP VIEW –

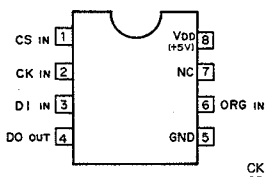

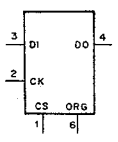

CK ; CLOCK INPUT
CS ; CHIP SELECT
DI ; SERIAL DATA INPUT
DO ; SERIAL DATA OUTPUT
ORG ; MEMORY ORGANIZATION (256×16/512×8)

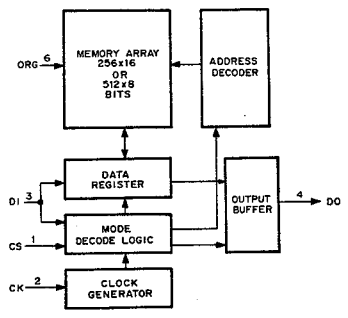

CXD1319AQ (SONY)

C-MOS VIDEO BUFFER MEMORY

– TOP VIEW –

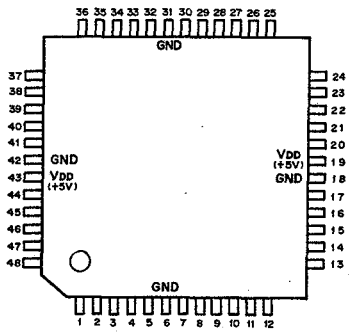

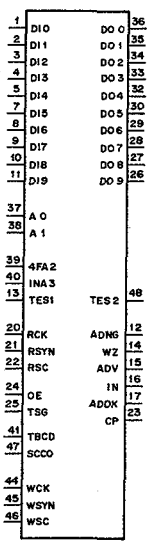

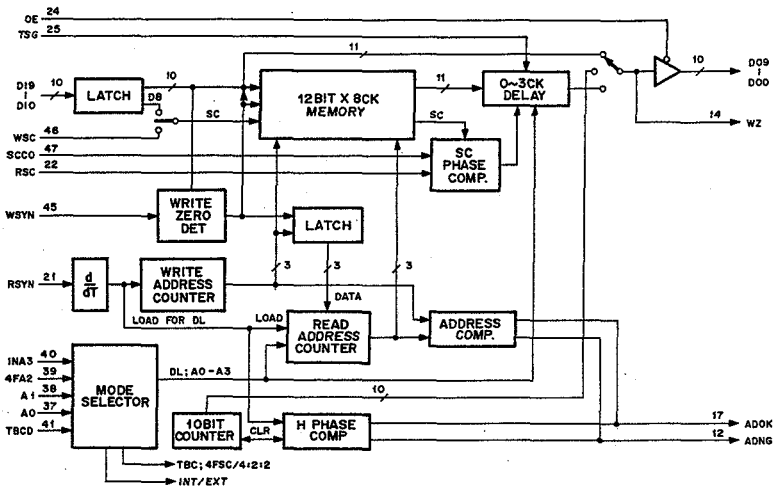

PIN NO.	IN	OUT	SYMBOL	PIN NO.	IN	OUT	SYMBOL	PIN NO.	IN	OUT	SYMBOL	PIN NO.	IN	OUT	SYMBOL
1	O		DI0	13	O		TES1	25	O		TSG	37	O		A0
2	O		DI1	14		O	WZ	26		O	DO9	38	O		A1
3	O		DI2	15		O	ADV	27		O	DO8	39	O		4FA2
4	O		DI3	16		O	IN	28		O	DO7	40	O		INA3
5	O		DI4	17		O	ADOK	29		O	DO6	41	O		TBCD
6			GND	18			GND	30		O	DO5	42			GND
7	O		DI5	19			VDD(+5V)	31			GND	43			VDD(+5V)
8	O		DI6	20	O		RCK	32		O	DO4	44	O		WCK
9	O		DI7	21	O		RSYN	33		O	DO3	45	O		WSYN
10	O		DI8	22	O		RSC	34		O	DO2	46	O		WSC
11	O		DI9	23		O	CP	35		O	DO1	47	O		SCCO
12		O	ADNG	24	O		OE	36		O	DO0	48		O	TES2

INPUT

DI0-DI9; DATA INPUT
TES; TEST
RCK; READ CLOCK INPUT (REFERENCE)
RSYN; READ SYNC INPUT (REFERENCE)
RSC; READ SUB CARRIER INPUT (REFERENCE)
OE; ENABLE OUTPUT (L; OUTPUT/H; HIGH IMPEDANCE)
TSG; TSG MODE APPOINT (L; TSG/H; TBC OR DL MODE)
A0; DL MODE OF DELAY TIME APPOINT
A1; DL MODE: DELAY TIME APPOINT/TBC MODE: 2fH GATE ON, OFF APPOINT (H; ON/L; OFF)
4FA2; DL MODE: DELAY TIME APPOINT/TBC MODE: INPUT PULSE FORMAT APPOINT (H; 4Fsc/L; 4:2:2)
INA3; DL MODE: DELAY TIME APPOINT/TBC MODE: H SYNC DETECT (H; INT/L; EXT)
TBCD; TBC/DL MODE SELECT (H; TBC/L; DL) (TSG LOW; TSG MODE)
WCK; WRITE CLOCK INPUT
WSYN; EXT MODE OF WRITE H SYNC INPUT (INT MODE; NC)
WSC; EXT MODE OF SUB CARRIER INPUT
SCCO; 4Fsc MODE SC OF PHASE ADJUST ONLY: L

OUTPUT

DO0-DO9; DATA OUTPUT
ADNG; TBC UNSTABILIZED; L (READ WRITE 7+1CLOCK)
WZ; VIDEO DATA OUTPUT OF ABSOLUTE PHASE
ADV, IN; WRITE/READ H SYNC OF RELATION

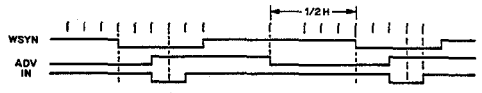

ADOK; TBC STABILIZED; L (READ WRITE 3+1 CLOCK)
CP;

TBCD	4FA2	SCCO	INA3	CP OUTPUT
0	X	0	X	INT13 SYNC+EXT SYNC
0	X	1	X	INT14 SYNC+EXT SYNC
1	0	X	1	INT13 SYNC+EXT SYNC
1	1	X	1	INT14 SYNC EXT SYNC
1	X	X	0	EXT SYNC

0;LOW LEVEL
1;HIGH LEVEL
X;DON'T CARE

INT13 SYNC; D2-D9 DETECTED 13.5M FORMAT SYNC
INT14 SYNC; D2-D9 DETECTED 14.3M FORMAT SYNC
EXT SYNC; INPUT SYNC FROM WSYN (45PIN)

CX20158 (SONY) FLAT PACKAGE

VIDEO SWITCHER AND BUFFER

– TOP VIEW –

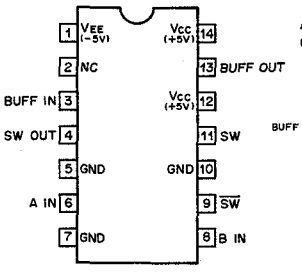

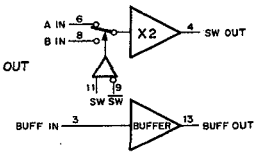

SW	$\overline{SW}$	INPUT
0	0	—
0	1	B
1	0	A
1	1	—

0;LOW LEVEL
1;HIGH LEVEL
–;INDEFINITE

CX22029 (SONY)

TTL-TO-ECL TRANSLATOR

– TOP VIEW –

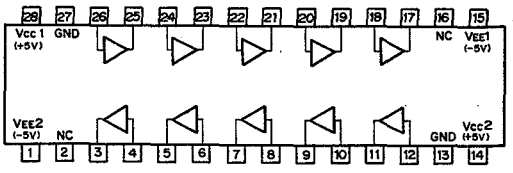

CXD8026Q (SONY) FLAT PACKAGE (STANDARD TYPE)
CXD8258Q (SONY) FLAT PACKAGE (HIGH SPEED TTL I/F TYPE)
CXD8300Q (SONY) FLAT PACKAGE (HIGH SPEED C-MOS TYPE)

C-MOS 8x8 CHANNEL DIGITAL PARALLEL MATRIX SWITCHER (5BIT)
– TOP VIEW –

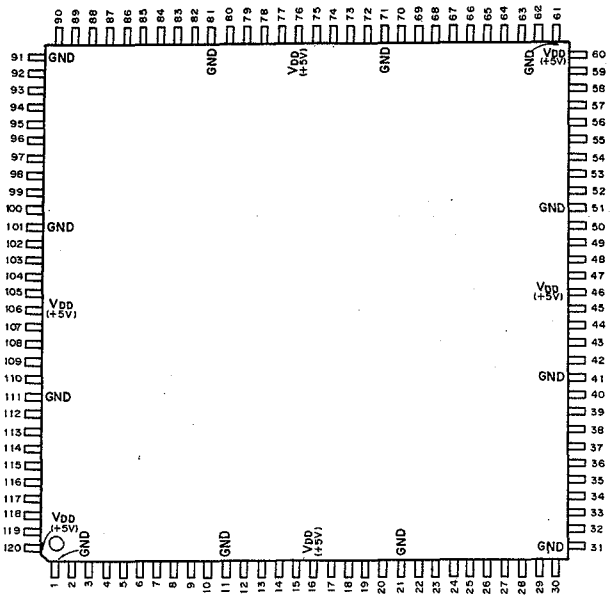

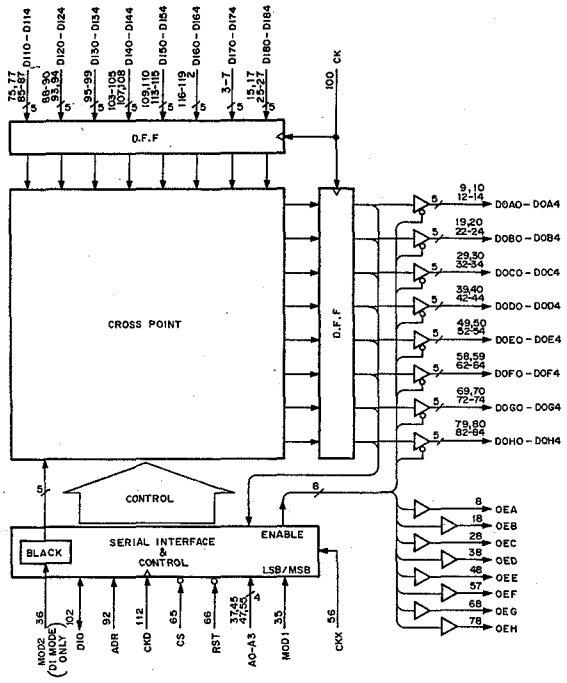

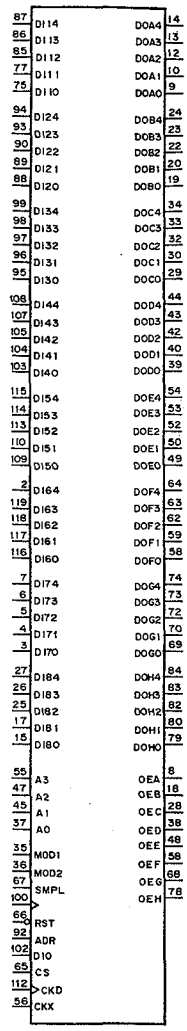

INPUTS

A0 – A3	; CHIP ADDRESS CONTROL
ADR	; ADDRESS
CK	; SYSTEM CLOCK
CKD	; SERIAL INTERFACE CLOCK
CKX	; SWITCHING TIMING PULSE
CS	; CHIP SELECT
DI10 – DI14	; 5 BIT DIGITAL IN (CH1)
DI20 – DI24	; 5 BIT DIGITAL IN (CH2)
DI30 – DI34	; 5 BIT DIGITAL IN (CH3)
DI40 – DI44	; 5 BIT DIGITAL IN (CH4)
DI50 – DI54	; 5 BIT DIGITAL IN (CH5)
DI60 – DI64	; 5 BIT DIGITAL IN (CH6)
DI70 – DI74	; 5 BIT DIGITAL IN (CH7)
DI80 – DI84	; 5 BIT DIGITAL IN (CH8)
MOD1	; MODE 1 SELECT (L : LSB 5 BIT H : MSB 5 BIT)
MOD2	; MODE 2 SELECT (D1 MODE : 13.5 MHz CLOCK INPUT)
RST	; RESET PULSE
SMPL	; SAMPL PULSE

OUTPUTS

DOA0 – DOA4	; 5 BIT DIGITAL OUT (CHA)
DOB0 – DOB4	; 5 BIT DIGITAL OUT (CHB)
DOC0 – DOC4	; 5 BIT DIGITAL OUT (CHC)
DOD0 – DOD4	; 5 BIT DIGITAL OUT (CHD)
DOE0 – DOE4	; 5 BIT DIGITAL OUT (CHE)
DOF0 – DOF4	; 5 BIT DIGITAL OUT (CHF)
DOG0 – DOG4	; 5 BIT DIGITAL OUT (CHG)
DOH0 – DOH4	; 5 BIT DIGITAL OUT (CHH)
OEA – OEH	; ENABLE OUT FOR CHA – CHH

INPUT/OUTPUT

DIO	; SERIAL DATA

(VDD = +5V)

PIN NO.	I/O	SYMBOL	PIN NO.	I/O	SYMBOL	PIN NO.	I/O	SYMBOL	PIN NO.	I/O	SYMBOL
1	–	GND	31	–	GND	61	–	GND	91	–	GND
2	I	DI64	32	O	DOC2	62	O	DOF2	92	I	ADR
3	I	DI70	33	O	DOC3	63	O	DOF3	93	I	DI23
4	I	DI71	34	O	DOC4	64	O	DOF4	94	I	DI24
5	I	DI72	35	I	MOD1	65	I	CS	95	I	DI30
6	I	DI73	36	I	MOD2	66	I	RST	96	I	DI31
7	I	DI74	37	I	A0	67	I	SMPL	97	I	DI32
8	O	OEA	38	O	OED	68	O	OEG	98	I	DI33
9	O	DOA0	39	O	DOD0	69	O	DOG0	99	I	DI34
10	O	DOA1	40	O	DOD1	70	O	DOG1	100	I	CK
11	–	GND	41	–	GND	71	–	GND	101	–	GND
12	O	DOA2	42	O	DOD2	72	O	DOG2	102	I/O	DIO
13	O	DOA3	43	O	DOD3	73	O	DOG3	103	I	DI40
14	O	DOA4	44	O	DOD4	74	O	DOG4	104	I	DI41
15	I	DI80	45	I	A1	75	I	DI10	105	I	DI42
16	–	VDD	46	–	VDD	76	–	VDD	106	–	VDD
17	I	DI81	47	I	A2	77	I	DI11	107	I	DI43
18	O	OEB	48	O	OEE	78	O	OEH	108	I	DI44
19	O	DOB0	49	O	DOE0	79	O	DOH0	109	I	DI50
20	O	DOB1	50	O	DOE1	80	O	DOH1	110	I	DI51
21	–	GND	51	–	GND	81	–	GND	111	–	GND
22	O	DOB2	52	O	DOE2	82	O	DOH2	112	I	CKD
23	O	DOB3	53	O	DOE3	83	O	DOH3	113	I	DI52
24	O	DOB4	54	O	DOE4	84	O	DOH4	114	I	DI53
25	I	DI82	55	I	A3	85	I	DI12	115	I	DI54
26	I	DI83	56	I	CKX	86	I	DI13	116	I	DI60
27	I	DI84	57	O	OEF	87	I	DI14	117	I	DI61
28	O	OEC	58	O	DOF0	88	I	DI20	118	I	DI62
29	O	DOC0	59	O	DOF1	89	I	DI21	119	I	DI63
30	O	DOC1	60	–	VDD	90	I	DI22	120	–	VDD

CXD1312Q (SONY) FLAT PACKAGE

C-MOS VIDEO CLOCK GENERATOR

– TOP VIEW –

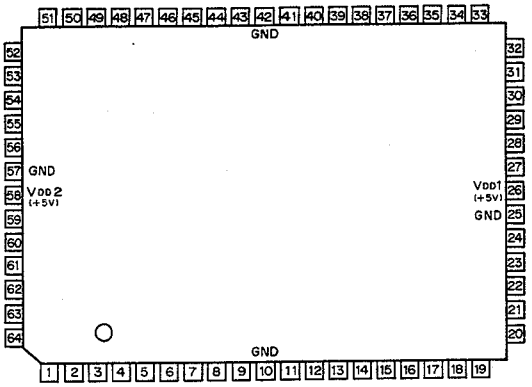

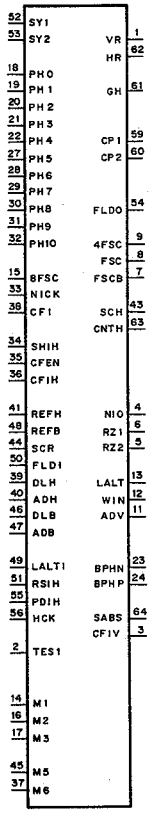

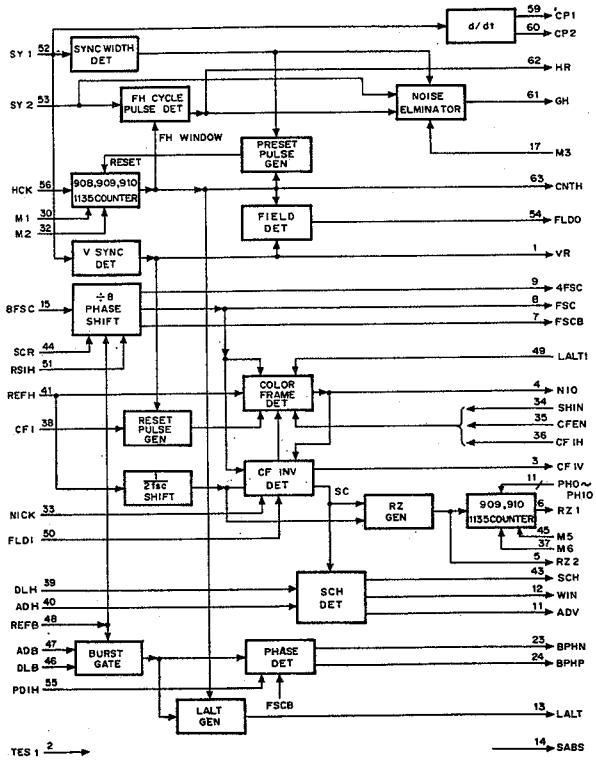

PIN NO.	SIGNAL	DESCRIPTION
1.	VR out	**V SYNC PULSE output** VR is derived from the SY1(pin 52) input.
2.	TES1 in	**TEST MODE input**

TES1	MODE
0	TEST
(1)	NORMAL

0 : Low level
(0): Low level or open
1 : High level
(1): High level or open

3.	CFIV out	**TEST SIGNAL output**
4.	NIO out	**1/2 NI CLOCK output** The frequency of NIO is a half of the NICK(pin 33) input.
5.	RZ2 out	**READ ZERO 2 output** RZ2 is derived from the REFH(pin 41) input and shows the starting timing of each line.
6.	RZ1 out	**READ ZERO 1 output** RZ1 is derived from RZ2(pin 5). RZ1 is delayed by PH0 to PH10 inputs. See the description of the PH0(pin 18)input.
7.	FSCB out	**FSCB PULSE output** FSCB is derived from FSC(pin 8) and its phase is shifted by the LALTI(pin 49) input. The amount of shift is one clock length of the 4FSC (pin-9) input.
8.	FSC out	**FSC CLOCK output**
9.	4FSC out	**4FSC CLOCK output** These are derived from the 8FSC(pin 15) input.
10.	GND	**GND**
11.	ADV out	**SC-H ADVANCE output**
12.	WIN out	**SC-H IN PHASE output** These signals shows the SC-H phase. See the description of the DLH(pin 39) input.
13.	LALT out	**PAL PULSE output** The LALT output is derived from the REFB(pin 48) burst signal in the pal system.
14.	M1 in	**HCK FREQUENCY SELECT input** Set M1 and M2(pin 16) as follows according as the frequency of the HCK(pin 56) input.

FREQ. OF HCK	M1	M2
908 FH	0	0
910 FH	0	(1)
909 FH	(1)	0
1135 FH	(1)	(1)

FH: Frequency of the H sync signal that composes the SY2(pin 53) input.

15.	8FSC in	**8FSC CLOCK input** The rising edge is active. 4FSC(pin 9), FSC(pin 8) and FSCB(pin 7) are derived from 8FSC.
16.	M2 in	**HCK FREQUENCY SELECT input** See the description of the M1(pin 14) input.
17.	M3 in	**NOISE ELIMINATOR ON/OFF SELECT input** M3 sets the noise eliminator for the GH(pin 61) output derived from the SY2(pin 53) input on or off.

M3	NOISE ELIMINATION
0	OFF
(1)	ON

18.	PH0 in	**DELAY CONTROL INPUT FOR RZ1**
19.	PH1 in	**DELAY CONTROL INPUT FOR RZ1**
20.	PH2 in	**DELAY CONTROL INPUT FOR RZ1**
21.	PH3 in	**DELAY CONTROL INPUT FOR RZ1**
22.	PH4 in	**DELAY CONTROL INPUT FOR RZ1** These inputs control the delay time of the RZ1 (pin 6) output as follows:

PH10	9	8	--	2	1	0	DELAY TIME OF RZ1
0	0	0	--	0	0	0	1/(4 Fsc) x 2047
0	0	0	--	0	0	1	1/(4 Fsc) x 2046
0	0	0	--	0	1	0	1/(4 Fsc) x 2045
0	0	0	--	0	1	1	1/(4 Fsc) x 2044
-	-	-	-	-	-	-	- - - - - - - - - -
1	1	1	--	1	0	0	1/(4 Fsc) x 3
1	1	1	--	1	0	1	1/(4 Fsc) x 2
1	1	1	--	1	1	0	1/(4 Fsc) x 1
1	1	1	--	1	1	1	1/(4 Fsc) x 0

23. BPHN out **BURST PHASE-N output**
24. BPHP out **BURST PHASE-P output**
These are the outputs of the phase comparator between the DLB(pin 46)/ADB(pin 47) inputs and the internal SC that is equivalent to the FSCB (pin 7) output.
The PDIH(pin 55) input inhibits the BPHN and BPHP outputs.

PDIH	BPHN/BPHP OUTPUTS
(0)	INHIBIT
1	ENABLE

25. GND **GND**
26. VDD1 **+5V input**

27. PH5 in **DELAY CONTROL INPUT FOR RZ1**
28. PH6 in **DELAY CONTROL INPUT FOR RZ1**
29. PH7 in **DELAY CONTROL INPUT FOR RZ1**
30. PH8 in **DELAY CONTROL INPUT FOR RZ1**
31. PH9 in **DELAY CONTROL INPUT FOR RZ1**
32. PH10 in **DELAY CONTROL INPUT FOR RZ1**
These inputs control the delay time of the RZ1 (pin 6) output. See the description of PH0(pin 18) input.

33. NICK in **NI CLOCK input**
NICK is the clock pulse to generate the NI (normal/invert) pulse to be used internally. Usually, CNTH(pin 63) for the NTSC system or LALT(pin 13) for the PAL system is input to this terminal.
The rising edge is active.

34. SHIH in **MODE SELECT (COLOR FRAMING DET./RZ GEN) input**
35. CFEN in **MODE SELECT (COLOR FRAMING DET./RZ GEN) input**
36. CFIH in **MODE SELECT (COLOR FRAMING DET./RZ GEN) input**
These inputs set CXD1312Q to the color framing detector mode or the read zero generator mode as follows:

SHIH	CFEN	CFIH	MODE
0	(0)	1	COLOR FRAMING DETECTOR
(1)	(0)	(0)	RZ GENERATOR

37. M6 in **SIGNAL SYSTEM SELECT input**
Set M5(pin 45) and M6 as follows according as the video signal to be used.

MODE & VIDEO SIGNAL	M5	M6
TEST	0	0
4FSC/FH=909 : PALM	0	(1)
4FSC/FH=910 : NTSC	(1)	0
4FSC/FH=1135: PAL	(1)	(1)

38. CFI in **COLOR FRAME PULSE input**
This pulse is used for resetting the internal LALT signal in the RZ GENERATOR mode.

39. DLH in **DELAY H input**
40. ADH in **ADVANCE H input**
These H signals are used for the SC-H phase detection. The SC-H phase detector outputs ADV(pin 11) and WIN(pin 12) according as the phase relation between DLH/ADH and the internal SC that is equivalent to FSC(pin 8).
If the internal SC is between ADH and DLH, the WIN output goes to LOW.
If the internal SC is in advance of ADH, the ADV output goes to LOW.
The usual connection is as follows:

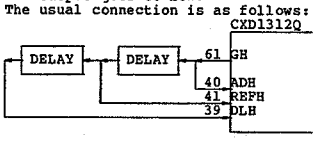

41. REFH in **REFERENCE H PULSE input**
REFH is used for the color framing detector and the RZ generator. GH(pin 61) or HR(pin 62) is usually input to this terminal.

42. GND **GND**

43. SCH out **SC-H PHASE output**
This signal shows the phase difference between REFH(pin 41) and internal SC. When they are in phase, the SCH output is as folows:

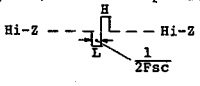

44. SCR in **DIRECT RESET INPUT FOR DIVIDE-BY-8 COUNTER**
This signal resets the divide-by-8 counter of 8FSC(pin 15) input directly.

SCR	DIVIDE-BY-8 COUNTER
(0)	RESET
1	COUNT

45. M5 in **SIGNAL SYSTEM SELECT input**
See the description of the M6(pin 37) input.

46. DLB in **DELAY BURST input**
47. ADB in **ADVANCE BURST input**
These burst signals are used for phase comparison with the internal SC.
The usual connection is as follows:

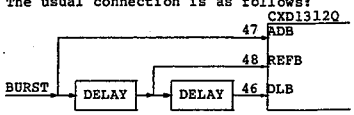

48. REFB in **REFERENCE BURST input**
REFB is used for resetting the divide-by-8 counter. RSIH(pin 51) inhibits the resetting as follows:

RSIH	RESET BY BY REFB
(0)	INHIBIT
1	ENABLE

49. LALTI in **PAL PULSE input**
The PAL pulse should be input to this terminal for the PAL system, but this terminal should be kept open for the NTSC system.

50. FLDI in **PAL FIELD PULSE input**
Phase alternating pulse by field.
The FLDO(pin 54) output is usually input to this terminal for the PAL system, but this terminal should be kept open for the NTSC system.

51. RSIH in **RESET INHIBIT input**
This signal inhibits for the REFB(pin 48) input to reset the divide-by-8 counter of 8FSC(pin 15) input.
See the description of the REFB(pin 48) input.

52. SY1 in **ROUGH SYNC PULSE input (negative pulse)**
VR(pin 1), CP1(pin 59), CP2(pin 60) and the internal gate pulse are derived from SY1.

53. SY2 in **SYNC PULSE input (negative pulse)**
This sync pulse generates GH(pin 61), and GH is input to the SC-H phase detection circuit. See the description of DLH(pin 39) and ADH(pin 40).

54. FLDO out **FIELD PULSE output**
Phase altering pulse by field.

55. PDIH in **BPHN/BPHP OUTPUT INHIBIT input**
This signal inhibits the BPHN(pin 23) and BPHP (pin 24) outputs. See the description of BPHN and BPHP.

56. HCK in **nH CLOCK input**
The frequency of the HCK input has the specified relation with that of the H sync signal that composes the SY2(pin 53) input. See the description of the M1(pin 14) input.

57. GND **GND**
58. VDD2 **+5V input**

59. CP1 out **LEADING EDGE OF SY1(pin 52) output**
60. CP2 out **TRAILING EDGE OF SY1(pin 52) output**

61. GH out **GATED H PULSE output**
62. HR out **H PULSE output**
GH and HR are derived from the SY2(pin 53) sync pulse input. Both signals consist of H pulses but not of a half H pulse.
GH is processed by the noise eliminator and loses nine pulses in the V sync interval.

63. CNTH out **COUNT H output**
CNTH is a H pulse signal that is divided from the HCK(pin 56) input. The divider is reset by the SY1(pin 52) input.
See the description of the M1(pin 14) input.

64. SABS out **TEST output**

CXD1217M (SONY) FLAT PACKAGE

C-MOS SYNC GENERATOR

– TOP VIEW –

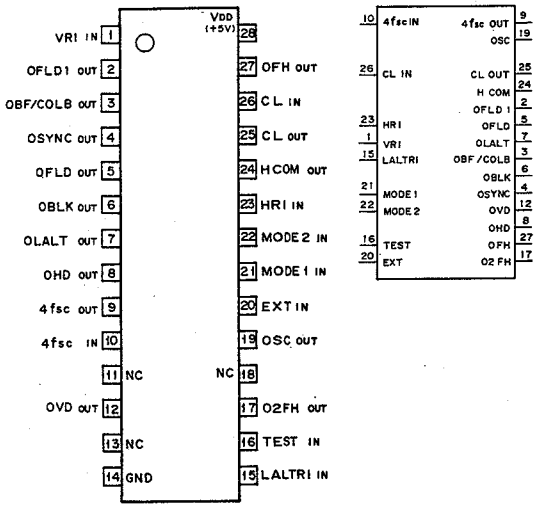

SYSTEM	4fsc	CLOCK
NTSC	910fH	910fH
PAL	1135fH+2fV	908fH
PALM	909fH	910fH
SECAM	—	908fH

INPUT		SYSTEM
MODE1	MODE2	
0	0	NTSC
0	1	SECAM
1	0	PALM
1	1	PAL

0 ; LOW LEVEL
1 ; HIGH LEVEL

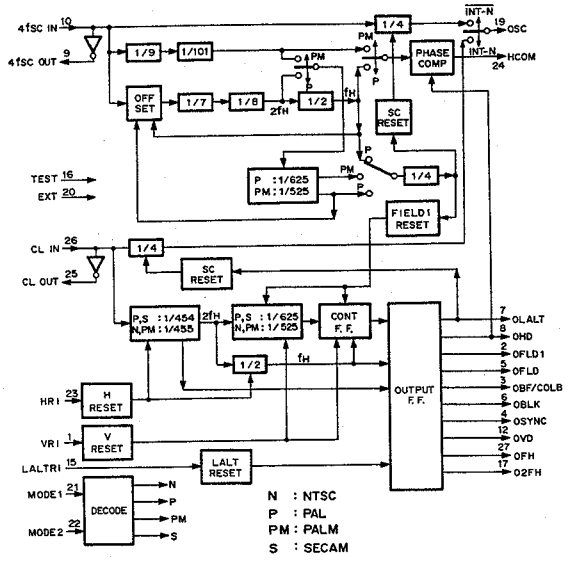

N : NTSC
P : PAL
PM : PALM
S : SECAM

INPUT

4fSC IN	; 4fSC INPUT
CL IN	; CLOCK INPUT
EXT	; SYNC MODE SELECT (L ; INTERNAL/H ; EXTERNAL)
HRI	; H RESET
LALTRI	; LINE CHANGE RESET
MODE 1,2	; SYSTEM SELECT
VRI	; V RESET

OUT PUT

4fSC OUT	; 4fSC OUTPUT
CL OUT	; CLOCK OUTPUT
HCOM	; PHASE COMPARATOR
O2fH	; 2fH OUTPUT
OBF/COLB	; BURST FLAG/COLOR BLANKING
OBLK	; COMPOSITE BLANKING
OFH	; H FREQUENCE
OFLD	; EVEN, ODD
OFLD1	; FIELD1
OHD	; H DRIVE
OLALT	; LINE CHANGE
OSC	; SUBCARRIER
OSYNC	; COMPOSITE SYNC
OVD	; V DRIVE

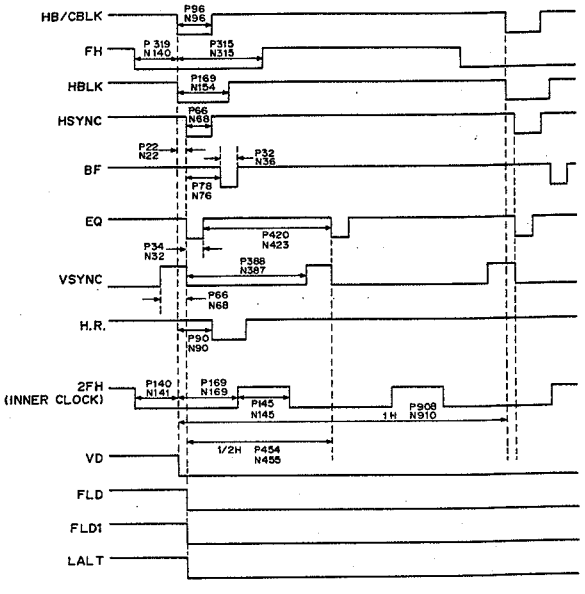

P: PAL, SECAM
N: NTSC, PALM

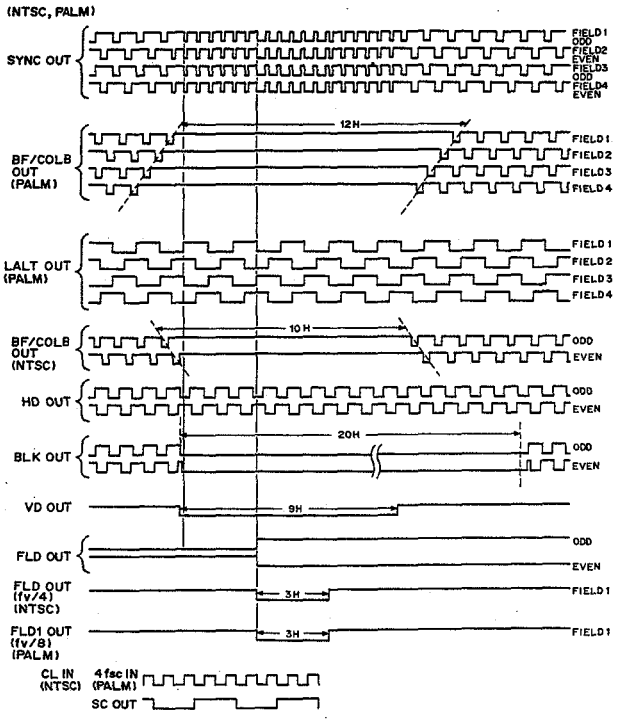

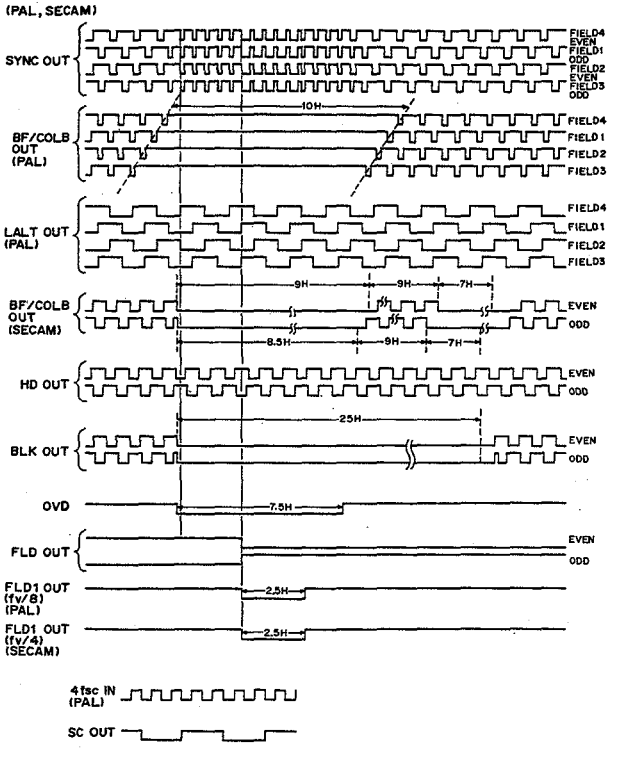

CX20201A-1 (SONY) FLAT PACKAGE

ECL 10-BIT D/A CONVERTER

– TOP VIEW –

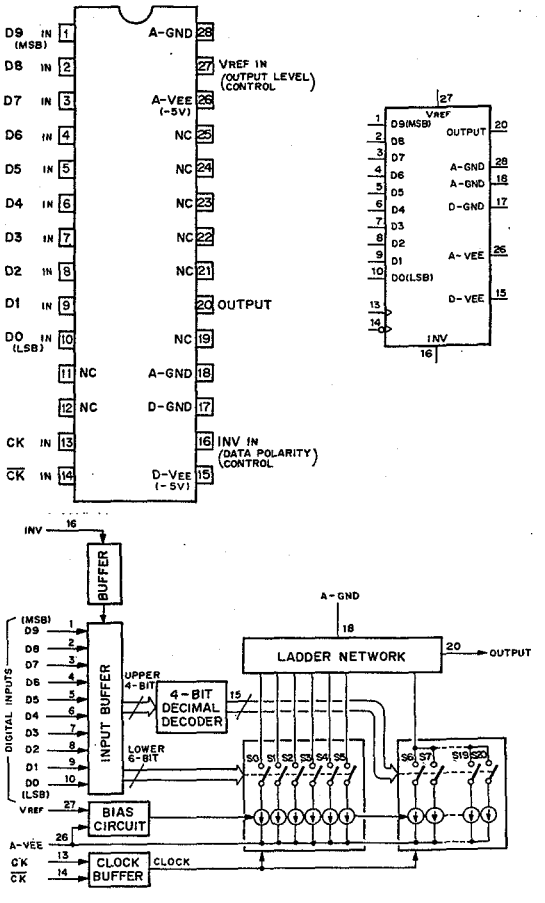

INV SELECTION

DATA INPUTS										OUTPUT	
D9	D8	D7	D6	D5	D4	D3	D2	D1	D0	INV "0"	INV "1"
1	1	1	1	1	1	1	1	1	1	Vo(OS)	Vo(OS)-1.000V
1	1	1	1	1	1	1	1	1	0	Vo(OS)-0.001V	Vo(OS)-0.999V
1	1	1	1	1	1	1	1	0	1	Vo(OS)-0.002V	Vo(OS)-0.998V
⋮	⋮	⋮	⋮	⋮	⋮	⋮	⋮	⋮	⋮	⋮	⋮
1	0	0	0	0	0	0	0	0	0	Vo(OS)-0.500V	Vo(OS)-0.502V
0	1	1	1	1	1	1	1	1	1	Vo(OS)-0.501V	Vo(OS)-0.501V
0	1	1	1	1	1	1	1	1	0	Vo(OS)-0.502V	Vo(OS)-0.500V
⋮	⋮	⋮	⋮	⋮	⋮	⋮	⋮	⋮	⋮	⋮	⋮
0	0	0	0	0	0	0	0	0	0	Vo(OS)-1.000V	Vo(OS)

1 ; ECL HIGH LEVEL (≒-0.89V)
0 ; ECL LOW LEVEL (≒-1.75V)
Vo(OS) ; ZERO OFFSET

CXD8053Q (SONY) FLAT PACKAGE

C-MOS BOX GENERATOR

– TOP VIEW –

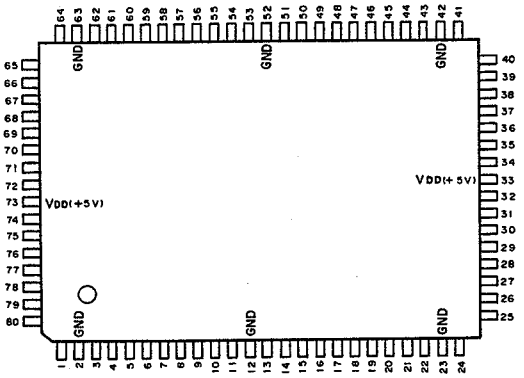

PIN No.	I/O	SIGNAL	PIN No.	I/O	SIGNAL	PIN No.	I/O	SIGNAL	PIN No.	I/O	SIGNAL
1	I	OCS	21	I	MXI6	41	O	MXO3	61	O	MXG8
2	–	GND	22	I	MXI5	42	–	GND	62	O	MXG9
3	O	SOLB	23	–	GND	43	O	MXO4	63	–	GND
4	O	SOLA	24	I	MXI4	44	O	MXO5	64	O	MXGA
5	O	SOL9	25	I	MXI3	45	O	MXO6	65	O	MXGB
6	O	SOL8	26	I	MXI2	46	O	MXO7	66	O	TITL
7	O	SOL7	27	I	MXI1	47	O	MXO8	67	I	CHAR
8	O	SOL6	28	I	MXI0	48	O	MXO9	68	I	TST1
9	O	SOL5	29	I	EXT	49	O	MXOA	69	I	TST0
10	O	SOL4	30	I	EXFR	50	O	MXOB	70	I	MOD1
11	O	SOL3	31	I	HD	51	I	OCG	71	I	MOD0
12	–	GND	32	I	VD	52	–	GND	72	I	RST
13	O	SOL2	33	–	VDD	53	O	MXG0	73	–	VDD
14	O	SOL1	34	I	FLOE	54	O	MXG1	74	I	CKX
15	O	SOL0	35	O	GCTL	55	O	MXG2	75	I	CS
16	I	MXIB	36	O	DCTL	56	O	MXG3	76	I/O	DIO
17	I	MXIA	37	I	OCM	57	O	MXG4	77	I	ADR
18	I	MXI9	38	O	MXO0	58	O	MXG5	78	I	CKD
19	I	MXI8	39	O	MXO1	59	O	MXG6	79	I	TRCK
20	I	MXI7	40	O	MXO2	60	O	MXG7	80	I	CK

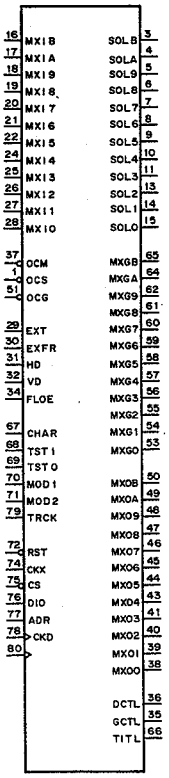

INPUT

ADR ; SERIAL ADDRESS
CHAR ; CHARACTER
CK ; SYSTEM CLOCK (MAX. 20MHz)
CKD ; SERIAL INTERFACE CLOCK
CKX ; SWITCHING TIMING PULSE (HIGH ACTIVE)
CS ; CHIP SELECT
EXFR ; EXTERNAL FRINGE PULSE
EXT ; EXTERNAL FRINGE MODE
FLOE ; FIELD ODD/EVEN
HD ; HORIZONTAL DRIVE PULSE
MIXB~MIX0 ;

MODE 0	NOT USED
MODE 1	VIDEO DATA
MODE 2	MULTIPLEXED SINE DATA
MODE 3	

MOD1, 2 ; MODE SET

MOD1	MOD0	MODE	FUNCTION
0	0	MODE 0	BOX MASK SOLID GENERATOR
	1	MODE 1	SAFE TITLE GENERATOR /INSERTER
1	0	MODE 2	WIPE FRINGE MODULATION OSCILLATOR
	1	MODE 3	WIPE H-V MODULATION OSCILLATOR

0 : LOW LEVEL, 1 : HIGH LEVEL

OCG ; OUTPUT ENABLE OF MXGB – MXG0 (LOW : ENABLE)
OCM ; OUTPUT ENABLE OF MXOB – MXO0 (LOW : ENABLE)
OCS ; OUTPUT ENABLE OF SOLB – SOL0 (LOW : ENABLE)
RST ; SERIAL CONTROL RESET
TRCK ; FRINGE DATA READ PULSE
TST0 ; OUTPUT SWITCH
TST1 ; TEST/NORMAL
VD ; VERTICAL DRIVE PULSE

OUTPUT

DCTL ; MXO OUT CONTROL PULSE
GCTL ; MXG OUT CONTROL PULSE
MXGB – MXG0 ;

MODE 0	COUNTER OUTPUT
MODE 1	COUNTER OUTPUT
MODE 2	FRINGE MOD. GAIN
MODE 3	H-V MOD. MULTIPLEXED GAIN

MXOB – MXO0 ;

MODE 0	SOLID DATA
MODE 1	SOLID DATA
MODE 2	FRINGE MOD. ADDRESS
MODE 3	H-V MOD. MULTIPLEXED ADDRESS

SOLB – SOL0 ;

MODE 0	SOLID DATA
MODE 1	SAFETITLED DATA
MODE 2	FRINGE DATA
MODE 3	H MOD. DATA

TITL ; SAFE TITLE

INPUT/OUTPUT

DIO ; SERIAL DATA

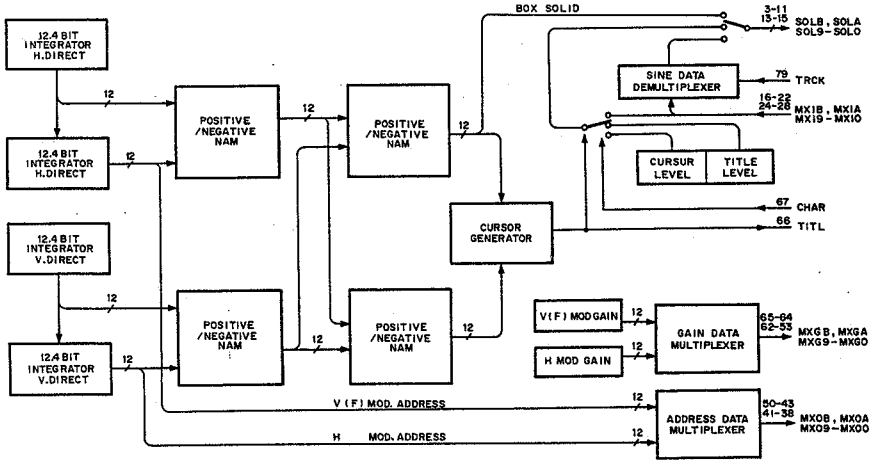

CXD8056Q (SONY) FLAT PACKAGE

C-MOS NAM CROSS POINT

– TOP VIEW –

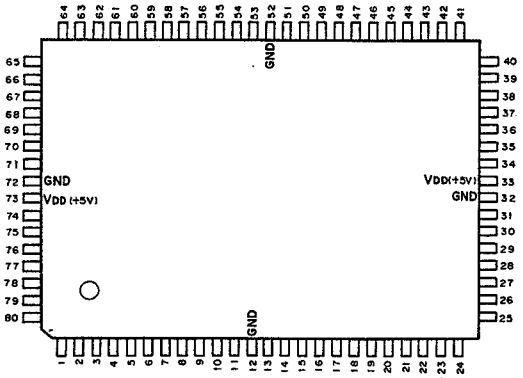

PIN No.	I/O	SIGNAL	PIN No.	I/O	SIGNAL	PIN No.	I/O	SIGNAL	PIN No.	I/O	SIGNAL
1	I	CKX	21	I	DB2	41	I	DD0	61	I	DE9
2	I/O	DIO	22	I	DB3	42	I	DD1	62	I	OE
3	I	ADR	23	I	DB4	43	I	DD2	63	I	CK
4	I	CS	24	I	DB5	44	I	DD3	64	I	TEST
5	I	SC	25	I	DB6	45	I	DD4	65	I	MODE
6	I	SD	26	I	DB7	46	I	DD5	66	O	DO9
7	I	SE	27	I	DB8	47	I	DD6	67	O	DO8
8	I	DA0	28	I	DB9	48	I	DD7	68	O	DO7
9	I	DA1	29	I	DC0	49	I	DD8	69	O	DO6
10	I	DA2	30	I	DC1	50	I	DD9	70	O	DO5
11	I	DA3	31	I	DC2	51	I	DE0	71	O	DO4
12	–	GND	32	–	GND	52	–	GND	72	–	GND
13	I	DA4	33	–	VDD	53	I	DE1	73	–	VDD
14	I	DA5	34	I	DC3	54	I	DE2	74	O	DO3
15	I	DA6	35	I	DC4	55	I	DE3	75	O	DO2
16	I	DA7	36	I	DC5	56	I	DE4	76	O	DO1
17	I	DA8	37	I	DC6	57	I	DE5	77	O	DO0
18	I	DA9	38	I	DC7	58	I	DE6	78	I	RST
19	I	DB0	39	I	DC8	59	I	DE7	79	I	SCPU
20	I	DB1	40	I	DC9	60	I	DE8	80	I	CKD

INPUT

CK : SYSTEM CLOCK
CKD : SERIAL INTERFACE CLOCK
CKX : SWITCHING TIMING PULSE
DA0 – DA9 : 10 BIT DIGITAL IN (CH A)
DB0 – DB9 : 10 BIT DIGITAL IN (CH B)
DC0 – DC9 : 10 BIT DIGITAL IN (CH C)
DD0 – DD9 : 10 BIT DIGITAL IN (CH D)
DE0 – DE9 : 10 BIT DIGITAL IN (CH E)
MODE : MODE SELECT
LOW : 1 INPUT MODE (2CK DELAY MODE)
HIGH : 5 INPUT MODE
RST ; RESET PULSE
SCPU : SELECT CPU
LOW : MANUAL MODE
HIGH : SERIAL INTERFACE MODE
TEST ; TEST MODE (LOW : TEST)

< SERIAL INTERFACE MODE >
ADR ; ADDRESS
CS ; CHIP SELECT
SC ; NOT USED
SD ; NOT USED
SE ; NOT USED

< MANUAL MODE >
ADR ; SELECT CH A
CS ; SELECT CH B
SC ; SELECT CH C
SD ; SELECT CH D
SE ; SELECT CH E

OUTPUT

DO0 – DO9 ; 10 BIT DIGITAL OUT

INPUT/OUTPUT

DIO ; SERIAL DATA

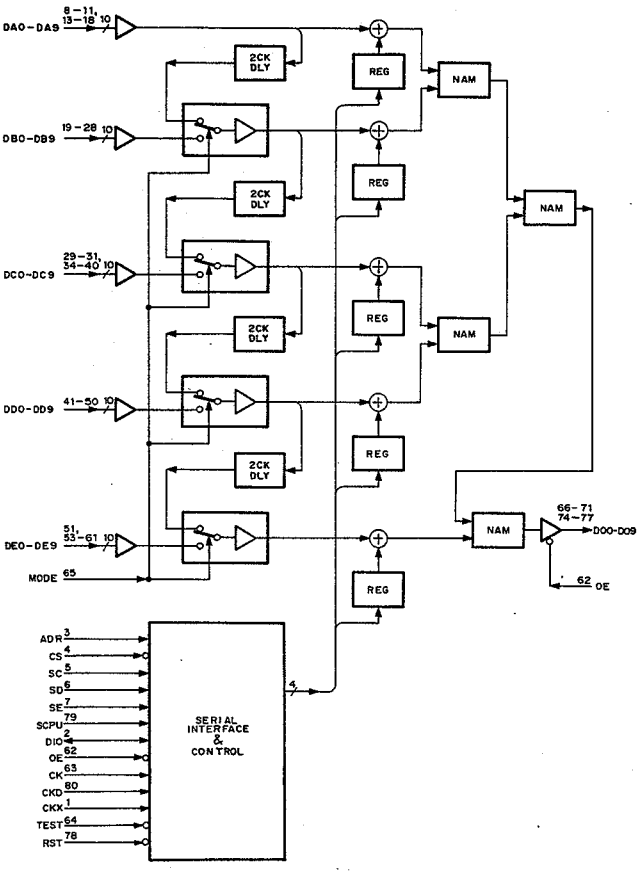

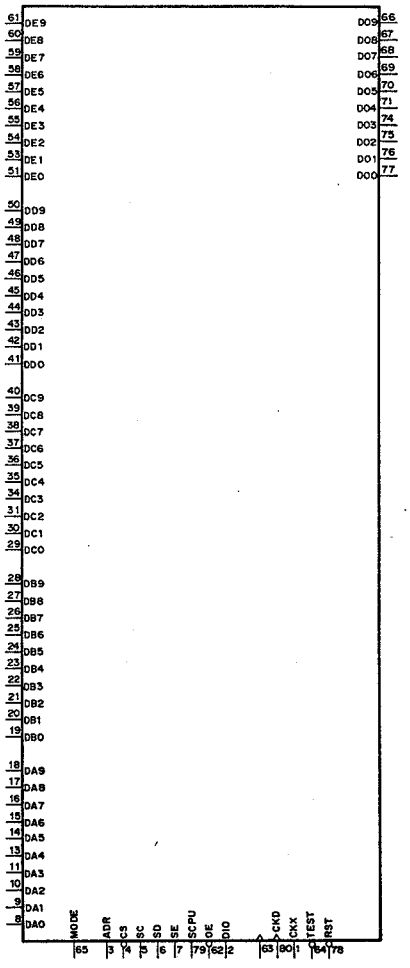

CXD8052Q (SONY) FLAT PACKAGE

C-MOS SERIAL CONTROLLER

– TOP VIEW –

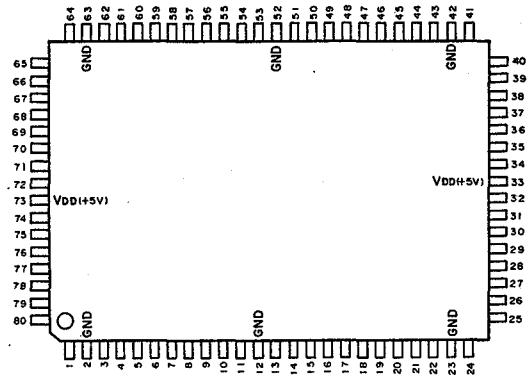

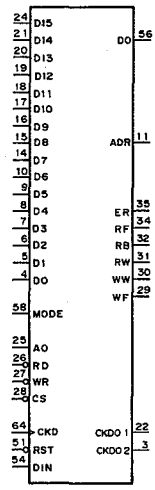

(CPU MODE) (VDD = + 5V)

PIN No.	I/O	SIGNAL	PIN No.	I/O	SIGNAL	PIN No.	I/O	SIGNAL	PIN No.	I/O	SIGNAL
1	–	NC	21	I/O	D14	41	–	NC	61	–	NC
2	–	GND	22	O	CKDO1	42	–	GND	62	–	NC
3	O	CKDO2	23	–	GND	43	–	NC	63	–	GND
4	I/O	D0	24	I/O	D15	44	–	NC	64	I	CKD
5	I/O	D1	25	I/O	A0	45	–	NC	65	–	NC
6	I/O	D2	26	I/O	RD	46	–	NC	66	–	NC
7	I/O	D3	27	I/O	WR	47	–	NC	67	–	NC
8	I/O	D4	28	I/O	CS	48	–	NC	68	–	NC
9	I/O	D5	29	O	WF	49	–	NC	69	–	NC
10	I/O	D6	30	O	WW	50	–	NC	70	–	NC
11	O	ADR	31	O	RW	51	I	RST	71	–	NC
12	–	GND	32	O	RB	52	–	GND	72	–	NC
13	–	NC	33	–	VDD	53	–	NC	73	–	VDD
14	I/O	D7	34	O	RF	54	I	DIN	74	–	NC
15	I/O	D8	35	O	ER	55	–	NC	75	–	NC
16	I/O	D9	36	–	NC	56	O	DO	76	–	NC
17	I/O	D10	37	–	NC	57	–	NC	77	–	NC
18	I/O	D11	38	–	NC	58	I	MODE	78	–	NC
19	I/O	D12	39	–	NC	59	–	NC	79	–	NC
20	I/O	D13	40	–	NC	60	–	NC	80	–	NC

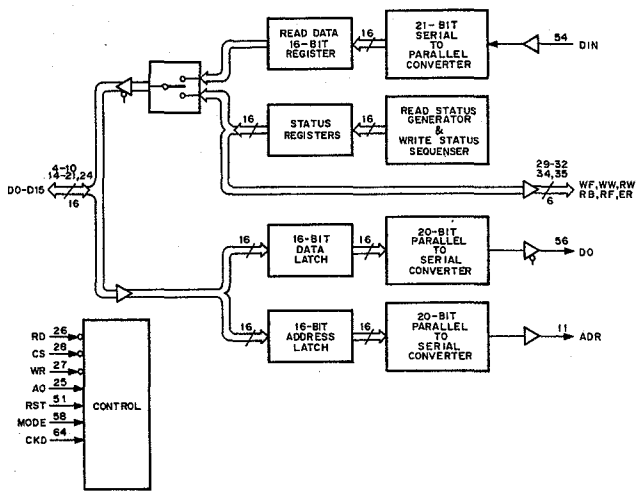

INPUT

AO ; REGISTER SELECT
LOW : DATA REGISTER ACTIVE
HIGH : ADDRESS REGISTER ACTIVE
CKD ; SERIAL INTERFACE CLOCK
CS ; CHIP SELECT (LOW : ACTIVE)
DIN ; SERIAL DATA
MODE ; CPU/VIDEO BOARD MODE SELECT
LOW : CPU MODE
RD ; READ ENABLE (LOW : ACTIVE)
RST ; RESET PULSE
WR ; WRITE ENABLE (LOW : ACTIVE)

OUTPUT

ADR ; SERIAL ADDRESS
CKDO1,
CKDO2 ; SERIAL INTERFACE CLOCK
DO ; SERIAL DATA
ER ; READ ERROR (HIGH : ERROR)
RB ; READ BUSY (HIGH : BUSY)
RF ; READ BUFFER FULL OUT
HIGH : READ REGISTERS ARE FULL
LOW : READ REGISTERS ARE EMPTY
RW ; READ WINDOW
HIGH : READ DATA ARE RECEIVING AT DIN TERMINAL
WF ; WRITE BUFFER FULL OUT
HIGH : WRITE REGISTERS ARE FULL
LOW : WRITE REGISTERS ARE EMPTY
WW ; WRITE WINDOW
HIGH : SERIAL DATA OR ADDRESS ARE SENDING FROM D OUT OR ADR (SERIAL ADDRESS) TERMINALS

(VIDEO BOARD MODE)

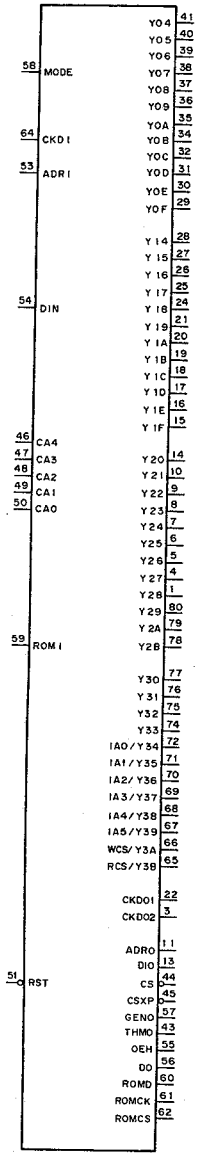

(VDD = +5V)

PIN NO.	I/O	SYMBOL	PIN NO.	I/O	SYMBOL	PIN NO.	I/O	SYMBOL	PIN NO.	I/O	SYMBOL
1	O	Y28	21	I/O	Y19	41	O	Y04	61	O	ROMCK
2	–	GND	22	O	CKDO1	42	–	GND	62	O	ROMCS
3	O	CKDO2	23	–	GND	43	O	THMO	63	–	GND
4	I/O	Y27	24	I/O	Y18	44	O	CS	64	I	CKDI
5	I/O	Y26	25	I/O	Y17	45	O	CSXP	65	O	Y3B/RCS
6	I/O	Y25	26	I/O	Y16	46	I	CA4	66	O	Y3A/WCS
7	I/O	Y24	27	I/O	Y15	47	I	CA3	67	O	Y39/IA5
8	I/O	Y23	28	I/O	Y14	48	I	CA2	68	O	Y38/IA4
9	I/O	Y22	29	O	Y0F	49	I	CA1	69	O	Y37/IA3
10	I/O	Y21	30	O	Y0E	50	I	CA0	70	O	Y36/IA2
11	O	ADRO	31	O	Y0D	51	I	RST	71	O	Y35/IA1
12	–	GND	32	O	Y0C	52	–	GND	72	O	Y34/IA0
13	I/O	DIO	33	–	VDD	53	I	ADRI	73	–	VDD
14	I/O	Y20	34	O	Y0B	54	I	DIN	74	O	Y33
15	I/O	Y1F	35	O	Y0A	55	O	OEH	75	O	Y32
16	I/O	Y1E	36	O	Y09	56	O	DO	76	O	Y31
17	I/O	Y1D	37	O	Y08	57	O	GENO	77	O	Y30
18	I/O	Y1C	38	O	Y07	58	I	MODE	78	O	Y2B
19	I/O	Y1B	39	O	Y06	59	I	ROMI	79	O	Y2A
20	I/O	Y1A	40	O	Y05	60	O	ROMD	80	O	Y29

INPUT

ADRI	; SERIAL ADDRESS
CA0 – CA4	; CARD ADDRESS (5 BIT)
CKDI	; SERIAL INTERFACE CLOCK
DIN	; SERIAL DATA
MODE	; CPU/VIDEO BOARD MODE SELECT H : VIDEO MODE
ROMI	; READ DATA IN FOR EEPROM
RST	; RESET PULSE (L : RESET)

OUTPUT

ADRO	; SERIAL ADDRESS
CKDO1, CKDO2	; SERIAL INTERFACE CLOCK
CSXP	; CHIP SELECT OUT FOR 20 BIT CROSS POINT ICS
DO	; SERIAL DATA
GENO	; UNIVERSAL CONTROL
OEH	; ENABLE OUT FOR DRIVER
ROM CK	; CLOCK OUT FOR EEPROM
ROM CS	; CHIP SELECT OUT FOR EEPROM
ROMD	; WRITE DATA OUT FOR EEPROM
THMO	; THERMISTOR CONTROL
Y04 – Y3B	; IC ADDRESS DECODER

INPUT/OUTPUT

DIO	; SERIAL DATA

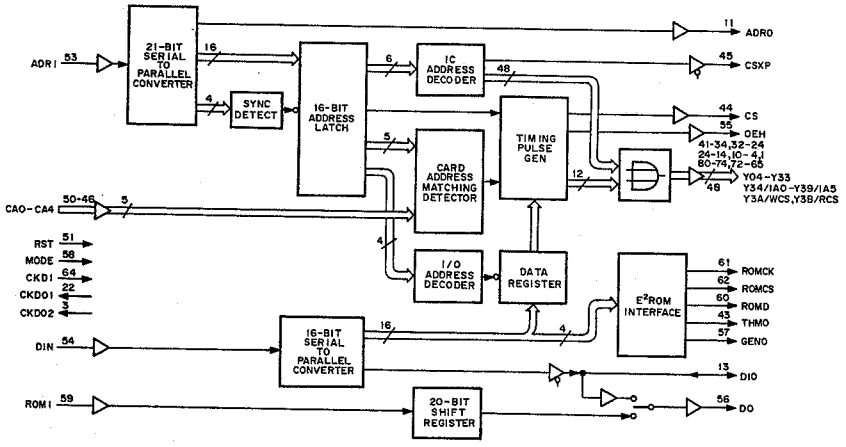

CXD8055 (SONY) FLAT PACKAGE

C-MOS DIGITAL FILTER

– TOP VIEW –

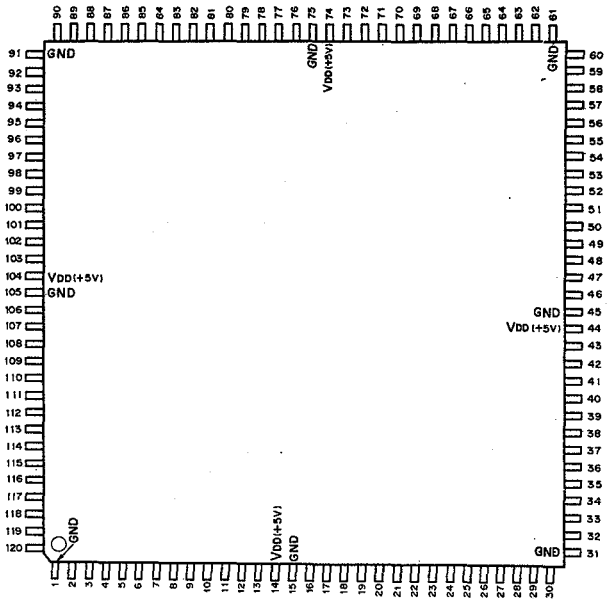

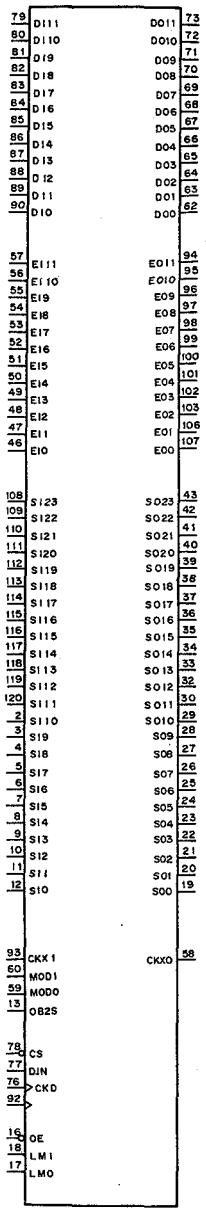

(VDD = + 5V)

PIN NO.	I/O	SYMBOL	PIN NO.	I/O	SYMBOL	PIN NO.	I/O	SYMBOL	PIN NO.	I/O	SYMBOL
1	–	GND	31	–	GND	61	–	GND	91	–	GND
2	I	SI10	32	O	SO12	62	O	DO0	92	I	CK
3	I	SI9	33	O	SO13	63	O	DO1	93	I	CKXI
4	I	SI8	34	O	SO14	64	O	DO2	94	O	EO11
5	I	SI7	35	O	SO15	65	O	DO3	95	O	EO10
6	I	SI6	36	O	SO16	66	O	DO4	96	O	EO9
7	I	SI5	37	O	SO17	67	O	DO5	97	O	EO8
8	I	SI4	38	O	SO18	68	O	DO6	98	O	EO7
9	I	SI3	39	O	SO19	69	O	DO7	99	O	EO6
10	I	SI2	40	O	SO20	70	O	DO8	100	O	EO5
11	I	SI1	41	O	SO21	71	O	DO9	101	O	EO4
12	I	SI0	42	O	SO22	72	O	DO10	102	O	EO3
13	I	OB2S	43	O	SO23	73	O	DO11	103	O	EO2
14	–	VDD	44	–	VDD	74	–	VDD	104	–	VDD
15	–	GND	45	–	GND	75	–	GND	105	–	GND
16	I	OE	46	I	EI0	76	I	CKD	106	O	EO1
17	I	LM0	47	I	EI1	77	I	DIN	107	O	EO0
18	I	LM1	48	I	EI2	78	I	CS	108	I	SI23
19	O	SO0	49	I	EI3	79	I	DI11	109	I	SI22
20	O	SO1	50	I	EI4	80	I	DI10	110	I	SI21
21	O	SO2	51	I	EI5	81	I	DI9	111	I	SI20
22	O	SO3	52	I	EI6	82	I	DI8	112	I	SI19
23	O	SO4	53	I	EI7	83	I	DI7	113	I	SI18
24	O	SO5	54	I	EI8	84	I	DI6	114	I	SI17
25	O	SO6	55	I	EI9	85	I	DI5	115	I	SI16
26	O	SO7	56	I	EI10	86	I	DI4	116	I	SI15
27	O	SO8	57	I	EI11	87	I	DI3	117	I	SI14
28	O	SO9	58	O	CKXO	88	I	DI2	118	I	SI13
29	O	SO10	59	I	MOD0	89	I	DI1	119	I	SI12
30	O	SO11	60	I	MOD1	90	I	DI0	120	I	SI11

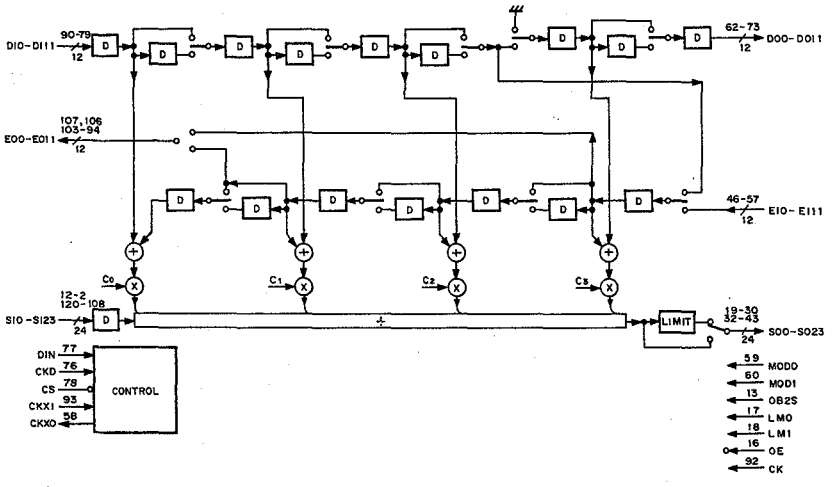

INPUT

CK ; SYSTEM CLOCK
CKD ; SERIAL INTERFACE CLOCK
CKXI ; SWITCHING TIMING PULSE
CS ; CHIP SELECT (LOW : ENABLE)
DI0 – DI11 ; 12 BIT DIGITAL IN
DIN ; SERIAL COEFFICIENT DATA IN (C0 – C3)
EI0 – EI11 ; 12 BIT EXPANSION SHIFT REGISTER IN
LM0, LM1 ; PROGRAMABLE LIMITER SELECT 0, 1

LM1	LM0	SO OUTPUT
0	0	21 BIT
0	1	22 BIT
1	0	23 BIT
1	1	24 BIT

0; LOW LEVEL
1; HIGH LEVEL

MOD0, MOD1 ; MODE SELECT 0, 1

MOD1	MOD0	FUNCTION MODE
1	1	SYMMETRICAL 7 TAP DIGITAL FILTER
0	1	ASYMMETRICAL 4 TAP DIGITAL FILTER
1	0	SYMMETRICAL 13 TAP DIGITAL FILTER
0	0	ASYMMETRICAL 7 TAP DIGITAL FILTER

0; LOW LEVEL
1; HIGH LEVEL

OE ; SO OUTPUT ENABLE IN (LOW : ENABLE)
OB2S ; INPUT/OUTPUT FORMAT SELECT
(AVAILABLE FOR DI, DO, EI, EO, SI, SO)

OB2S	I/O FORMAT
0	STRAIGHT BINARY
1	2'S COMPLEMENT

0 ; LOW LEVEL
1 ; HIGH LEVEL

SI0 – SI23 ; 24 BIT EXPANSION ACCUMULATED

OUTPUT

CKXO ; COEFFCIENT DATA SWITCHING PULSE
(DIFFERENCIAL OUTPUT FOR EXPANSION MODE)

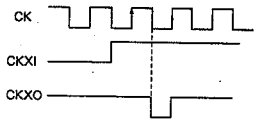

DO0 – DO11 ; 12 BIT DIGITAL OUT

MOD0	DO DELAY AGAINST DI
0	11 CLOCK
1	7 CLOCK

0 ; LOW LEVEL
1 ; HIGH LEVEL

EO0 – EO11 ; 12 BIT EXPANSION SHIFT REGISTER OUT

MOD0	EO DELAY AGAINST EI
0	5 CLOCK
1	1 CLOCK

0 ; LOW LEVEL
1 ; HIGH LEVEL

(MOD1 : LOW MODE)

SO0 – SO23 ; 24 BIT FILTER OUT

MOD1	MOD0	SO DELAY AGAINST DI	AGAINST SI
0	0	10 CLOCK	3 CLOCK
0	1	7 CLOCK	
1	0	11 CLOCK	4 CLOCK
1	1	8 CLOCK	

0; LOW LEVEL
1; HIGH LEVEL

CX23065A (SONY)

N-MOS PHASE COMPARATOR WITH INVERSION AMPLIFIER
– PRINTED SIDE VIEW –

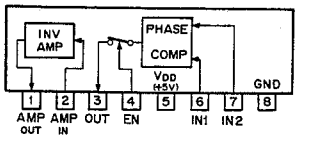

EN	OUT
1	ACTIVE
0	HIGH IMPEDANCE

1 ; HIGH LEVEL
0 ; LOW LEVEL

TIMING CHART

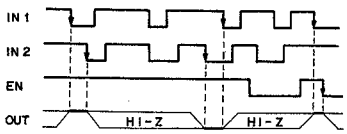

HI-Z ; HI-IMPEDANCE

CXA1389AQ (SONY)

CABLE DRIVER
– TOP VIEW –

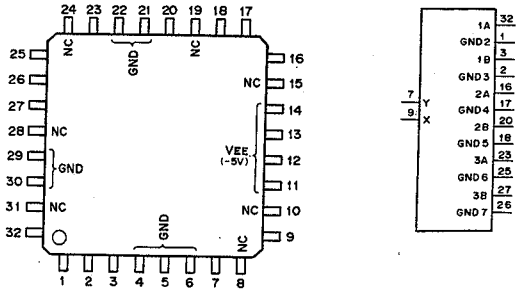

(VEE = – 5V)

PIN NO.	I/O	SIGNAL	PIN NO.	I/O	SIGNAL	PIN NO.	I/O	SIGNAL	PIN NO.	I/O	SIGNAL
1	–	GND2	9	I	X	17	–	GND4	25	–	GND6
2	–	GND3	10	–	NC	18	–	GND5	26	–	GND7
3	O	1B	11	–	VEE	19	–	NC	27	O	3B
4	–	GND	12	–	VEE	20	O	2B	28	–	NC
5	–	GND	13	–	VEE	21	–	GND	29	–	GND
6	–	GND	14	–	VEE	22	–	GND	30	–	GND
7	I	Y	15	–	NC	23	O	3A	31	–	NC
8	–	NC	16	O	2A	24	–	NC	32	O	1A

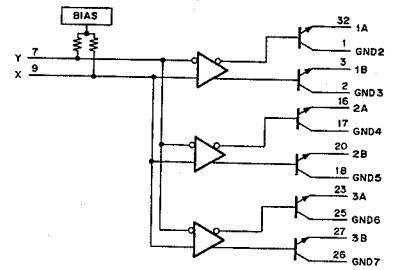

CXD8059 (SONY) FLAT PACKAGE

C-MOS XY ADDRESS GENERATOR

– TOP VIEW –

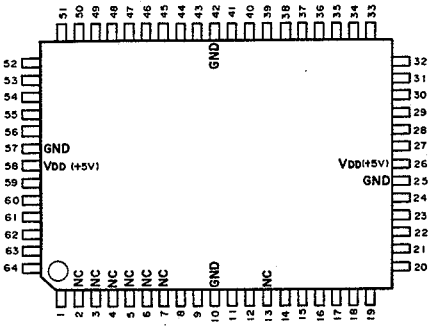

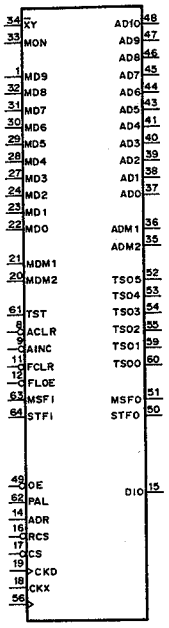

(VDD = + 5V)

PIN No.	I/O	SIGNAL	PIN No.	I/O	SIGNAL	PIN No.	I/O	SIGNAL	PIN No.	I/O	SIGNAL
1	I	MD9	17	I	CS	33	I	MON	49	I	OE
2	–	NC	18	I	CKX	34	I	XY	50	O	STFO
3	–	NC	19	I	CKD	35	O	ADM2	51	O	MSFO
4	–	NC	20	I	MDM2	36	O	ADM1	52	O	TSO5
5	–	NC	21	I	MDM1	37	O	AD0	53	O	TSO4
6	–	NC	22	I	MD0	38	O	AD1	54	O	TSO3
7	–	NC	23	I	MD1	39	O	AD2	55	O	TSO2
8	I	ACLR	24	I	MD2	40	O	AD3	56	I	CK
9	I	AINC	25	–	GND	41	O	AD4	57	–	GND
10	–	GND	26	–	VDD	42	–	GND	58	–	VDD
11	I	FCLR	27	I	MD3	43	O	AD5	59	O	TSO1
12	I	FLOE	28	I	MD4	44	O	AD6	60	O	TSO0
13	–	NC	29	I	MD5	45	O	AD7	61	I	TST
14	I	ADR	30	I	MD6	46	O	AD8	62	I	PAL
15	I/O	DIO	31	I	MD7	47	O	AD9	63	I	MSFI
16	I	RCS	32	I	MD8	48	O	AD10	64	I	STFI

INPUT

ACLR ; ADDRESS CLEAR TIMING PULSE
X MODE ·····HD INPUT (┐└┘┌)
Y MODE ·····VD INPUT (┘└┐┌)

ADR ; SERIAL ADDRESS

AINC ; ADDRESS INCREMENT TIMING PULSE
X MODE ·····HIGH OR LOW (FIXED)
Y MODE ·····HD INPUT (┐└┘┌)

CK ; SYSTEM CLOCK

CKD ; SERIAL INTERFACE CLOCK

CKX ; SWITCHING TIMING PULSE

CS ; CHIP SELECT (LOW : ACTIVE)

FCLR ; FIELD CLEAR TIMING PULSE (FOR PAL)
X MODE ·····FIELD RESET PULSE
Y MODE ·····HIGH OR LOW (FIXED)

FLOE ; FIELD ODD/EVEN PULSE
HIGH : EVEN FIELD

MD0 – MD9 ; 9.2 BIT DIGITAL MODULATION DATA IN (2'S COMPLEMENT)

MDM1, MDM2 ; 9.2 BIT DIGITAL MODULATION DATA IN (2'S COMPLEMENT)

MON ; MODULATION ON/OFF CONTROL
LOW : MODULATION ON

MSFI ; MULTI-SHIFT FLAG IN (LOW : ACTIVE)
Y MODE IC ·····PULL UP
X MODE IC ·····CONNECT MSFO OUT OF Y MODE IC TO MSFI OF X MODE IC

OE ; OUTPUT ENABLE
(LOW : ENABLE, HIGH : DISABLE)

PAL ; NTSC/PAL SELECT

RCS ; READ CHIP SELECT (LOW : ACTIVE)

STFI ; STREAM FLAG IN (LOW : ACTIVE)
Y MODE IC ·····PULL UP
X MODE IC ·····CONNECT STFO OUT OF Y MODE IC TO STFI OF X MODE IC

XY ; X (HORIZONTAL) /Y (VERTICAL) SELECT
LOW : X (HORIZONTAL) ADDRESS GENERATION MODE
HIGH : Y (VERTICAL) ADDRESS GENERATION MODE

OUTPUT

AD0 – AD10 ; 11.2 BIT ADDRESS OUT

ADM1, ADM2 ; 11.2 BIT ADDRESS OUT

MSFO ; MULTI-SHIFT FLAG OUT (LOW : ACTIVE)

TSTO ; TEST

STFO ; STREAM FLAG OUT (LOW : ACTIVE)

INPUT/OUTPUT

DIO ; SERIAL DATA

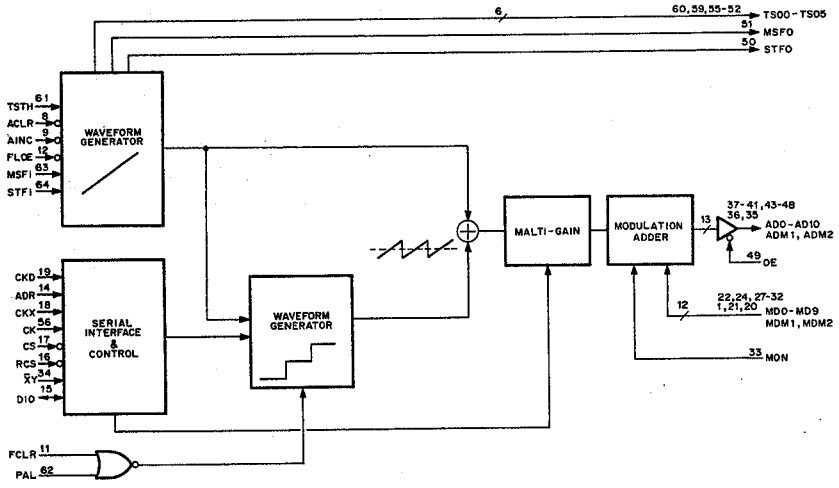

CXD8058Q (SONY) FLAT PACKAGE

C-MOS MEMORY CONTROL

– TOP VIEW –

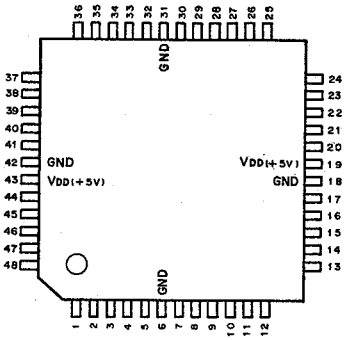

PIN No.	I/O	SIGNAL	PIN No.	I/O	SIGNAL	PIN No.	I/O	SIGNAL	PIN No.	I/O	SIGNAL
1	I/O	D7/PA4	13	I/O	C4/PD4	25	O	B2	37	I	CK1
2	I/O	D6/PA3	14	I/O	C3/PD3	26	O	B1/PLS3	38	I	CK2
3	I/O	D5/PA2	15	I/O	C2/PD2	27	I/O	B0/EN3	39	I	CK3
4	I/O	D4/PA1	16	I/O	C1/PD1	28	I/O	A7/LD3	40	I	CK4
5	I/O	D3/PD8	17	I/O	C0/PD0	29	O	A6/PLS2	41	I	CKX
6	–	GND	18	–	GND	30	I/O	A5/EN2	42	–	GND
7	I/O	D2/PDA	19	–	VDD	31	–	GND	43	–	VDD
8	I/O	D1/PD9	20	I/O	B7/TEST	32	I/O	A4/LD2	44	I	RST
9	I/O	D0/PD8	21	O	B6/PLS4	33	O	A3/PLS1	45	I	CKD
10	I/O	C7/PD7	22	I/O	B5/EN4	34	I/O	A2/EN1	46	I/O	DIO
11	I/O	C6/PD6	23	I/O	B4/LD4	35	I/O	A1/LD1	47	I	ADR
12	I/O	C5/PD5	24	O	B3	36	O	A0	48	I	CS

MODE*	FUNCTION
MODE 0	4 CHANNEL (CH1~CH4) CYCLIC PULSE GENERATORS
MODE 1	2 CHANNEL (CH1 AND CH2) CYCLIC PULSE GENERATORS 1 CHANNEL (CH3) CLOCK FREQUENCY COUNTER
MODE 2	2 CHANNEL (CH1 AND CH2) CYCLIC PULSE GENERATORS 2 CHANNEL (CHC AND CHD) 8 BIT SERIAL TO PARALLEL CONVERTOR
MODE 3	4 CHANNEL (CHA~CHD) 8 BIT SERIAL TO PARALLEL CONVERTOR

* THESE 4 MODE CONTROLS ARE DETERMINED AT MODE REGISTER.

< COMMON TERMINALS FOR ALL FUNCTION >

INPUT
ADR ; SERIAL ADDRESS
CKD ; SERIAL INTERFACE CLOCK
CKX ; SWITCHING TIMING PULSE
CS ; CHIP SELECT (LOW : ACTIVE)
RST ; RESET PULSE (LOW : RESET REGISTERS)

INPUT/OUTPUT
DIO ; SERIAL DATA
(MODE CONTROL DATA, REGISTER DATA IN
CH3 CLOCK FREQUENCY COUNTER DATA OUT)

< TERMINALS FOR CYCLIC PULSE GENERATORS >

INPUT
CK1 – CK4 ; SYSTEM CLOCK FOR 12 BIT COUNTER OF CH1 – CH4
EN1 – EN4 ; ENABLE IN FOR 12 BIT COUNTER OF CH1 – CH4
LD1 – LD4 ; LOAD IN FOR 12 BIT COUNTER OF CH1 – CH4

OUTPUT
PLS1 – PLS4 ; PULSE OUT (CARRY OUTPUT) OF CH1 – CH4

< TERMINALS FOR 8 BIT SERIAL TO PARALLEL CONVERTORS >

OUTPUT
A7 – A0 ; 8 BIT PARALLEL DATA OUT OF CHA
B7 – B0 ; 8 BIT PARALLEL DATA OUT OF CHB
C7 – C0 ; 8 BIT PARALLEL DATA OUT OF CHC
D7 – D0 ; 8 BIT PARALLEL DATA OUT OF CHD

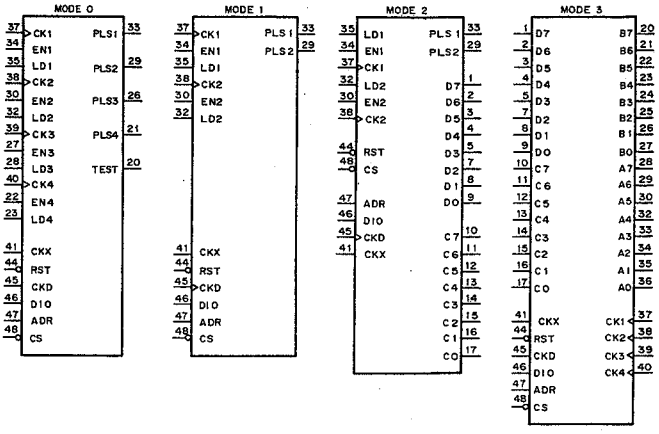

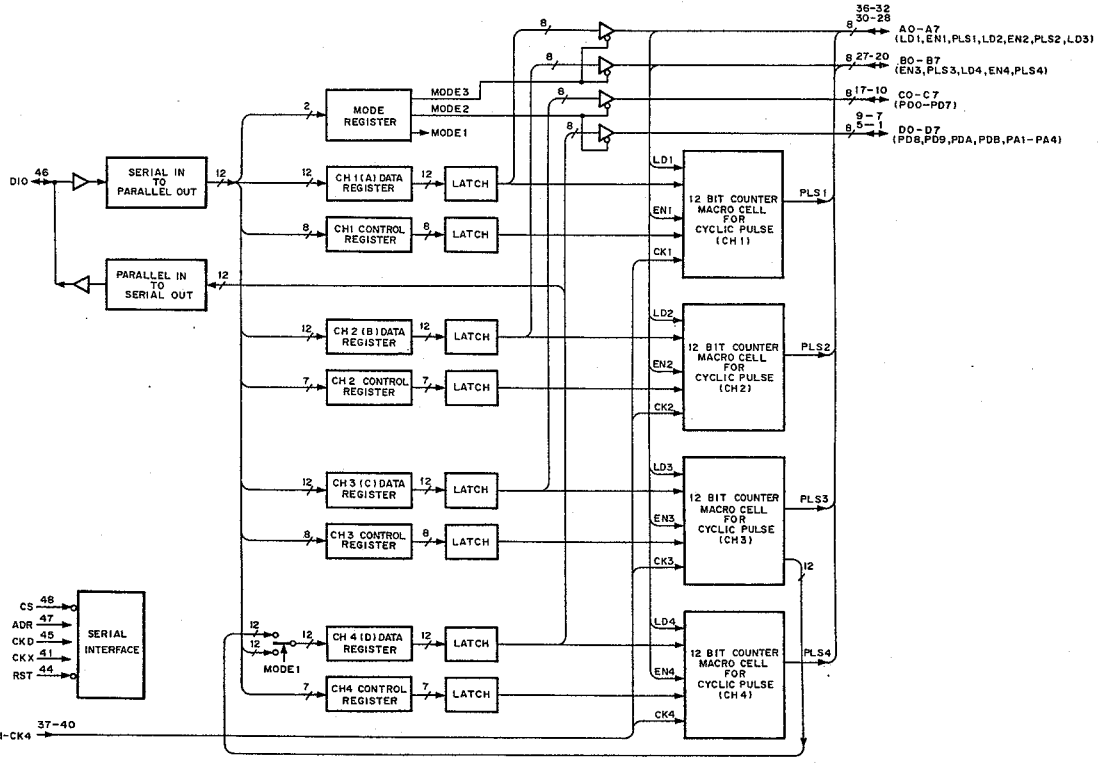

CXD8061 (SONY) FLAT PACKAGE

C-MOS SOLID GENERATOR

– TOP VIEW –

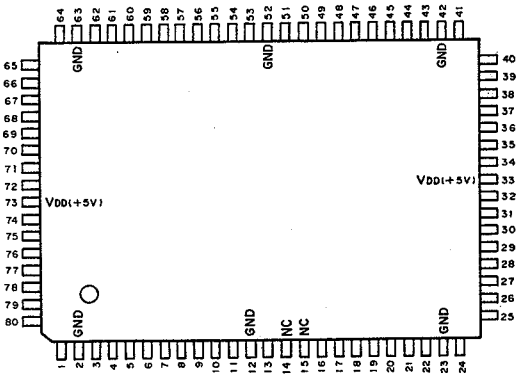

PIN No.	I/O	SIGNAL	PIN No.	I/O	SIGNAL	PIN No.	I/O	SIGNAL	PIN No.	I/O	SIGNAL
1	I	CK	21	I	CS	41	I	SEL0	61	I	A0
2	–	GND	22	I	CKX	42	–	GND	62	I	AEM3
3	O	P11	23	–	GND	43	I	SEL1	63	–	GND
4	O	P10	24	I	CKD	44	I	SEL2	64	I	AEM2
5	O	P9	25	I	B13	45	O	PM11	65	I	AEM1
6	O	P8	26	I	B12	46	O	PM10	66	I	AE0
7	O	P7	27	I	B11	47	O	PM9	67	I	AM1
8	O	P6	28	I	B10	48	O	PM8	68	I	AM2
9	O	P5	29	I	B9	49	O	PM7	69	I	AM3
10	O	P4	30	I	B8	50	O	PM6	70	I	AM4
11	O	P3	31	I	B7	51	O	PM5	71	I	AM5
12	–	GND	32	I	B6	52	–	GND	72	I	AM6
13	O	PM12	33	–	VDD	53	O	PM4	73	–	VDD
14	–	NC	34	I	B5	54	O	PM3	74	I	AM7
15	–	NC	35	I	B4	55	O	PM2	75	I	AM8
16	I	SRIL	36	I	B3	56	O	PM1	76	I	AM9
17	I	RNDL	37	I	B2	57	O	P0	77	I	AM10
18	I	ADR	38	I	B1	58	O	P1	78	I	AM11
19	I/O	DIO	39	I	B0	59	O	P2	79	I	AM12
20	I	RCS	40	I	DCTL	60	I	OE	80	I	AM13

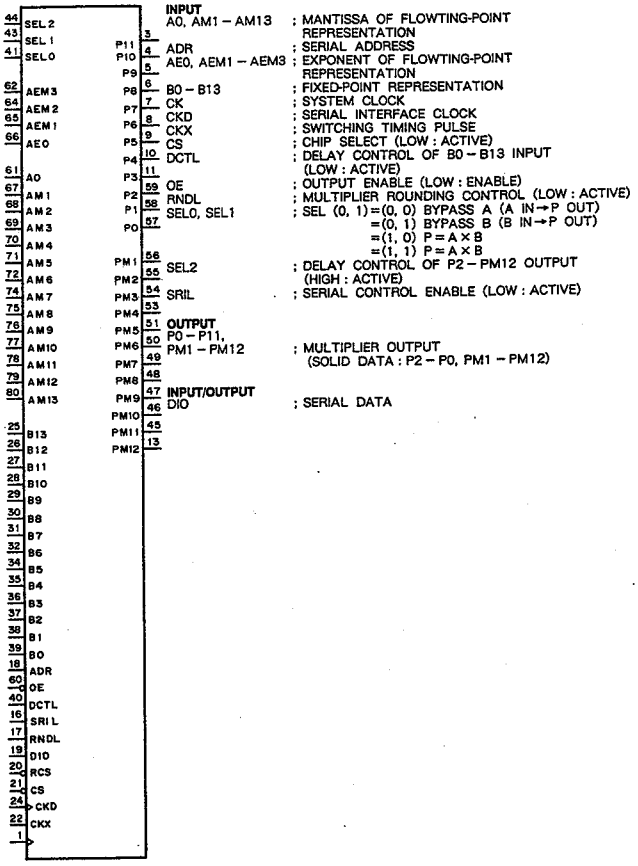

INPUT

A0, AM1 – AM13 ; MANTISSA OF FLOWTING-POINT REPRESENTATION

ADR ; SERIAL ADDRESS

AE0, AEM1 – AEM3 ; EXPONENT OF FLOWTING-POINT REPRESENTATION

B0 – B13 ; FIXED-POINT REPRESENTATION

CK ; SYSTEM CLOCK

CKD ; SERIAL INTERFACE CLOCK

CKX ; SWITCHING TIMING PULSE

CS ; CHIP SELECT (LOW : ACTIVE)

DCTL ; DELAY CONTROL OF B0 – B13 INPUT (LOW : ACTIVE)

OE ; OUTPUT ENABLE (LOW : ENABLE)

RNDL ; MULTIPLIER ROUNDING CONTROL (LOW : ACTIVE)

SEL0, SEL1 ; SEL (0, 1) = (0, 0) BYPASS A (A IN→P OUT)
= (0, 1) BYPASS B (B IN→P OUT)
= (1, 0) P = A × B
= (1, 1) P = A × B

SEL2 ; DELAY CONTROL OF P2 – PM12 OUTPUT (HIGH : ACTIVE)

SRIL ; SERIAL CONTROL ENABLE (LOW : ACTIVE)

OUTPUT

P0 – P11, PM1 – PM12 ; MULTIPLIER OUTPUT (SOLID DATA : P2 – P0, PM1 – PM12)

INPUT/OUTPUT

DIO ; SERIAL DATA

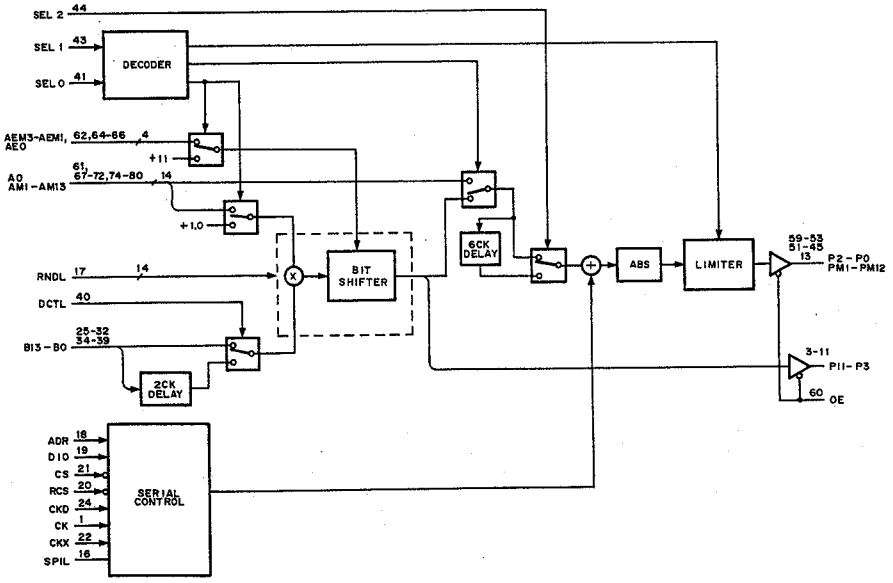

CXD8065 (SONY) FLAT PACKAGE

C-MOS KEY PROCESSOR

– TOP VIEW –

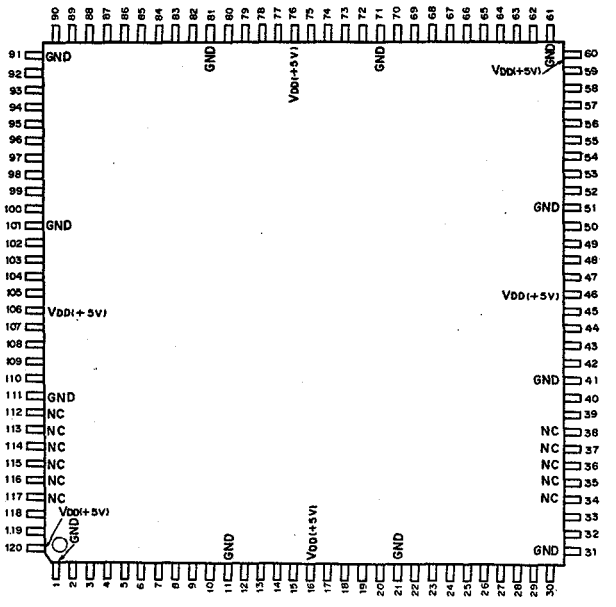

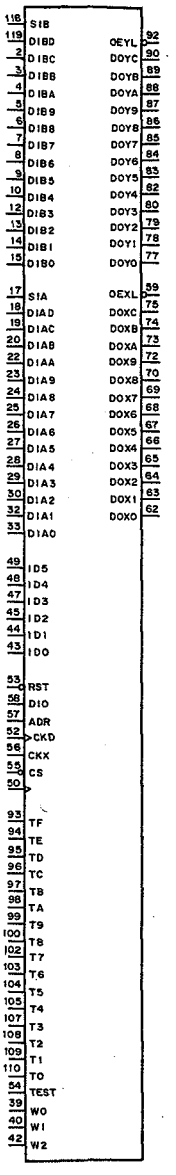

INPUT

ADR	; SERIAL ADDRESS
CK	; SYSTEM CLOCK
CKD	; SERIAL INTERFACE CLOCK
CKX	; SWITCHING TIMING PULSE
CS	; CHIP SELECT (LOW : ACTIVE)
DIAA – DIAD, DIA0 – DIA9	; DATA A IN
DIBA – DIBD, DIB0 – DIB9	; DATA B IN
RST	; RESET
ID0 – ID5	; IC ADDRESS SELECT
SIA, SIB	; SIGN BIT OF "A", "B" IN
OEXL, OEYL	; ENABLE CONTROL OF "X", "Y" OUT (LOW : ENABLE
TA – TF, T0 – T9	; TEST TERMINAL
W0 – W2	; MODE SELECT FOR TEST

OUTPUT

DOXA – DOXC, DOX0 – DOX9	; DATA X OUT
DOYA – DOYC, DOY0 – DOY9	; DATA Y OUT

INPUT/OUTPUT

DIO	; SERIAL DATA

PIN No.	I/O	SIGNAL	PIN No.	I/O	SIGNAL	PIN No.	I/O	SIGNAL	PIN No.	I/O	SIGNAL
1	–	GND	31	–	GND	61	–	GND	91	–	GND
2	I	DIBC	32	I	DIA1	62	O	DOX0	92	I	OEYL
3	I	DIBB	33	I	DIA0	63	O	DOX1	93	I	TF
4	I	DIBA	34	–	NC	64	O	DOX2	94	I	TE
5	I	DIB9	35	–	NC	65	O	DOX3	95	I	TD
6	I	DIB8	36	–	NC	66	O	DOX4	96	I	TC
7	I	DIB7	37	–	NC	67	O	DOX5	97	I	TB
8	I	DIB6	38	–	NC	68	O	DOX6	98	I	TA
9	I	DIB5	39	I	WA0	69	O	DOX7	99	I	T9
10	I	DIB4	40	I	WA1	70	O	COX8	100	I	T8
11	–	GND	41	–	GND	71	–	GND	101	–	GND
12	I	DIB3	42	I	WA2	72	O	DOX9	102	I	T7
13	I	DIB2	43	I	ID0	73	O	DOXA	103	I	T6
14	I	DIB1	44	I	ID1	74	O	DOXB	104	I	T5
15	I	DIB0	45	I	ID2	75	O	DOXC	105	I	T4
16	–	VDD	46	–	VDD	76	–	VDD	106	–	VDD
17	I	SIA	47	I	ID3	77	O	DOY0	107	I	T3
18	I	DIAD	48	I	ID4	78	O	DOY1	108	I	T2
19	I	DIAC	49	I	ID5	79	O	DOY2	109	I	T1
20	I	DIAB	50	I	CK	80	O	DOY3	110	I	T0
21	–	GND	51	–	GND	81	–	GND	111	–	GND
22	I	DIAA	52	I	CKD	82	O	DOY4	112	–	NC
23	I	DIA9	53	I	CLR	83	O	DOY5	113	–	NC
24	I	DIA8	54	I	TEST	84	O	DOY6	114	–	NC
25	I	DIA7	55	I	CS	85	O	DOY7	115	–	NC
26	I	DIA6	56	I	CKX	86	O	DOY8	116	–	NC
27	I	DIA5	57	I	ADR	87	O	DOY9	117	–	NC
28	I	DIA4	58	I/O	DIO	88	O	DOYA	118	I	SIB
29	I	DIA3	59	I	OEXL	89	O	DOYB	119	I	DIBD
30	I	DIA2	60	–	VDD	90	O	DOYC	120	–	VDD

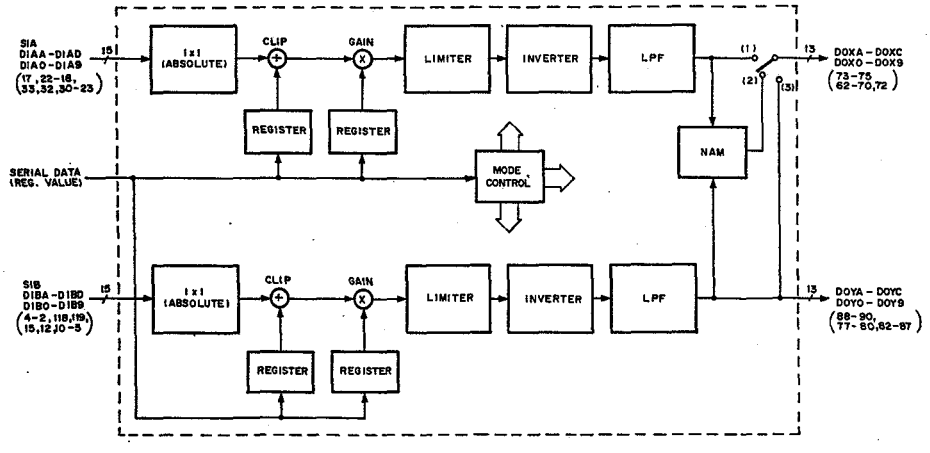

CXD8060Q (SONY) FLAT PACKAGE

C-MOS POLAR COORDINATE

– TOP VIEW –

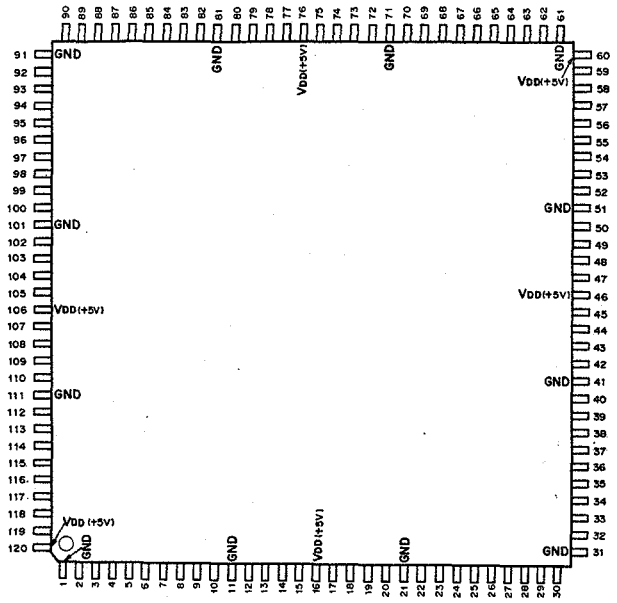

INPUT

ADR	; SERIAL ADDRESS
CK	; SYSTEM CLOCK
CKD	; SERIAL INTERFACE CLOCK
CKX	; SWITCHING TIMING PULSE
CS	; CHIP SELECT
MDL	; M OUTPUT DELAY CONTROL (HIGH : NORMAL, LOW : 2CK DELAY MODE)
OB2S	; OFFSET BINARY/2'S COMPLEMENT SELECT (HIGH : 2'S COMPLEMENT, LOW : OFFSET BINARY)
OEM	; M OUT ENABLE (LOW : ENABLE)
OEP	; P OUT ENABLE (LOW : ENABLE)
RCL0	; REGISTER CLEAR (HIGH : NORMAL, LOW : SET A AND B DATA TO 0)
RCL1	; REGISTER CLEAR (HIGH : NORMAL, LOW : SET C DATA TO 0)
RDM	; ROUNDING M OUT (HIGH)/DISCARD M OUT SELECT (LOW)
RDP0, RDP1	; ROUNDING P OUT (HIGH)/DISCARD P OUT SELECT (LOW)
RST	; RESET PULSE (LOW : SET DIO TERMINAL TO FIXED INPUT MODE)
TST0 – TST3	; FUNCTION MODE SELECT

TST3	TST2	TST1	TST0	FUNCTION MODE	TIO TERMINAL I/O STATUS
1	1	1	0		OUTPUT : $(X-A)^2+(Y-B)^2$
			1	$M=\sqrt{(X-A)^2+(Y-B)^2}$, $P=\tan^{-1}\left(\frac{Y-B}{X-A}\right)+C$ A, B, C : SERIAL DATA	OUTPUT : $\lvert X-A\rvert/\lvert Y-B\rvert$, $\lvert Y-B\rvert/\lvert X-A\rvert$
0	0	0	×	$M=\sqrt{(X-A)^2+(Y-B)^2}$, $P=\tan^{-1}\left(\frac{Y-B}{X-A}\right)+C$ A, B : TIO INPUT, C : SERIAL DATA	INPUT (A AND B DATA)
0	1	1	×	$M=\sqrt{(X-A)^2+(Y-B)^2}$, $P=\tan^{-1}\left(\frac{Y-B}{X-A}\right)+C$ A, B : SERIAL DATA, C : TIO INPUT	INPUT (C DATA)
0	0	1	×	$M=\sqrt{R}$ R : TIO INPUT	INPUT (R)
1	1	0	×	$M=\tan^{-1}D$ D : TIO INPUT	INPUT (D)

×; DON'T CARE

X0 – X9, XA – XC ; 11.2 BIT DIGITAL IN
Y0 – Y9, YA – YC ; 11.2 BIT DIGITAL IN

OUTPUT

ML, M0 – M9, MA – MD ; 11.4 BIT DIGITAL OUT (RADIUS DATA)
PL, P0 – P9, PA – PD ; 15 BIT DIGITAL OUT (ANGLE DATA)

INPUT/OUTPUT

DIO ; SERIAL DATA
TIO0 – TIO9, TIOA – TIOP; TEST

PIN No.	I/O	SIGNAL	PIN No.	I/O	SIGNAL	PIN No.	I/O	SIGNAL	PIN No.	I/O	SIGNAL
1	–	GND	31	–	GND	61	–	GND	91	–	GND
2	I	Y1	32	O	P4	62	I/O	TIO0	92	I	XC
3	I	Y0	33	O	P5	63	I/O	TIO1	93	I	XB
4	I	OB2S	34	O	P6	64	I/O	TIO2	94	I	XA
5	I	CKX	35	O	P7	65	I/O	TIO3	95	I	X9
6	I	RST	36	O	P8	66	I/O	TIO4	96	I	X8
7	I	ADR	37	O	P9	67	I/O	TIO5	97	I	X7
8	I/O	DIO	38	O	PA	68	I/O	TIO6	98	I	X6
9	I	CS	39	O	PB	69	I/O	TIO7	99	I	X5
10	I	CKD	40	O	PC	70	I/O	TIO8	100	I	X4
11	–	GND	41	–	GND	71	–	GND	101	–	GND
12	I	TST0	42	O	PD	72	I/O	TIO9	102	I	X3
13	I	TST1	43	O	ML	73	I/O	TIOA	103	I	X2
14	I	TST2	44	O	M0	74	I/O	TIOB	104	I	X1
15	I	TST3	45	O	M1	75	I/O	TIOC	105	I	X0
16	–	VDD	46	–	VDD	76	–	VDD	106	–	VDD
17	I	RCL0	47	O	M2	77	I/O	TIOD	107	I	CK
18	I	RCL1	48	O	M3	78	I/O	TIOE	108	I	YC
19	I	RDP0	49	O	M4	79	I/O	TIOF	109	I	YB
20	I	RDP1	50	O	M5	80	I/O	TIOG	110	I	YA
21	–	GND	51	–	GND	81	–	GND	111	–	GND
22	I	OEP	52	O	M6	82	I/O	TIOH	112	I	Y9
23	I	RDM	53	O	M7	83	I/O	TIOI	113	I	Y8
24	I	MDL	54	O	M8	84	I/O	TIOJ	114	I	Y7
25	I	OEM	55	O	M9	85	I/O	TIOK	115	I	Y6
26	O	PL	56	O	MA	86	I/O	TIOL	116	I	Y5
27	O	P0	57	O	MB	87	I/O	TIOM	117	I	Y4
28	O	P1	58	O	MC	88	I/O	TION	118	I	Y3
29	O	P2	59	O	MD	89	I/O	TIOO	119	I	Y2
30	O	P3	60	–	VDD	90	I/O	TIOP	120	–	VDD

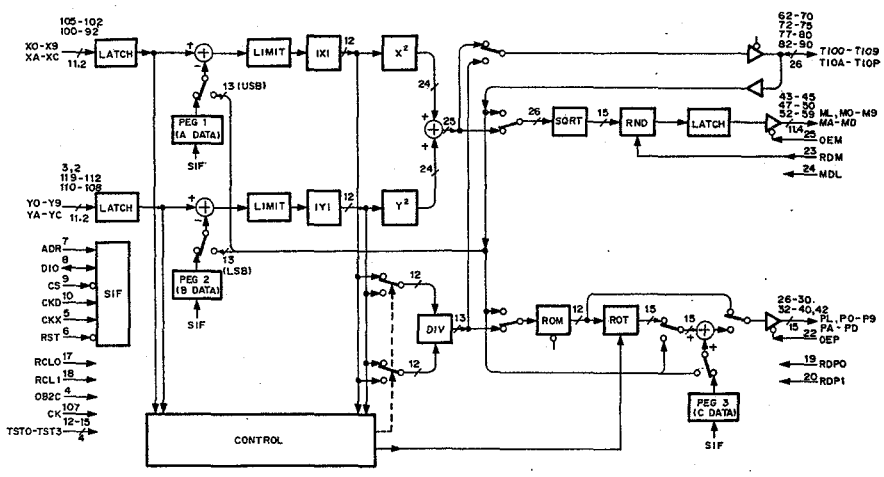

CXD8364Q (SONY) FLAT PACKAGE
C-MOS TBC CONTROL
– TOP VIEW –

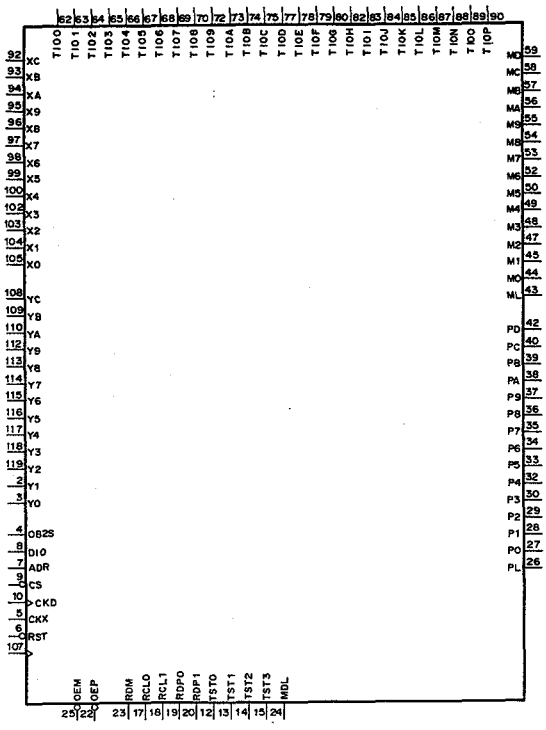

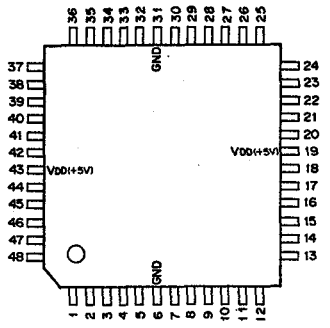

INPUT

ADR	; SERIAL ADDRESS
CKD	; SERIAL INTERFACE CLOCK
CKX	; SWITCHING TIMING PULSE
CS	; CHIP SELECT
D0 – D9	; DATA IN
RCFP	; REF. COLOR FRAME PULSE
RCK	; READ CLOCK
RFLD	; REF. FIELD
RH	; REF. HD
RPT0, RPT1	; READ PORT 0, 1
RST	; RESET
RV	; REF. VD
SMPL	; SAMPLE PULSE
WCK	; WRITE CLOCK

OUTPUT

O0 – O9	; DATA OUT
TRS	; TIMING REF. SIGNAL
WCF0, WCF1	; WRITE COLOR FRAME 0, 1
WFLD	; WRITE FIELD
WH	; WRITE HD
WLOE	; WRITE LINE ODD/EVEN
WPT0, WPT1	; WRITE PORT 0, 1
WV	; WRITE VD

INPUT/OUTPUT

DI0	; SERIAL DATA

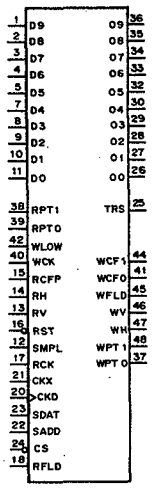

PIN No.	I/O	SIGNAL	PIN No.	I/O	SIGNAL
1	I	D9	25	O	TRS
2	I	D8	26	O	O0
3	I	D7	27	O	O1
4	I	D6	28	O	O2
5	I	D5	29	O	O3
6	–	GND	30	O	O4
7	I	D4	31	–	GND
8	I	D3	32	O	O5
9	I	D2	33	O	O6
10	I	D1	34	O	O7
11	I	D0	35	O	O8
12	I	SMPL	36	O	O9
13	I	RV	37	O	WPT0
14	I	RH	38	I	RPT1
15	I	RCFP	39	I	RPT0
16	I	RST	40	I	WCK
17	I	RCK	41	O	WCF0
18	I	RFLD	42	I	WLOE
19	–	VDD	43	–	VDD
20	I	CKD	44	O	WCF1
21	I	CKX	45	O	WFLD
22	I	SADD	46	O	WV
23	I/O	SDAT	47	O	WH
24	I	CS	48	O	WPT1

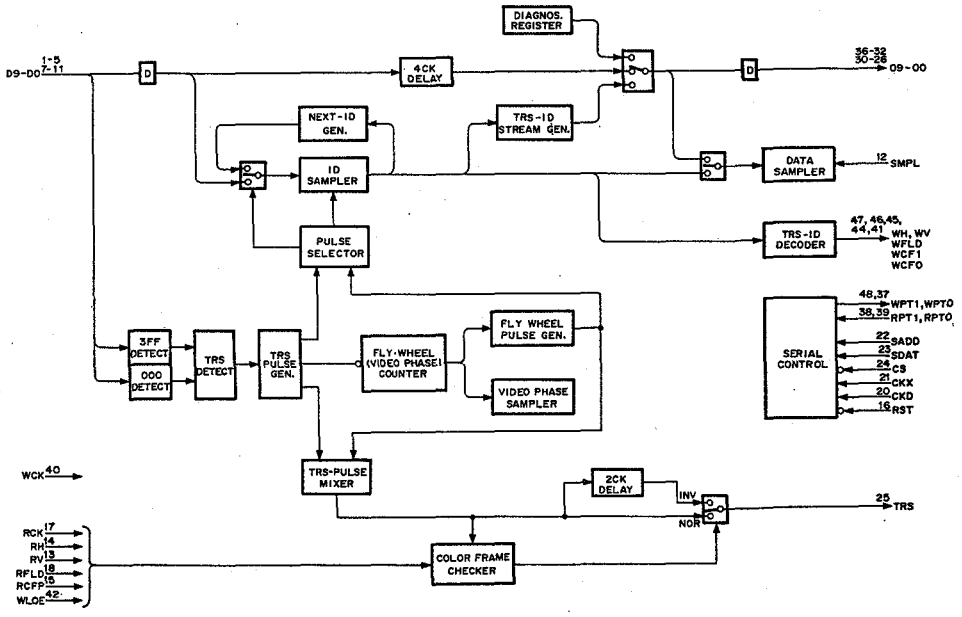

CXD8062Q (SONY) FLAT PACKAGE

C-MOS WIPE MIXER

– TOP VIEW –

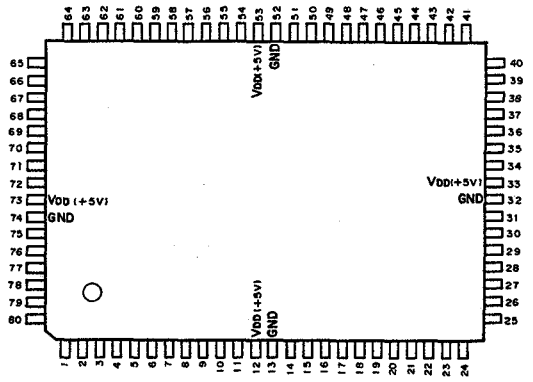

PIN No.	I/O	SIGNAL	PIN No.	I/O	SIGNAL	PIN No.	I/O	SIGNAL	PIN No.	I/O	SIGNAL
1	I	A0	21	I	WCS	41	I	MOD2	61	O	P15
2	I/O	K14	22	I	CKX	42	I	MOD1	62	O	P16
3	I/O	K13	23	I	CKD	43	I	MOD0	63	I	OE
4	I/O	K12	24	I	B14	44	I	P0	64	I	A14
5	I/O	K11	25	I	B13	45	I	P1	65	I	A13
6	I/O	K10	26	I	B12	46	I	P2	66	I	A12
7	I/O	K9	27	I	B11	47	I	P3	67	I	A11
8	I/O	K8	28	I	B10	48	I	P4	68	I	A10
9	I/O	K7	29	I	B9	49	I	P5	69	I	A9
10	I/O	K6	30	I	B8	50	I	P6	70	I	A8
11	I/O	K5	31	I	B7	51	I	P7	71	I	A7
12	–	VDD	32	–	GND	52	–	GND	72	I	CK
13	–	GND	33	–	VDD	53	–	VDD	73	–	VDD
14	I/O	K4	34	I	B6	54	O	P8	74	–	GND
15	I/O	K3	35	I	B5	55	O	P9	75	I	A6
16	I/O	K2	36	I	B4	56	O	P10	76	I	A5
17	I/O	K1	37	I	B3	57	O	P11	77	I	A4
18	I/O	K0	38	I	B2	58	O	P12	78	I	A3
19	O	TSTO	39	I	B1	59	O	P13	79	I	A2
20	I	DIN	40	I	B0	60	O	P14	80	I	A1

MOD2	MOD1	MOD0	SFG2	SFG1	SFG0	FUNCTION	S1	S2	S3	S4	S5	S6	S7	S8	S9	S10	S11	S12	S13	S14
0	0	0	–	–	–	MIXER (REAL TIME K), P = KA + (1 – K) B	3	2	–	0	1	1	0	0	0	0	0	1	1	1
0	0	1	–	–	–	MIXER (SERIAL k), P = kA + (1 – k) B	3	2	–	2	1	1	0	0	0	0	0	1	1	1
0	1	0	–	–	–	K – 1 – K FILTER, P (Z) = (K + Z⁻¹ + KZ⁻²) · Z⁻¹ · A	1	0	–	0	1	1	0	0	0	0	0	1	1	0
0	1	1	–	–	0	ASPECT A, P = k · A, K = B	0	2	–	2	1	0	0	0	0	0	0	0	1	0
					1	ASPECT B, P = A, K = k · B	2	1	–	2	0	0	1	1	0	0	0	0	1	0
1	0	0	–	–	–	FILTER I, P = A + B + K	2	3	–	1	1	1	0	0	0	0	0	1	1	0
1	0	1	–	–	–	FILTER II, P = k · (A + B) + K	2	3	–	2	1	1	0	0	0	0	0	1	1	0
1	1	0	0	0	0	ADD MODE, P = A + B + k (SFG2→ON : A INPUT→ABSOLUTE SFG1→ON : B INPUT→ABSOLUTE)	2	3	–	1	1	2	0	1	0	0	0	0	0	0
			0	1												0	1			
			1	0												1	0			
			1	1												1	1			
			0	0	1	POSI NAM, P = MAX (A, B) (SFGI→ON : A, B INPUTS→ABSOLUTE) NEGA NAM, P = MIN (A, B) (SFGI→ON : A, B INPUTS→ABSOLUTE)	3	1 or 2	–	2	1	1	0	1	1	0	0	0	0	0
			0	1												1	1			
			1	0												0	0			
			1	1												1	1			
1	1	1	–	–	–	4 CLOCK DELAY, P = A, K = B	0	2	–	1	1	0	0	0	0	0	0	0	1	0

0 ; LOW LEVEL
1 ; HIGH LEVEL

NOTE:
SERIAL DATA (DIN)

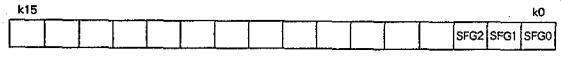

INPUT

A0 – A14	; 15 BIT DIGITAL IN A (2'S COMPLEMENT)
B0 – B14	; 15 BIT DIGITAL IN B (2'S COMPLEMENT)
CK	; SYSTEM CLOCK
CKD	; SERIAL INTERFACE CLOCK
CKX	; SWITCHING TIMING PULSE
DIN	; SERIAL DATA
MOD0 – MOD2	; MODE SELECT 0 – 2
OE	; OUTPUT ENABLE (LOW : ENABLE)
WCS	; WRITE CHIP SELECT (LOW : WRITE)

OUTPUT

P0 – P16	; 17 BIT DIGITAL OUT (2'S COMPLEMENT)
TSTO	; TEST OUT

INPUT/OUTPUT

K0 – K14	; 15 BIT DIGITAL IN/OUT (2'S COMPLEMENT)

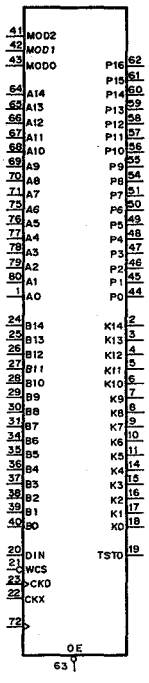

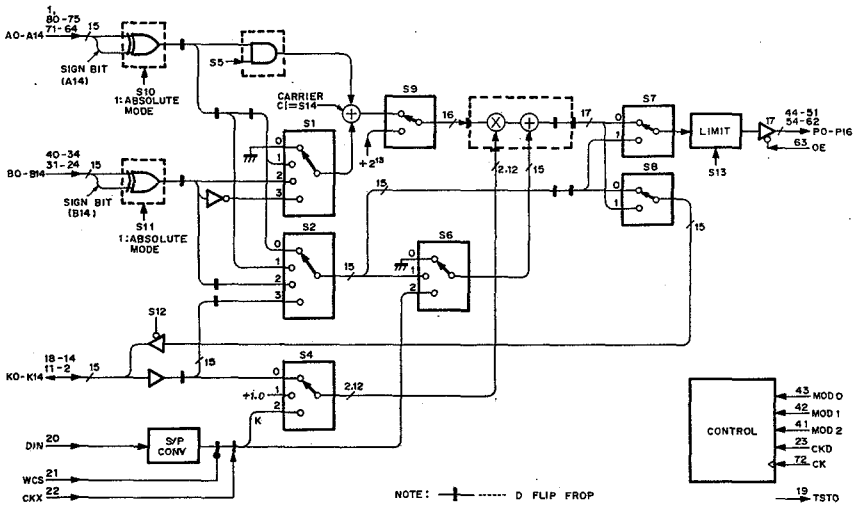

CXD8063Q (SONY) FLAT PACKAGE

C-MOS MATRIX/ENCODER

– TOP VIEW –

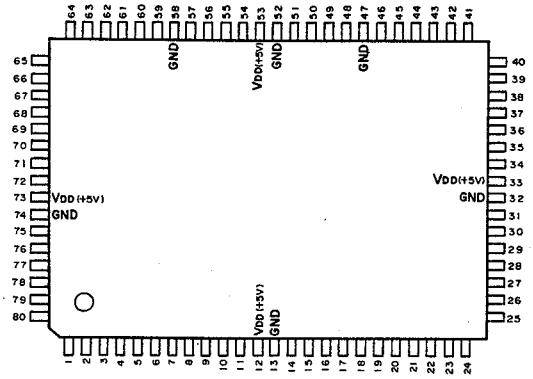

(VDD = +5V)

PIN No.	I/O	SIGNAL	PIN No.	I/O	SIGNAL	PIN No.	I/O	SIGNAL	PIN No.	I/O	SIGNAL
1	I	Q12	21	I	I7	41	I	Y2	61	I	LMT0
2	I	Q11	22	I	I6	42	I	Y1	62	I	LMT1
3	I	Q10	23	I	I5	43	I	P0	63	I	RND
4	I	Q9	24	I	I4	44	I	P1	64	I	SMPL
5	I	Q8	25	I	I3	45	I	P2	65	O	TSTO
6	I	Q7	26	I	I2	46	I	P3	66	I	TST1
7	I	Q6	27	I	I1	47	–	GND	67	I	CKX
8	I	Q5	28	I	I0	48	I	P4	68	I	RST
9	I	Q4	29	I	Y12	49	I	P5	69	I	CS
10	I	Q3	30	I	Y11	50	I	P6	70	I/O	DIO
11	I	Q2	31	I	Y10	51	I	P7	71	I	ADR
12	–	VDD (+5V)	32	–	GND	52	–	GND	72	I	CKD
13	–	GND	33	–	VDD (+5V)	53	–	VDD (+5V)	73	–	VDD (+5V)
14	I	Q1	34	I	Y9	54	I	P8	74	–	GND
15	I	Q0	35	I	Y8	55	I	P9	75	I	CK
16	I	I12	36	I	Y7	56	I	P10	76	I	SC
17	I	I11	37	I	Y6	57	I	P11	77	I	LALT
18	I	I10	38	I	Y5	58	–	GND	78	I	MOD0
19	I	I9	39	I	Y4	59	I	P12	79	I	MOD1
20	I	I8	40	I	Y3	60	I	OE	80	I	MOD2

INPUT

ADR ; SERIAL ADDRESS
CK ; SYSTEM CLOCK
CKD ; SERIAL INTERFACE CLOCK
CKX ; SWITCHING TIMING PULSE
CS ; CHIP SELECT (LOW : ACTIVE)
I0 – I12 ; I IN (2'S COMPLEMENT 12.1 BIT)
LALT ; LINE ALTERNATE PULSE
< FOR D II PAL >
(HIGH : EVEN, LOW : ODD)
< FOR D II NTSC >
(HIGH : CONTINUOUS)

LMT0, LMT1 ; P OUTPUT LIMITER MODE CONTROL

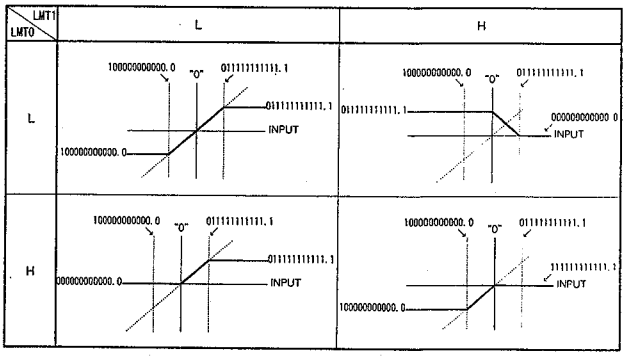

MOD0 – MOD2 ; MODE SELECT

MOD2	MOD1	MOD0	MODE AND FUNCTION
0	0	0	MATRIX, P=(Y+a)×d+(I+b)×e+(Q+C)×f+g
0	0	1	NOT USED
0	1	0	ROTATION I, P=(Y+a)×d+(I+b)×e+(Q+C)×(–f)+g
0	1	1	ROTATION II, P=(Y+a)×d+(I+C)×f+(Q+b)×e+g
1	0	0	NOT USED
1	0	1	NOT USED
1	1	0	ENCODER (NTSC)
1	1	1	ENCODER (PAL)

a, b, c, ...g : REGISTER DATA FROM SERIAL DATA

0 ; LOW LEVEL
1 ; HIGH LEVEL

OE ; P OUTPUT ENABLE CONTROL (LOW : ENABLE)
Q0 – Q12 ; Q IN (2'S COMPLEMENT 12.1 BIT)
RND ; ROUNDING P OUTPUT CONTROL (HIGH : ACTIVE)
RST ; RESET PULSE (LOW : RESET SERIAL I/F)
SC ; SUBCARRIER IN
SMPL ; SAMPLING PULSE FOR P OUTPUT (⨍)
TST1 ; TEST MODE CONTROL (HIGH : TEST MODE)
Y1 – Y12 ; Y IN (2'S COMPLEMENT 12.0 BIT)

OUTPUT

P0 – P12 ; P OUT (2'S COMPLEMENT, 12.1 BIT)
TSTO ; TEST

INPUT/OUTPUT

DIO ; SERIAL DATA

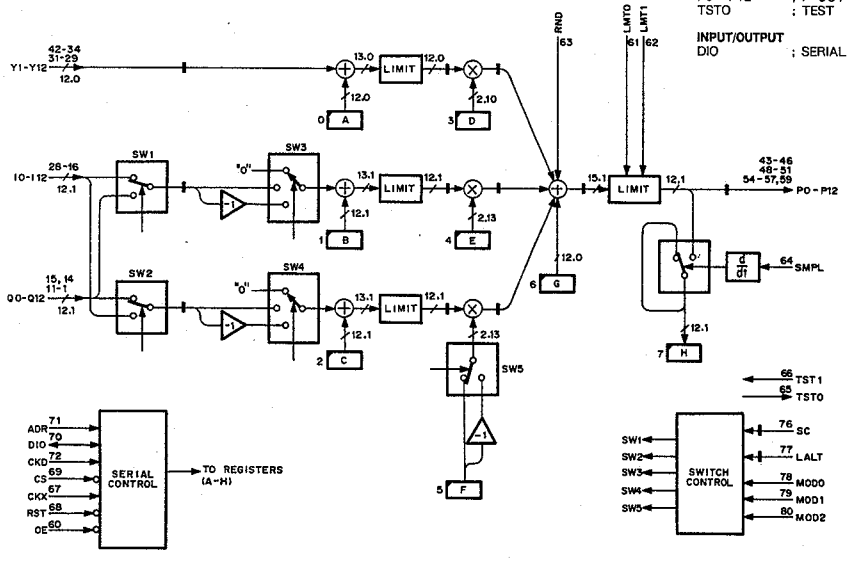

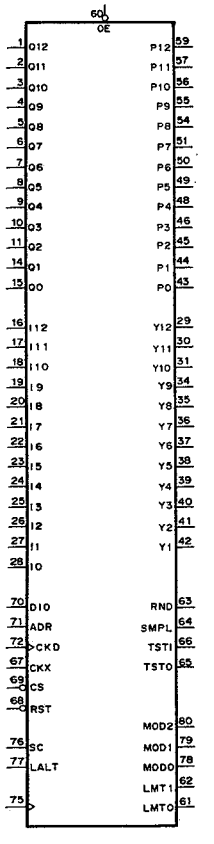

CXD8066 (SONY)

C-MOS KEY CONTROL
– BOTTOM VIEW –

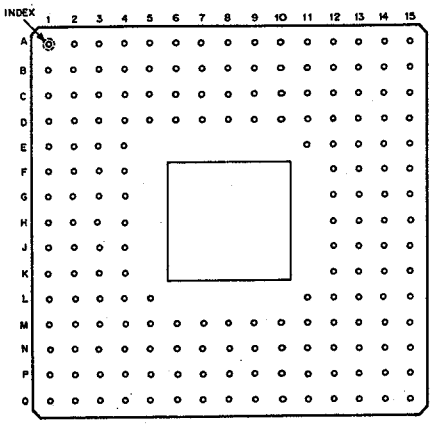

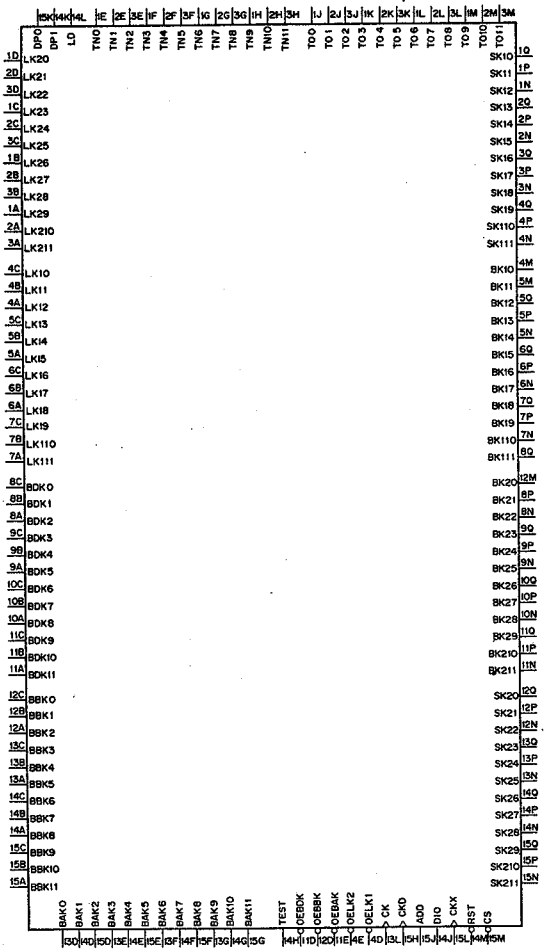

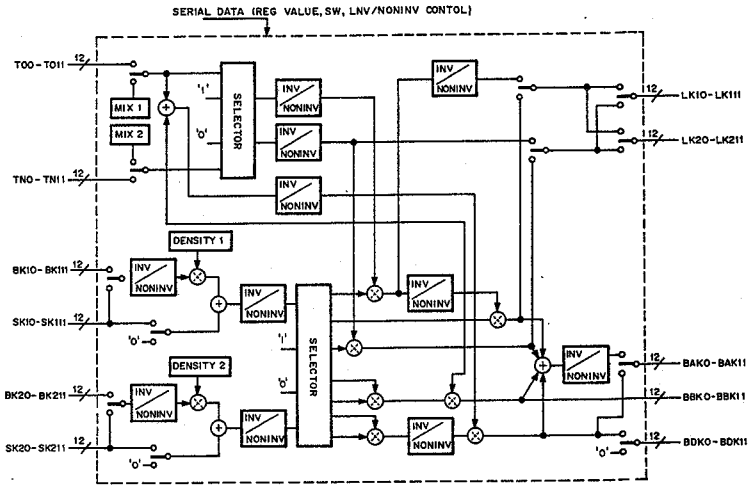

V_{DD} = +5V

PIN No.	I/O	SIGNAL	PIN No.	I/O	SIGNAL	PIN No.	I/O	SIGNAL	PIN No.	I/O	SIGNAL
1A	O	LK29	1D	O	LK20	13H	–	NC	2N	I	SK15
2A	O	LK210	2D	O	LK21	14H	I	TEST	3N	I	SK18
3A	O	LK211	3D	O	LK22	15H	I	CKD	4N	I	SK111
4A	O	LK12	4D	I	OELK1	1J	I	TO0	5N	I	BK14
5A	O	LK15	5D	–	GND	2J	I	TO1	6N	I	BK17
6A	O	LK18	6D	–	GND	3J	I	TO2	7N	I	BK110
7A	O	LK111	7D	–	V_{DD}	4J	–	V_{DD}	8N	I	BK22
8A	O	BDK2	8D	–	GND	12J	–	V_{DD}	9N	I	BK25
9A	O	BDK5	9D	–	V_{DD}	13J	–	NC	10N	I	BK28
10A	O	BDK8	10D	–	GND	14J	I/O	DIO	11N	I	BK211
11A	O	BDK11	11D	I	OEBDK	15J	I	ADR	12N	I	SK22
12A	O	BBK2	12D	I	OEBBK	1K	I	TO3	13N	I	SK25
13A	O	BBK5	13D	O	BAK0	2K	I	TO4	14N	I	SK28
14A	O	BBK8	14D	O	BAK1	3K	I	TO5	15N	I	SK211
15A	O	BBK11	15D	O	BAK2	4K	–	GND	1P	I	SK11
1B	O	LK26	1E	I	TN0	12K	–	GND	2P	I	SK14
2B	O	LK27	2E	I	TN1	13K	–	NC	3P	I	SK17
3B	O	LK28	3E	I	TN2	14K	O	DP1	4P	I	SK110
4B	O	LK11	4E	I	OELK2	15K	O	DP0	5P	I	BK13
5B	O	LK14	11E	I	OEBAK	1L	I	TO6	6P	I	BK16
6B	O	LK17	12E	–	GND	2L	I	TO7	7P	I	BK19
7B	O	LK110	13E	O	BAK3	3L	I	TO8	8P	I	BK21
8B	O	BDK1	14E	O	BAK4	4L	–	GND	9P	I	BK24
9B	O	BDK4	15E	O	BAK5	5L	–	NC	10P	I	BK27
10B	O	BDK7	1F	I	TN3	11L	–	NC	11P	I	BK210
11B	O	BDK10	2F	I	TN4	12L	–	NC	12P	I	SK21
12B	O	BBK1	3F	I	TN5	13L	I	CK	13P	I	SK24
13B	O	BBK4	4F	–	GND	14L	I	LD	14P	I	SK27
14B	O	BBK7	12F	–	GND	15L	I	CKX	15P	I	SK210
15B	O	BBK10	13F	O	BAK6	1M	I	TO9	1Q	I	SK10
1C	O	LK23	14F	O	BAK7	2M	I	TO10	2Q	I	SK13
2C	O	LK24	15F	O	BAK8	3M	I	TO11	3Q	I	SK16
3C	O	LK25	1G	I	TN6	4M	I	BK10	4Q	I	SK19
4C	O	LK10	2G	I	TN7	5M	I	BK11	5Q	I	BK12
5C	O	LK13	3G	I	TN8	6M	–	GND	6Q	I	BK15
6C	O	LK16	4G	–	V_{DD}	7M	–	V_{DD}	7Q	I	BK18
7C	O	LK19	12G	–	V_{DD}	8M	–	GND	8Q	I	BK11
8C	O	BDK0	13G	O	BAK9	9M	–	V_{DD}	9Q	I	BK23
9C	O	BDK3	14G	O	BAK10	10M	–	GND	10Q	I	BK26
10C	O	BDK6	15G	O	BAK11	11M	–	GND	11Q	I	BK29
11C	O	BDK9	1H	I	TN9	12M	I	BK20	12Q	I	SK20
12C	O	BBK0	2H	I	TN10	13M	–	NC	13Q	I	SK23
13C	O	BBK3	3H	I	TN11	14M	I	RST	14Q	I	SK26
14C	O	BBK6	4H	–	GND	15M	I	CS	15Q	I	SK29
15C	O	BBK9	12H	–	GND	1N	I	SK12			

INPUT

ADR	; SERIAL ADDRESS
BK10 – BK111	; DATA INPUT BK1
BK20 – BK211	; DATA INPUT BK2
CK	; SYSTEM CLOCK
CKD	; SERIAL INTERFACE PULSE
CKX	; SWITCHING TIMING PULSE
CS	; CHIP SELECT
LD	; LOAD (* 1)
OEBAK	; ENABLE CONTROL OF BGA OUT (LOW : ENABLE)
OEBBK	; ENABLE CONTROL OF BGB OUT (LOW : ENABLE)
OEBDK	; ENABLE CONTROL OF BD OUT (LOW : ENABLE)
OELK1, OELK0	; ENABLE CONTROL OF LK OUT (LOW : ENABLE)
SK10 – SK111	; DATA INPUT SK1
SK20 – SK211	; DATA INPUT SK2
TEST	; TEST MODE (HIGH : TEST)
TN0 – TN11	; DATA INPUT TN
TO0 – TO11	; DATA INPUT TO

OUTPUT

BAK0 – BAK11	; DATA OUTPUT BAK
BBK0 – BBK11	; DATA OUTPUT BBK
BDK0 – BDK11	; DATA OUTPUT BDK
DP0 – DP1	; TIMING PULSE (* 1)
LK10 – LK111	; DATA OUTPUT LK1
LK20 – LK211	; DATA OUTPUT LK2

INPUT/OUTPUT

DIO	; SERIAL DATA

NOTE : * 1 ····· TIMING-GENERATOR

CXD8338AQ(SONY)

C-MOS VIDEO OUTPUT PROCESSOR
– TOP VIEW –

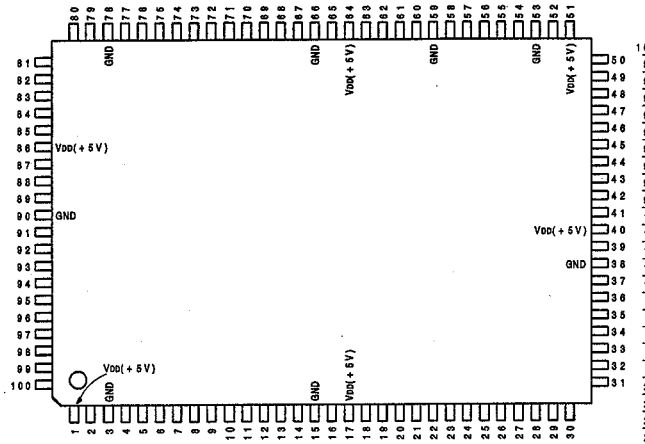

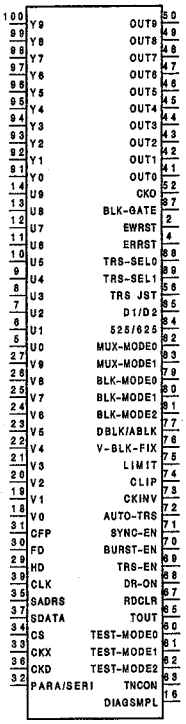

PIN No.	I/O	SIGNAL	PIN No.	I/O	SIGNAL	PIN No.	I/O	SIGNAL	PIN No.	I/O	SIGNAL
1	–	VDD	26	I	V8	51	–	VDD	76	I	V BLK FIX
2	I	EWRST	27	I	V9	52	O	CKO	77	I	DBLK ABLK
3	–	GND	28	–	GND	53	–	GND	78	–	GND
4	I	ERRST	29	I	HD	54	O	DATA PHS	79	I	BLK MODE0
5	I	U0	30	I	FD	55	O	DATA PHS	80	I	BLK MODE1
6	I	U1	31	I	CFP	56	O	TRS JST	81	I	BLK MODE2
7	I	U2	32	I	PARA/SERI	57	O	SEL STAT	82	I	MUX MODE0
8	I	U3	33	I	CKX	58	O	SEL STAT	83	I	MUX MODE1
9	I	U4	34	I	CS	59	–	GND	84	I	525/625
10	I	U5	35	I	SADRS	60	I	TEST MODE0	85	I	D1/D2
11	I	U6	36	I	CKD	61	I	TEST MODE1	86	–	VDD
*12	I	U7	37	I/O	SDATA	62	I	TEST MODE2	87	I	BLK GATE
13	I	U8	38	–	GND	63	I	TNCON	88	I	TRS SEL0
14	I	U9	39	I	CLK	64	–	VDD	89	I	TRS SEL1
15	–	GND	40	–	VDD	65	O	TOUT	90	–	GND
16	I	DIAG SMPL	41	O	OUT0	66	–	GND	91	I	Y0
17	–	VDD	42	O	OUT1	67	I	RDCLR	92	I	Y1
18	I	V0	43	O	OUT2	68	I	DR ON	93	I	Y2
19	I	V1	44	O	OUT3	69	I	TRS EN	94	I	Y3
20	I	V2	45	O	OUT4	70	I	BURST EN	95	I	Y4
21	I	V3	46	O	OUT5	71	I	SYNC EN	96	I	Y5
22	I	V4	47	O	OUT6	72	I	AUTO TRS	97	I	Y6
23	I	V5	48	O	OUT7	73	I	CK INV	98	I	Y7
24	I	V6	49	O	OUT8	74	I	CLIP	99	I	Y8
25	I	V7	50	O	OUT9	75	I	LIMT	100	I	Y9

INPUT

525/625	;
AUTO TRS	;
BLK GATE	;BRANKING SIGNAL
BLK MODE0–2	;
BURST EN	;
CKD	;SERIAL INTERFACE SERIAL DATA
CK INV	;
CKX	;CONTROL REGISTER OPERATION TIMING
CLIP	;
CLK	;SYSTEM CLOCK INPUT
CPF	;SYSTEM CFP INPUT(D2 MODEL)
CS	;CHIP SELECTOR
D1/D2	;CONTROL REGISTER PARALLEL DATA INPUT
DBLK ABLK	;
DIAGSMPL	;
DR ON	;
ERRST	;INPUT READ RESET PULSE
EWRST	;INPUT WRITE RESET PULSE
FD	;SYSTEM FD INPUT(D1 MODEL)
HD	;SYSTEM HD INPUT
LIMIT	;
MUX MODE0,1	;
PARA/SERI	;PARALLEL/SERIAL SWITCHING
RDCLR	;CLEAR PULSE
SADRS	;CONTROL REGISTER SIGNAL ADDRESS
SEL STAT	;
SYNC EN	;
TEST0–2	;TEST POINT
TNCON	;TEST POINT
TRS EN	;
TRS SEL0,1	;MANUAL MODE TRS MIX
V BLK FIX	;
U0–U9,Y0–Y9,V0–V9	;VIDEO SIGNAL

OUTPUT

CKO	;CLOCK OUTPUT
DATA PHS	;OUTPUT VIDEO DATA PHASE
OUT0–9	;VIDEO SIGNAL OUTPUT
TOUT	;TEST POINT
TRS JST	;

INPUT/OUTPUT

SDATA	;CONTROL REGISTER SERIAL DATA

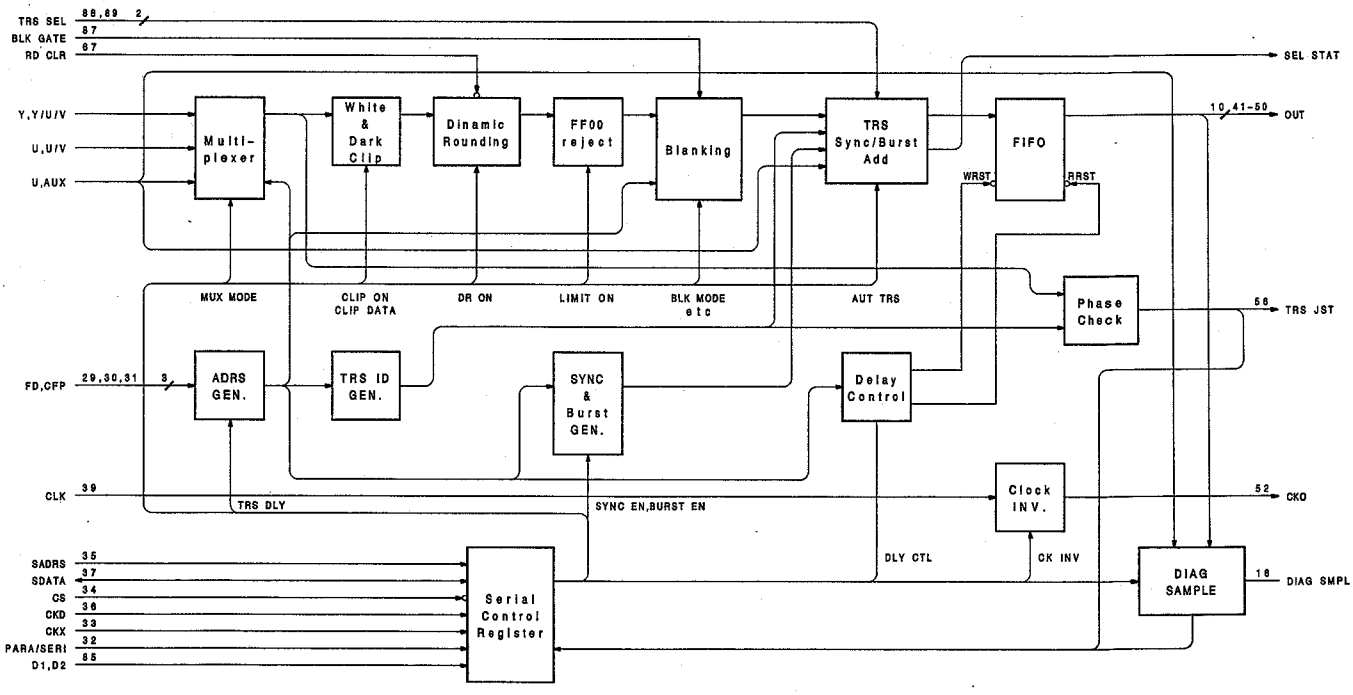

CXD8067 (SONY)

C-MOS MULTIPLIER

– BOTTOM VIEW –

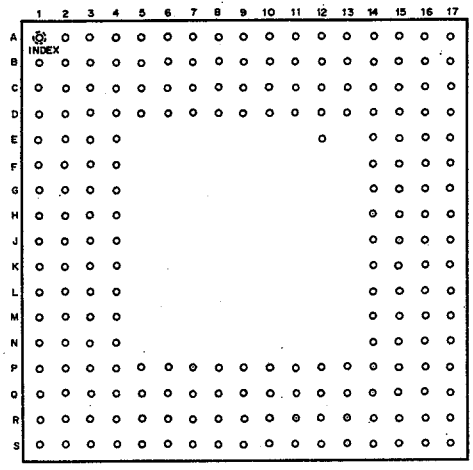

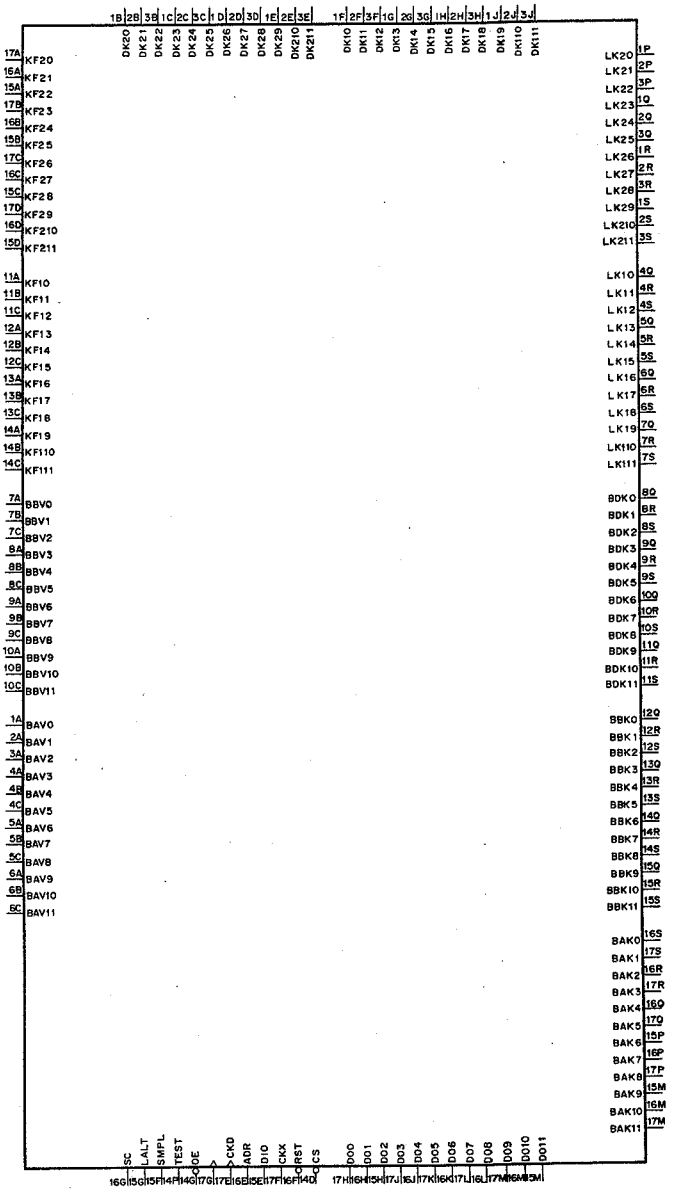

(VDD = + 5V)

PIN No.	I/O	SIGNAL	PIN No.	I/O	SIGNAL	PIN No.	I/O	SIGNAL	PIN No.	I/O	SIGNAL	PIN No.	I/O	SIGNAL
1A	I	BAV0	3J	I	DK111	7A	I	BBV0	12C	I	KF15	15L	I	PA3
1B	I	DK20	3K	I	PD2	7B	I	BBV1	12D	–	GND	15M	O	DO11
1C	I	DK23	3L	I	PD5	7C	I	BBV2	12E	–	NC	15N	I	BAK9
1D	I	DK26	3M	I	PD9	7D	–	NC	12P	–	VDD	15P	I	BAK6
1E	I	DK29	3N	I	PD12	7P	I	PD14	12Q	I	BBK0	15Q	I	BBK9
1F	I	DK10	3P	I	LK22	7Q	I	LK19	12R	I	BBK1	15R	I	BBK10
1G	I	DK13	3Q	I	LK25	7R	I	LK110	12S	I	BBK2	15S	I	BBK11
1H	I	DK16	3R	I	LK28	7S	I	LK111	13A	I	KF16	16A	I	KF21
1J	I	DK19	3S	I	LK211	8A	I	BBV3	13B	I	KF17	16B	I	KF24
1K	I	PD0	4A	I	BAV3	8B	I	BBV4	13C	I	KF18	16C	I	KF27
1L	I	PD3	4B	I	BAV4	8C	I	BBV5	13D	–	VDD	16D	I	KF210
1M	I	PD7	4C	I	BAV5	8D	–	GND	13P	–	GND	16E	I	ADR
1N	I	PD10	4D	–	NC	8P	–	VDD	13Q	I	BBK3	16F	I	RST
1P	I	LK20	4E	–	VDD	8Q	I	BDK0	13R	I	BBK4	16G	I	SC
1Q	I	LK23	4F	–	GND	8R	I	BDK1	13S	I	BBK5	16H	O	DO1
1R	I	LK26	4G	–	GND	8S	I	BDK2	14A	I	KF19	16J	O	DO4
1S	I	LK29	4H	–	VDD	9A	I	BBV6	14B	I	KF110	16K	O	DO6
2A	I	BAV1	4J	–	GND	9B	I	BBV7	14C	I	KF111	16L	O	DO8
2B	I	DK21	4K	–	GND	9C	I	BBV8	14D	I	CS	16M	O	DO10
2C	I	DK24	4L	I	PD6	9D	–	GND	14E	–	GND	16N	I	BAK10
2D	I	DK27	4M	–	VDD	9P	–	GND	14F	–	VDD	16P	I	BAK7
2E	I	DK210	4N	–	GND	9Q	I	BDK3	14G	I	OE	16Q	I	BAK4
2F	I	DK11	4P	I	PD13	9R		BDK4	14H	–	GND	16R	I	BAK2
2G	I	DK14	4Q	I	LK10	9S	I	BDK5	14J	–	GND	16S	I	BAK0
2H	I	DK17	4R	I	LK11	10A	I	BBV9	14K	–	VDD	17A	I	KF20
2J	I	DK110	4S	I	LK12	10B	I	BBV10	14L	–	GND	17B	I	KF23
2K	I	PD1	5A	I	BAV6	10C	I	BBV11	14M	–	GND	17C	I	KF26
2L	I	PD4	5B	I	BAV7	10D	–	VDD	14N	–	VDD	17D	I	KF29
2M	I	PD8	5C	I	BAV8	10P	–	GND	14P	I	TEST	17E	I	CKD
2N	I	PD11	5D	–	GND	10Q	I	BDK6	14Q	I	BBK6	17F	I	CKX
2P	I	LK21	5P	–	VDD	10R	I	BDK7	14R	I	BBK7	17G	I	CK
2Q	I	LK24	5Q	I	LK13	10S	I	BDK8	14S	I	BBK8	17H	O	DO0
2R	I	LK27	5R	I	LK14	11A	I	KF10	15A	I	KF22	17J	O	DO3
2S	I	LK210	5S	I	LK15	11B	I	KF11	15B	I	KF25	17K	O	DO5
3A	I	BAV2	6A	I	BAV9	11C	I	KF12	15C	I	KF28	17L	O	DO7
3B	I	DK22	6B	I	BAV10	11D	–	NC	15D	I	KF211	17M	O	DO9
3C	I	DK25	6C	I	BAV11	11P	I	PD15	15E	I/O	DIO	17N	I	BAK11
3D	I	DK28	6D	–	VDD	11Q	I	BDK9	15F	I	SMPL	17P	I	BAK8
3E	I	DK211	6P	–	GND	11R	I	BDK10	15G	I	LALT	17Q	I	BAK5
3F	I	DK12	6Q	I	LK16	11S	I	BDK11	15H	O	DO2	17R	I	BAK3
3G	I	DK15	6R	I	LK17	12A	I	KF13	15J	I	PA1	17S	I	BAK1
3H	I	DK18	6S	I	LK18	12B	I	KF14	15K	I	PA2			

INPUT

ADR	; SERIAL ADDRESS
BAK0 – BAK11	; 12 BIT DIGITAL BACKGROUND A KEY IN
BAV0 – BAV11	; 12 BIT DIGITAL BACKGROUND A VIDEO IN
BBK0 – BBK11	; 12 BIT DIGITAL BACKGROUND B KEY IN
BBV0 – BBV11	; 12 BIT DIGITAL BACKGROUND B VIDEO IN
BDK0 – BDK11	; 12 BIT DIGITAL WIPE BORDER KEY IN
CK	; SYSTEM CLOCK
CKD	; SERIAL INTERFACE CLOCK
CKX	; SWITCHING TIMING PULSE
CS	; CHIP SELECT (LOW : ACTIVE)
DK10 – DK111	; 12 BIT DIGITAL DELAY KEY 1 IN
DK20 – DK211	; 12 BIT DIGITAL DELAY KEY 2 IN
KF10 – KF111	; 12 BIT DIGITAL KEY 1 FILL VIDEO IN
KF20 – KF211	; 12 BIT DIGITAL KEY 2 FILL VIDEO IN
LALT	; LINE ALTERNATE PULSE <FOR D II PAL> (HIGH : EVEN, LOW : ODD) <FOR D II NTSC> (HIGH : CONTINUOUS)
LK10 – LK111	; 12 BIT DIGITAL LAST KEY 1 IN
LK20 – LK211	; 12 BIT DIGITAL LAST KEY 2 IN
OE	; OUTPUT ENABLE (LOW : ENABLE)
P1 – P3	; PARALLEL ADDRESS IN FOR TEST OF SERIAL COMMUNICATION
PD0 – PD15	; PARALLEL DATA IN FOR TEST OF SERIAL COMMUNICATION
RST	; RESET PULSE (LOW : RESET REGISTER)
SC	; SUBCARRIER PULSE
SMPL	; SAMPLING PULSE
TEST	; TEST MODE (HIGH : TEST, LOW : NORMAL)

OUTPUT

DO0 – DO11	; 12 BIT DIGITAL VIDEO OUT

INPUT/OUTPUT

DIO	; SERIAL DATA

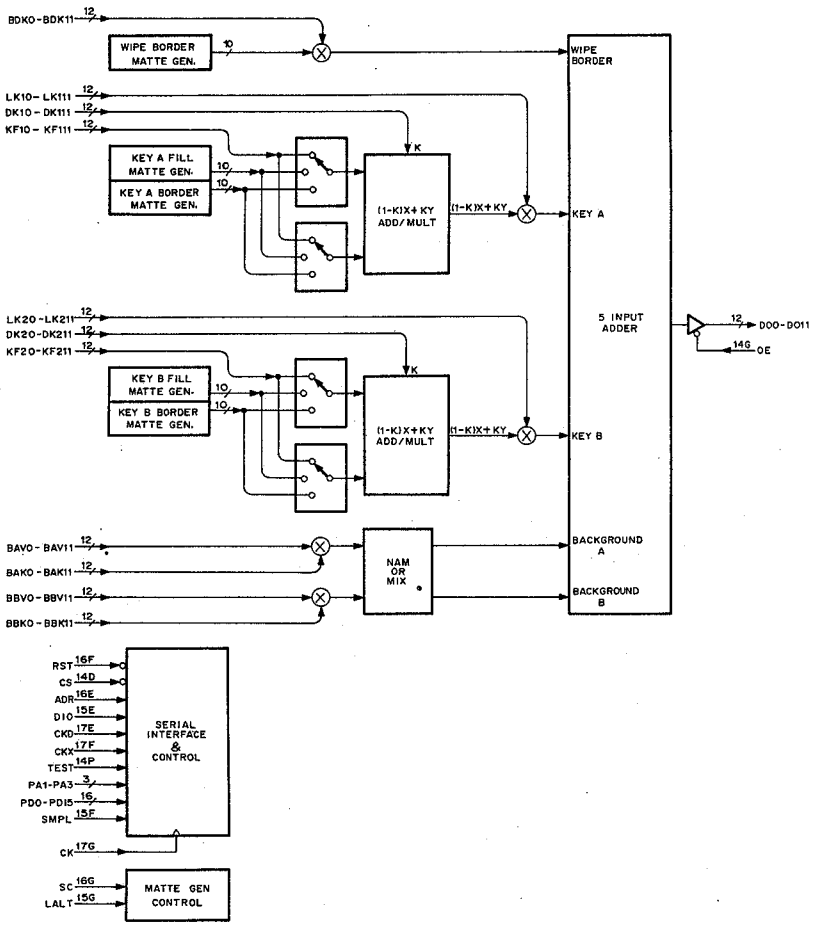

CXD8190Q (SONY) FLAT PACKAGE

C-MOS SUPER MULTIPLEX-DEMULTIPLEXER

– TOP VIEW –

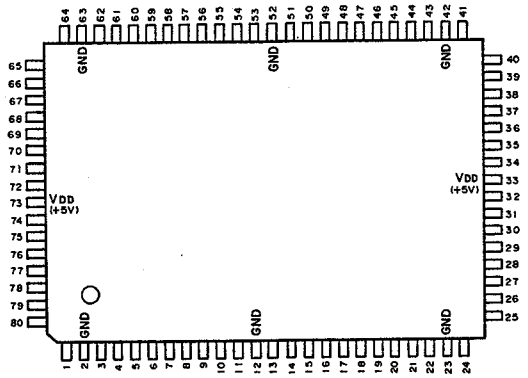

PIN No.	I/O	SIGNAL	PIN No.	I/O	SIGNAL	PIN No.	I/O	SIGNAL	PIN No.	I/O	SIGNAL
1	I	OE	21	I/O	B7	41	I	RST	61	I/O	E7
2	–	GND	22	I/O	B8	42	–	GND	62	I/O	E8
3	I/O	A0	23	–	GND	43	I/O	D0	63	–	GND
4	I/O	A1	24	I/O	B9	44	I/O	D1	64	I/O	E9
5	I/O	A2	25	I/O	C0	45	I/O	D2	65	I/O	F0
6	I/O	A3	26	I/O	C1	46	I/O	D3	66	I/O	F1
7	I/O	A4	27	I/O	C2	47	I/O	D4	67	I/O	F2
8	I/O	A5	28	I/O	C3	48	I/O	D5	68	I/O	F3
9	I/O	A6	29	I	C4	49	I/O	D6	69	I	F4
10	I/O	A7	30	I	C5	50	I/O	D7	70	I	F5
11	I/O	A8	31	I	C6	51	I/O	D8	71	I	F6
12	–	GND	32	I	C7	52	–	GND	72	I	F7
13	I/O	A9	33	–	VDD	53	I/O	D9	73	–	VDD
14	I/O	B0	34	I	C8	54	I/O	E0	74	I	F8
15	I/O	B1	35	I	C9	55	I/O	E1	75	I	F9
16	I/O	B2	36	I/O	DIO/M3	56	I/O	E2	76	I	CK1
17	I/O	B3	37	I	CS/M2	57	I/O	E3	77	I	SMPL/OFS
18	I/O	B4	38	I	ADR/M1	58	I/O	E4	78	I	CK2
19	I/O	B5	39	I	CKD/M0	59	I/O	E5	79	I	SIFM
20	I/O	B6	40	I	CKX/MIV	60	I/O	E6	80	I	CURSOR

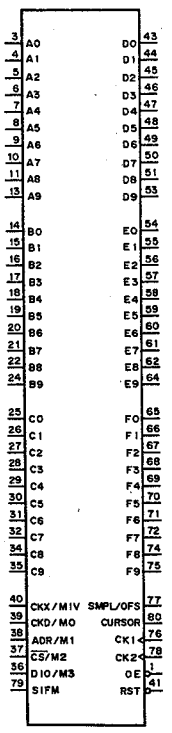

COMMON TERMINALS

A0 – A9 ; CHA 10 BIT DIGITAL INPUT/OUTPUT
B0 – B9 ; CHB 10 BIT DIGITAL INPUT/OUTPUT
C0 – C9 ; CHC 10 BIT DIGITAL INPUT/OUTPUT
CK1 ; SYSTEM CLOCK INPUT
CK2 ; SUB-CLOCK INPUT
CURSOR ; CURSOR INPUT
D0 – D9 ; CHD 10 BIT DIGITAL INPUT/OUTPUT
E0 – E9 ; CHE 10 BIT DIGITAL INPUT/OUTPUT
F0 – F9 ; CHF 10 BIT DIGITAL INPUT/OUTPUT
OE ; OUTPUT ENABLE INPUT (LOW : ENABLE)
RST ; RESET PULSE INPUT (LOW : RESET)
SIFM ; SERIAL INTERFACE MODE (SIF) / MANUAL MODE SELECT INPUT (LOW : SERIAL INTERFACE MODE, HIGH : MANUAL MODE)

TERMINALS OF MANUAL MODE

M0 – M3 ; MODE SELECT INPUT (4 BIT)
MIV ; MSB INVERT CONTROL INPUT (HIGH : INVERT MSB)
OFS ; CURSOR MSB INVERT CONTROL INPUT

TERMINALS OF SIF MODE

ADR ; SERIAL ADDRESS INPUT
CKD ; SERIAL INTERFACE CLOCK INPUT
CKX ; SWITCHING TIMING PULSE INPUT
CS ; CHIP SELECT INPUT (LOW : ACTIVE)
DIO ; SERIAL DATA INPUT/OUTPUT
SMPL ; SAMPLING PULSE INPUT

BLOCK DIAGRAM

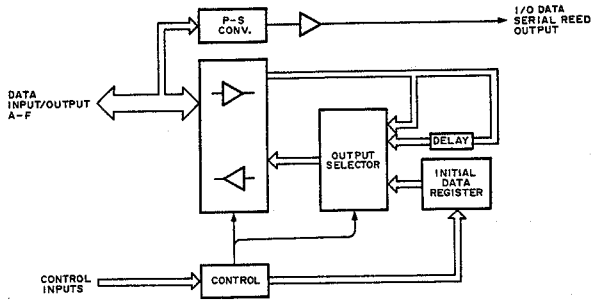

FUNCTION OF MODE 0 – MODE 12

MODE 0 : D1 Y, U, V MULTIPLEXER

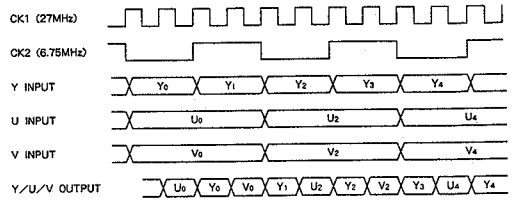

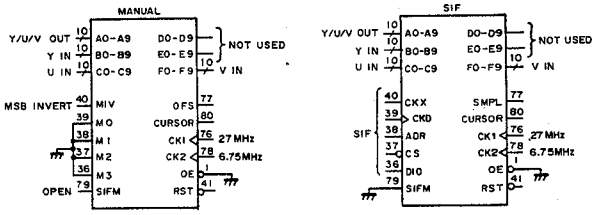

MODE 1 : D1 Y, U/V, MULTIPLEXER (2CH)

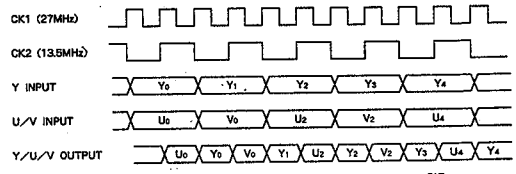

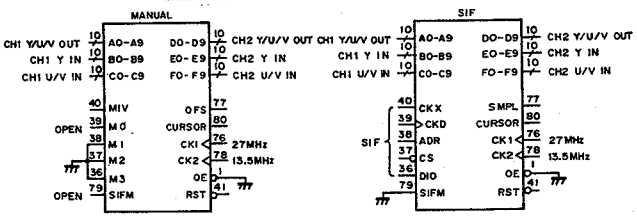

MODE 2 : D1 Y, U/V DEMULTIPLEXER (2CH)

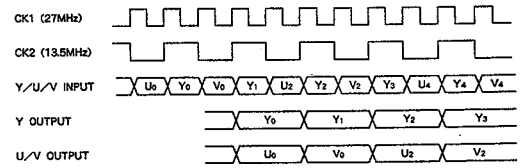

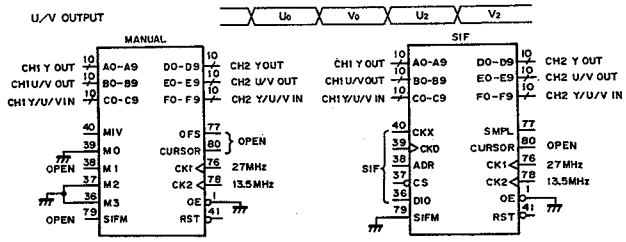

IC IC

MODE 3 : D1 Y, U, V DEMULTIPLEXER (WITH 0 INSERT FUNCTION)

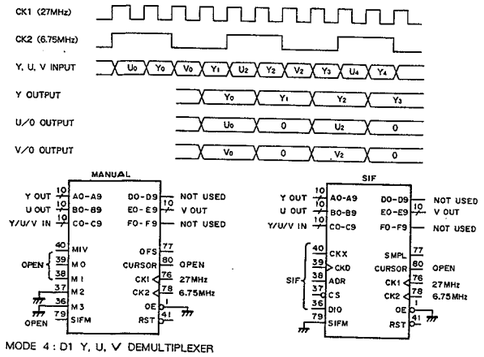

MODE 4 : D1 Y, U, V DEMULTIPLEXER

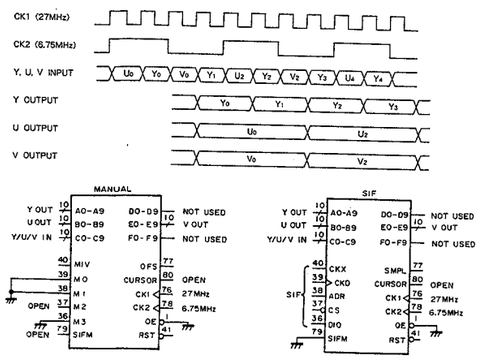

MODE 5 : ABSOLUTE OR INVERT VALUE OPERATION (2CH)

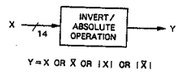

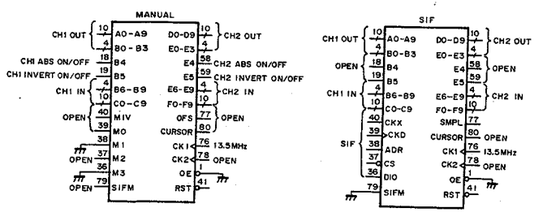

MODE 6 : D2 MATTE GENERATOR (2CH)

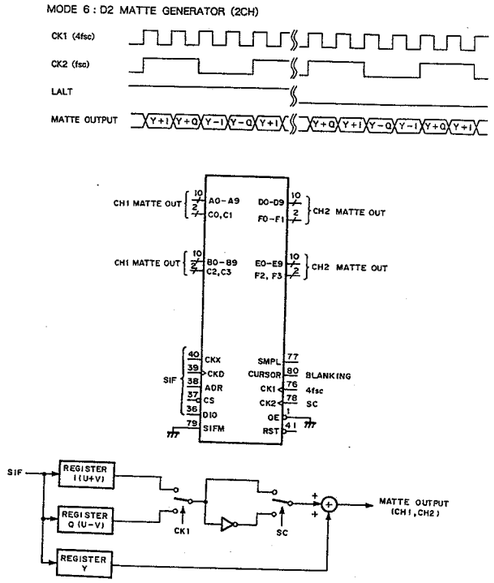

MODE 7 : WIPE/MIX TRANSITION CONTROLLER (3CH OUTPUTS)

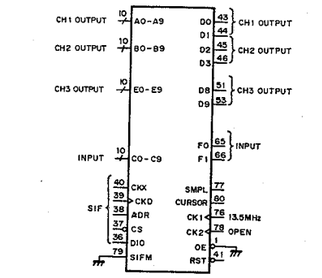

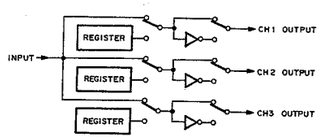

MODE 8 : D1 MATTE GENERATOR (2CH)

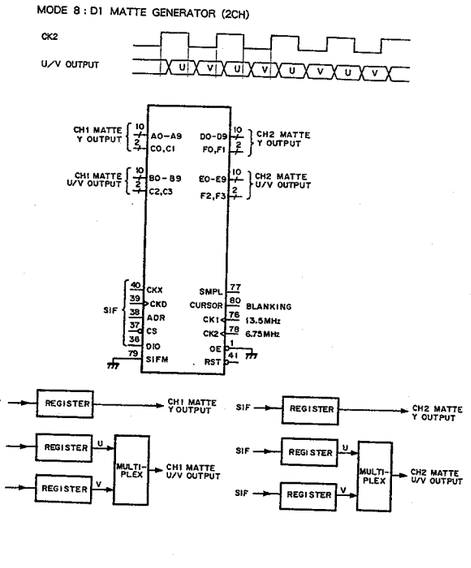

MODE 9 : 1 OF 2 SELECTOR (2CH)

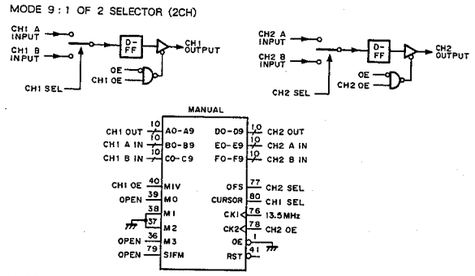

MODE 10 : 1 TO 2 DISTRIBUTER (2CH)

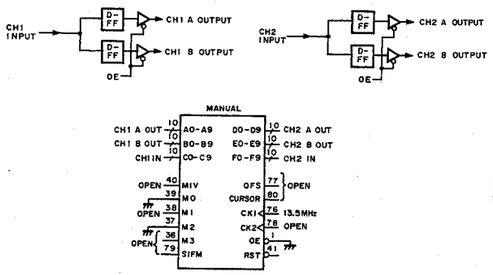

MODE 11 : 1 OF 3 SELECTOR

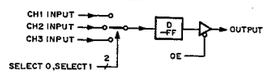

SELECT 1	SELECT 0	OUTPUT
0	0	CH1
0	1	CH2
1	0	CH3
1	1	0 OUT

0 ; LOW LEVEL
1 ; HIGH LEVEL

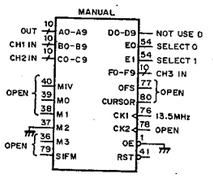

MODE 12 : 1 TO 3 DISTRIBUTER

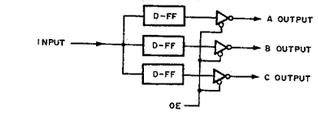

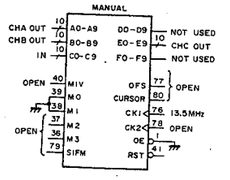

DS1000M-50 (DALLAS SEMICONDUCTOR) (DELAY TIME = 50nS)

C-MOS DELAY LINE
– TOP VIEW –

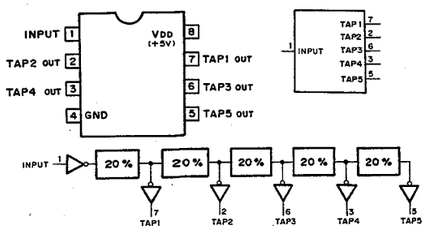

TYPE. NO.	DELAY TIME (ns)				
	TAP1	TAP2	TAP3	TAP4	TAP5
DS1000M-50	10	20	30	40	50
DS1000M-60	12	24	36	48	60
DS1000M-75	15	30	45	60	75
DS1000M-100	20	40	60	80	100
DS1000M-125	25	50	75	100	125
DS1000M-150	30	60	90	120	150
DS1000M-175	35	70	105	140	175
DS1000M-200	40	80	120	160	200
DS1000M-250	50	100	150	200	250
DS1000M-500	100	200	300	400	500

GAL16V8A-15LP (LATTICE)
GAL16V8A-25LP (LATTICE)
GAL16V8B-10LP (LATTICE)

C-MOS ELECTRICALLY ERASABLE PROGRAMMABLE LOGIC DEVICE
– TOP VIEW –

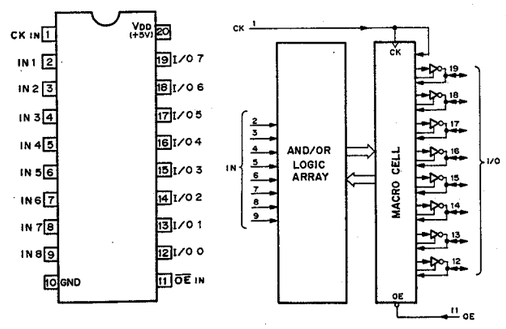

* ABOVE DIAGRAM SHOWS CONDITIONS BEFORE PROGRAMMING.

HM628128LFP-7 (HITACHI) FLAT PACKAGE

C-MOS 131072-WORDx8-BIT HIGH SPEED STATIC RAM
– TOP VIEW –

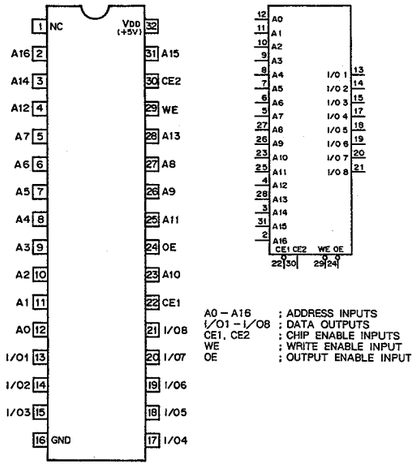

A0 – A16 ; ADDRESS INPUTS
I/O1 – I/O8 ; DATA OUTPUTS
CE1, CE2 ; CHIP ENABLE INPUTS
WE ; WRITE ENABLE INPUT
OE ; OUTPUT ENABLE INPUT

CE1	CE2	OE	WE	MODE	I/O TERMINAL
1	X	X	X	NOT SELECT	HI-Z
X	0	X	X	NOT SELECT	HI-Z
0	1	1	1	OUTPUT DISABLE	HI-Z
0	1	0	1	READ	DATA OUTPUT
0	1	X	0	WRITE	DATA INPUT

0 ; LOW LEVEL
1 ; HIGH LEVEL
X ; DON'T CARE
HI-Z ; HIGH IMPEDANCE

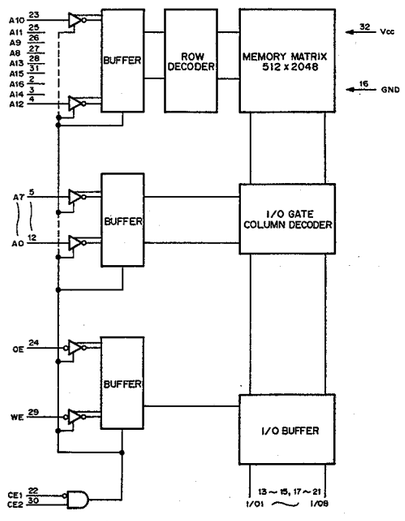

CXD8827Q (SONY)

C-MOS VIDEO MODIFIER
– TOP VIEW –

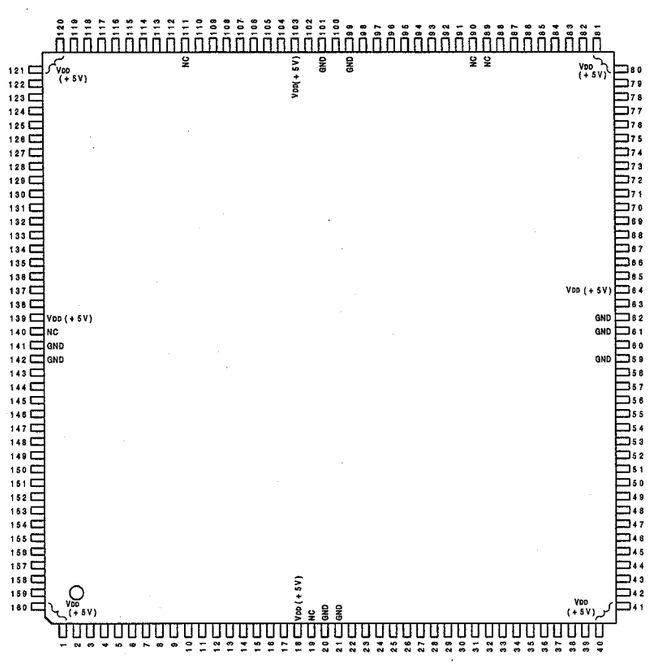

PIN NO.	I/O	SIGNAL	PIN NO.	I/O	SIGNAL	PIN NO.	I/O	SIGNAL	PIN NO.	I/O	SIGNAL
1	–	VDD	41	–	VDD	81	–	VDD	121	–	VDD
2	I	IN11	42	I	IN33	82	I	DT1I	122	I	IN0B
3	I	IN10	43	I	IN32	83	I	DT2I	123	I	IN0A
4	I	IN2B	44	I	IN31	84	I	LD1	124	I	IN09
5	I	IN2A	45	I	IN30	85	I	EN1	125	I	IN08
6	I	IN29	46	I	IN4B	86	I	LD2	126	I	IN07
7	I	IN28	47	I	IN4A	87	I	EN2	127	I	IN06
8	I	IN27	48	I	IN49	88	I	TN IN	128	I	IN05
9	I	IN26	49	I	IN48	89	–	NC	129	I	IN04
10	I	IN25	50	I	IN47	90	–	NC	130	I	IN03
11	I	IN24	51	I	IN46	91	O	DT1CO	131	I	IN02
12	I	IN23	52	I	IN45	92	O	DT1YO	132	I	IN01
13	O	OUT1B	53	O	OUT2B	93	O	DT2O	133	I	IN00
14	O	OUT1A	54	O	OUT2A	94	O	OUT3B	134	O	OUT0B
15	O	OUT19	55	O	OUT29	95	O	OUT3A	135	O	OUT0A
16	O	OUT18	56	O	OUT28	96	O	OUT39	136	O	OUT09
17	O	OUT17	57	O	OUT27	97	O	OUT38	137	O	OUT08
18	–	VDD	58	O	OUT26	98	O	OUT37	138	O	OUT07
19	–	NC	59	–	GND	99	–	GND	139	–	VDD
20	–	GND	60	I	CK	100	I	CKD	140	–	NC
21	–	GND	61	–	GND	101	–	GND	141	–	GND
22	O	OUT16	62	–	GND	102	I/O	SDAT	142	–	GND
23	O	OUT15	63	I	CKS	103	–	VDD	143	O	OUT06
24	O	OUT14	64	–	VDD	104	O	OUT36	144	O	OUT05
25	O	OUT13	65	O	OUT25	105	O	OUT35	145	O	OUT04
26	O	OUT12	66	O	OUT24	106	O	OUT34	146	O	OUT03
27	O	OUT11	67	O	OUT23	107	O	OUT33	147	O	OUT02
28	O	OUT10	68	O	OUT22	108	O	OUT32	148	O	OUT01
29	I	IN22	69	O	OUT21	109	O	OUT31	149	O	OUT00
30	I	IN21	70	O	OUT20	110	O	OUT30	150	I	IN1B
31	I	IN20	71	I	IN44	111	–	NC	151	I	IN1A
32	I	IN3B	72	I	IN43	112	I	SADD	152	I	IN19
33	I	IN3A	73	I	IN42	113	I	CKX	153	I	IN18
34	I	IN39	74	I	IN41	114	I	CS2	154	I	IN17
35	I	IN38	75	I	IN40	115	I	CS1	155	I	IN16
36	I	IN37	76	I	OE0	116	I	CS0	156	I	IN15
37	I	IN36	77	I	OE1	117	I	CTIM	157	I	IN14
38	I	IN35	78	I	OE2	118	O	TSTO	158	I	IN13
39	I	IN34	79	I	OE3	119	I	RST	159	I	IN12
40	–	VDD	80	–	VDD	120	–	VDD	160	–	VDD

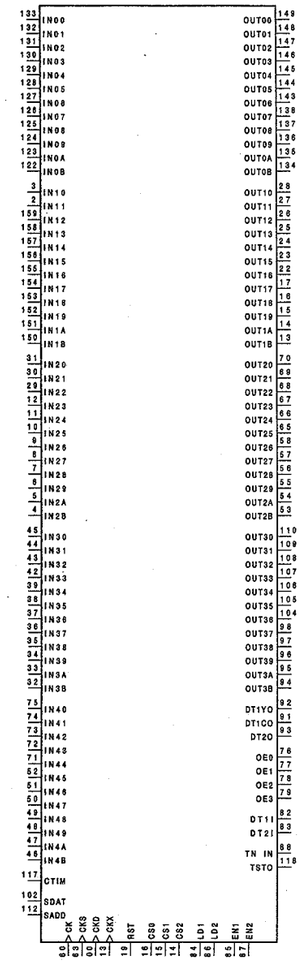

INPUT
CK ;SYSTEM CLOCK
CKD ;CLOCK FOR CS0,CS1,CS2,SADD,SDAT
CKS ;CLOCK FOR SAMPLE AND HOLD CIRCUIT IN OUT1
CKX ;TIMING FOR SERIAL CONTROL EXECUTION
CS0,CS1,CS2
;CHIP SELECT
CTIM ;COLOR TIMING SPECIFIED
DT1I,DT2I
;SAMPLE PULSE FOR SAMPLE AND HOLD CIRCUIT IN OUT1,OUT2
EN1,EN2 ;NAMADD1,NAMADD2 CIRCUIT ENABLE(IN COUNTER MODE)
IN00-IN0B,IN10-IN1B,IN20-IN2B,IN30-IN3B,IN40-IN4B
;DATA INPUTS
LD1,LD2 ;NAMADD1,NAMADD2 CICUIT LOAD PIN(IN COUNTER MODE)
OE0,OE1,OE2,OE3
;OUTPUT ENABLE FOR OUT0,OUT1,OUT2,OUT3
SADD ;SERIAL ADDRESS
RST ;POWER RESET
TN IN ;TEST TERMINAL

OUTPUT
DT1Y0,DT1C0,DT20
;SAMPLE PULSE OUTPUT
OUT00-OUT0B,OUT10-OUT1B,OUT20-OUT2B,OUT30-OUT3B
;DATA OUTPUTS
TST0 ;TEST TERMINAL

INPUT/OUTPUT
SDAT ;SERIAL DATA

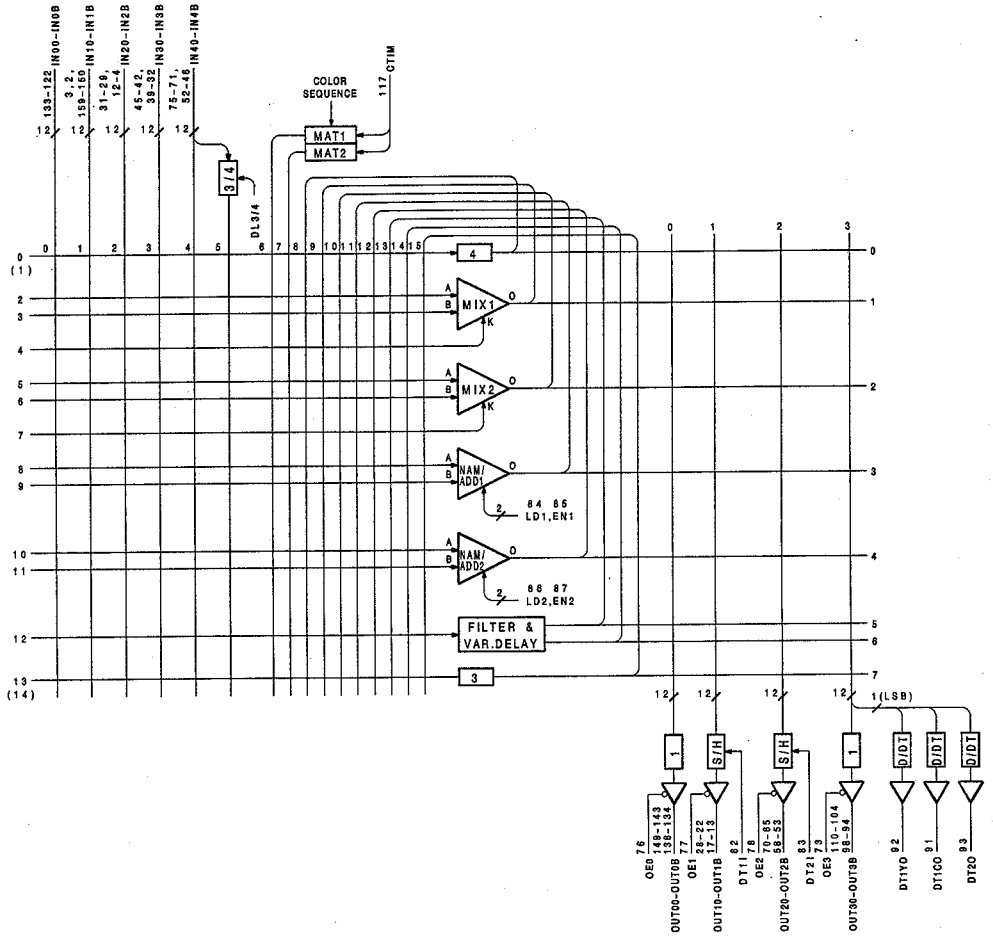
IN00-IN0B
IN10-IN1B
IN20-IN2B
IN30-IN3B
IN40-IN4B
COLOR SEQUENCE
CTIM
MAT1
MAT2
3/4
DLS3/4
MIX1
MIX2
NAM/ ADD1
NAM/ ADD2
LD1,EN1
LD2,EN2
FILTER & VAR.DELAY
S/H
D/DT
1(LSB)
OE0
OUT00-OUT0B
OE1
OUT10-OUT1B
OE2
OUT20-OUT2B
OE3
OUT30-OUT3B
DT1Y0
DT1C0
DT20

HD647180X (HITACHI)

C-MOS 8-BIT MICRO PROCESSING UNIT
– TOP VIEW –

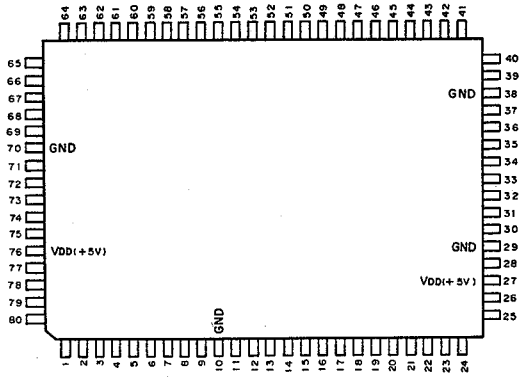

INPUT

AN0 – AN5	; ANALOG INPUT
BUSREQ	; BUS REQUEST
CTS0, 1	; CLEAR TO SEND FOR ASYNCHRONOUS SCI CHANNEL n (n = 0 OR 1)
DCD0, 1	; DATA CARRIER DETECT FOR ASYNCHRONOUS SCI CHANNEL n (n = 0 OR 1)
DREQ0, 1	; DMA REQUEST FOR CHANNEL n (n = 0 OR 1)
EXTAL	; EXTERNAL CLOCK
IC	; INPUT CAPTURE
INT0 – 2	; INTERRUPT
MP0, 1	; MOD PROGRAM
NMI	; NON-MASKABLE INTERRUPT
PG0 – PG5	; 6-BIT INPUT OF PORT G
RXA0, 1	; RECEIVE DATA FOR ASYNCHRONOUS SCI CHANNEL n (n = 0 OR 1)
RXS	; RECEIVE DATA FOR SERIAL I/O PORT
XTAL	; CLOCK

OUTPUT

A0 – A19	; ADDRESS BUS
BUSACK	; BUS ACKNOWLEDGE
E	; EANBLE
IOE	; I/O ENABLE
LIR	; LOAD INSTRUCTION REGISTER
ME	; MEMORY ENABLE
RD	; READ
REF	; REFRESH
RTS0, 1	; REQUEST TO SEND FOR ASYNCHRONOUS SCI CHANNEL n (n = 0 OR 1)
ST	; STATUS
TEND0, 1	; TRANSFER END FOR CHANNEL n (n = 0 OR 1)
TOUT1 – 3	; TIMER OUT
TXA0, 1	; TRANSFER DATA FOR ASYNCHRONOUS SCI CHANNEL n (n = 0 OR 1)
TXS	; TRANSFER DATA FOR SERIAL I/O PORT
WR	; WRITE
φ	; SYSTEM CLOCK

INPUT/OUTPUT

CKA0, 1	; CLOCK FOR ASYNCHRONOUS SCI CHANNEL n (n = 0 OR 1)
CKS	; CLOCK FOR SERIAL I/O PORT
D0 – D7	; DATA BUS
PA0 – PA7	; 8-BIT INPUT/OUTPUT OF PORT A
PB0 – PB7	; 8-BIT INPUT/OUTPUT OF PORT B
PC0 – PC7	; 8-BIT INPUT/OUTPUT OF PORT C
PD0 – PD7	; 8-BIT INPUT/OUTPUT OF PORT D
PE0 – PE7	; 8-BIT INPUT/OUTPUT OF PORT E
PF0 – PF7	; 8-BIT INPUT/OUTPUT OF PORT F

MODE 0	; HD643180X, HD647180X
MODE 1	; HD641180XF6, HD643180X, HD647180X
MODE 2	; HD643180X, HD647180X
PROM MODE	; HD647180X

PIN No.	MODE 0 I/O	MODE 0 SIGNAL	MODE 1 I/O	MODE 1 SIGNAL	MODE 2 I/O	MODE 2 SIGNAL	PROM MODE I/O	PROM MODE SIGNAL
1	I	NMI	I	NMI	I	NMI	O	A9
2	I	INT0	I	INT0	I	INT0	–	NC
3	I	INT1	I	INT1	I	INT1	–	NC
4	I	INT2	I	INT2	I	INT2	–	NC
5	I/O	PE4	O	ST	O	ST	–	NC
6	I/O	PC0	O	A0	O	A0	O	A0
7	I/O	PC1	O	A1	O	A1	O	A1
8	I/O	PC2	O	A2	O	A2	O	A2
9	I/O	PC3	O	A3	O	A3	O	A3
10	–	GND	–	GND	–	GND	–	GND
11	I/O	PC4	O	A4	O	A4	O	A4
12	I/O	PC5	O	A5	O	A5	O	A5
13	I/O	PC6	O	A6	O	A6	O	A6
14	I/O	PC7	O	A7	O	A7	O	A7
15	I/O	PD0	O	A8	I/O	A8/PD0	O	A8
16	I/O	PD1	O	A9	I/O	A9/PD1	–	NC
17	I/O	PD2	O	A10	I/O	A10/PD2	O	A10
18	I/O	PD3	O	A11	I/O	A11/PD3	O	A11
19	I/O	PD4	O	A12	I/O	A12/PD4	O	A12
20	I/O	PD5	O	A13	I/O	A13/PD5	O	A13
21	I/O	PD6	O	A14	I/O	A14/PD6	O	A14
22	I/O	PD7	O	A15	I/O	A15/PD7	I	OE
23	I/O	PE0	O	A16	I/O	A16/PE0	I	CE
24	I/O	PE1	O	A17	I/O	A17/PE1	–	NC
25	I/O	PE2	O	A18	I/O	A18/PE2	–	NC
26	O	TOUT1	O	TOUT1	O	TOUT1	–	NC
27	–	VDD	–	VDD	–	VDD	–	VDD
28	I/O	PE3	O	A19	I/O	A19/PE3	–	NC
29	–	GND	–	GND	–	GND	–	GND
30	I/O	PF0	I/O	D0	I/O	D0	O	O0
31	I/O	PF1	I/O	D1	I/O	D1	O	O1
32	I/O	PF2	I/O	D2	I/O	D2	O	O2
33	I/O	PF3	I/O	D3	I/O	D3	O	O3
34	I/O	PF4	I/O	D4	I/O	D4	O	O4
35	I/O	PF5	I/O	D5	I/O	D5	O	O5
36	I/O	PF6	I/O	D6	I/O	D6	O	O6
37	I/O	PF7	I/O	D7	I/O	D7	O	O7
38	–	GND	–	GND	–	GND	–	GND
39	I	PG0/AN0	I	PG0/AN0	I	PG0/AN0	–	NC
40	I	PG1/AN1	I	PG1/AN1	I	PG1/AN1	–	NC

PIN No.	MODE 0 I/O	MODE 0 SIGNAL	MODE 1 I/O	MODE 1 SIGNAL	MODE 2 I/O	MODE 2 SIGNAL	PROM MODE I/O	PROM MODE SIGNAL
41	I	PG2/AN2	I	PG2/AN2	I	PG2/AN2	–	NC
42	I	PG3/AN3	I	PG3/AN3	I	PG3/AN3	–	NC
43	I	PG4/AN4	I	PG4/AN4	I	PG4/AN4	–	NC
44	I	PG5/AN5	I	PG5/AN5	I	PG5/AN5	–	NC
45	O	RTS0	O	RTS0	O	RTS0	–	NC
46	I	CTS0	I	CTS0	I	CTS0	–	NC
47	I	DCD0	I	DCD0	I	DCD0	–	NC
48	O	TXA0	O	TXA0	O	TXA0	–	NC
49	I	RXA0	I	RXA0	I	RXA0	–	NC
50	I/O	CKA0/DREQ0	I/O	CKA0/DREQ0	I/O	CKA0/DREQ0	–	NC
51	O	TOUT2	O	TOUT2	O	TOUT2	–	NC
52	O	TOUT3	O	TOUT3	O	TOUT3	–	NC
53	I	IC	I	IC	I	IC	–	NC
54	I/O	TXA1/PA0	I/O	TXA1/PA0	I/O	TXA1/PA0	–	NC
55	I/O	RXA1/PA1	I/O	RXA1/PA1	I/O	RXA1/PA1	–	NC
56	I/O	CKA1/TEND0/PA2	I/O	CKA1/TEND0/PA2	I/O	CKA1/TEND0/PA2	–	NC
57	I/O	TXS/PA3	I/O	TXS/PA3	I/O	TXS/PA3	–	NC
58	I/O	RXS/CTS1/PA4	I/O	RXS/CTS1/PA4	I/O	RXS/CTS1/PA4	–	NC
59	I/O	CKS/PA5	I/O	CKS/PA5	I/O	CKS/PA5	–	NC
60	I/O	DREQ1/PA6	I/O	DREQ1/PA6	I/O	DREQ1/PA6	–	NC
61	I/O	TEND1/PA7	I/O	TEND1/PA7	I/O	TEND1/PA7	–	NC
62	I/O	PB7	O	HALT	O	HALT	–	NC
63	I/O	PB6	O	REF	O	REF	–	NC
64	I/O	PB5	O	IOE	O	IOE	–	NC
65	I/O	PB4	O	ME	O	ME	–	NC
66	I/O	PB3	O	E	O	E	–	NC
67	I/O	PB2	O	LIR	O	LIR	–	NC
68	I/O	PB1	O	WR	O	WR	–	NC
69	I/O	PB0	O	RD	O	RD	–	NC
70	–	GND	–	GND	–	GND	–	GND
71	O	φ	O	φ	O	φ	–	NC
72	I	MP1	I	MP1	I	MP1	I	MP1
73	I	MP0	I	MP0	I	MP0	I	MP0
74	I	XTAL	I	XTAL	I	XTAL	I	XTAL
75	I	EXTAL	I	EXTAL	I	EXTAL	I	EXTAL
76	–	VDD	–	VDD	–	VDD	–	VDD
77	I/O	PE7	I	WAIT	I	WAIT	–	NC
78	I/O	PE6	O	BUSACK	O	BUSACK	–	NC
79	I/O	PE5	I	BUSREQ	I	BUSREQ	–	NC
80	I	RESET	I	RESET	I	RESET	–	VPP

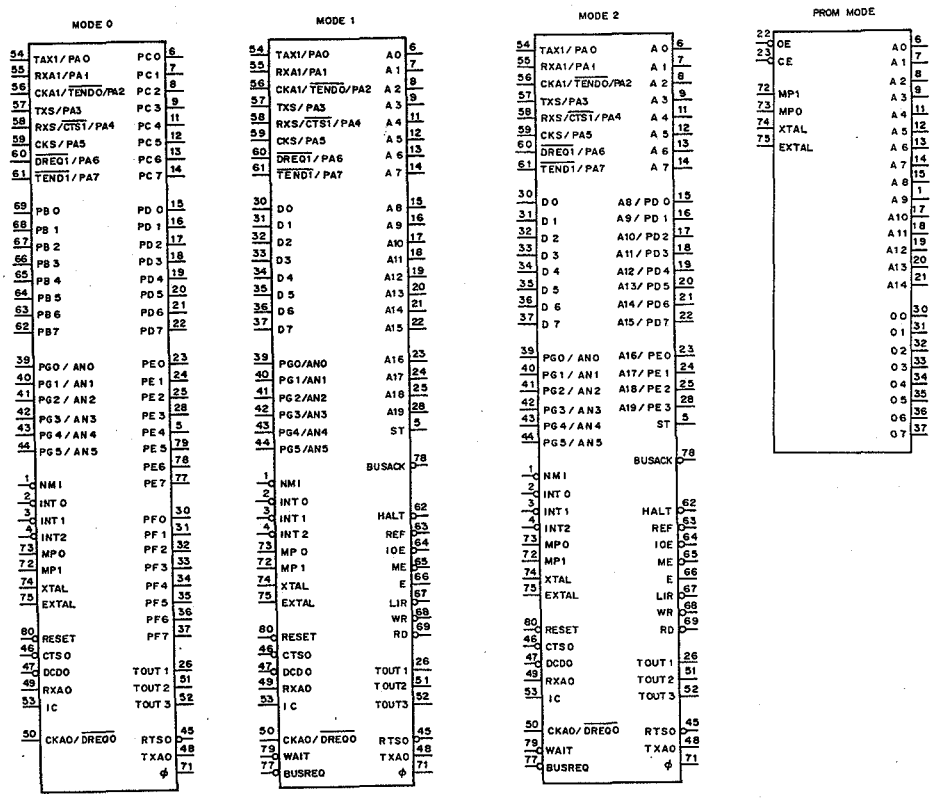
MODE 0
MODE 1
MODE 2
PROM MODE

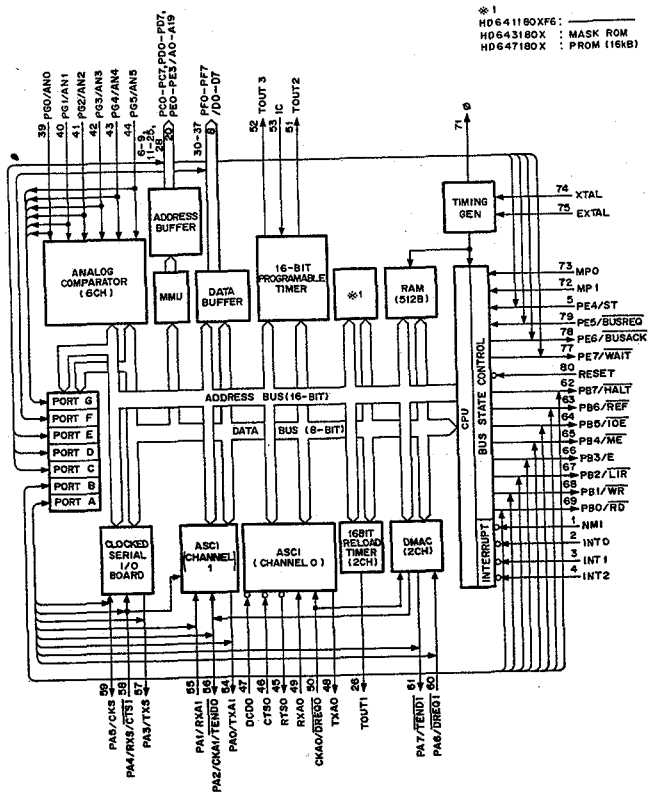
※1
HD641180XF6 : ——
HD643180X : MASK ROM
HD647180X : PROM (16kB)
TIMING GEN
ADDRESS BUFFER
ANALOG COMPARATOR (6CH)
MMU
DATA BUFFER
16-BIT PROGRAMABLE TIMER
※1
RAM (512B)
ADDRESS BUS(16-BIT)
DATA BUS (8-BIT)
CPU
BUS STATE CONTROL
INTERRUPT
PORT G
PORT F
PORT E
PORT D
PORT C
PORT B
PORT A
CLOCKED SERIAL I/O BOARD
ASCI (CHANNEL 1)
ASCI (CHANNEL 0)
16BIT RELOAD TIMER (2CH)
DMAC (2CH)

HD647180XOCP6 (HITACHI)

C-MOS 8-BIT MICRO PROCESSING UNIT
– TOP VIEW –

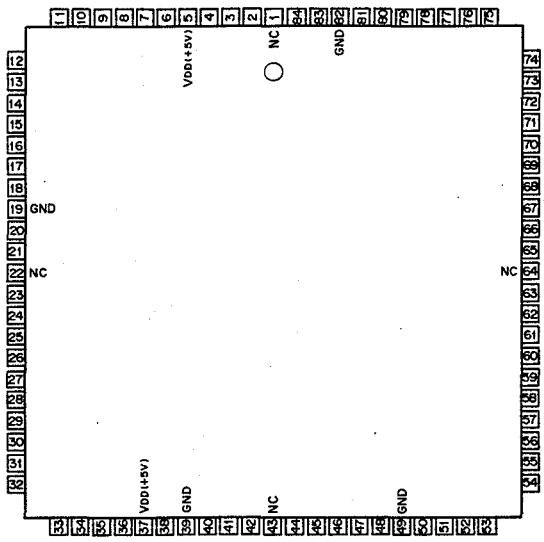

INPUT

AN0 – AN5	; ANALOG INPUT
BUSREQ	; BUS REQUEST
CTS0, 1	; CLEAR TO SEND FOR ASYNCHRONOUS SCI CHANNEL n (n = 0 OR 1)
DCD0, 1	; DATA CARRIER DETECT FOR ASYNCHRONOUS SCI CHANNEL n (n = 0 OR 1)
DREQ0, 1	; DMA REQUEST FOR CHANNEL n (n = 0 OR 1)
EXTAL	; EXTERNAL CLOCK
IC	; INPUT CAPTURE
INT0 – 2	; INTERRUPT
MP0, 1	; MOD PROGRAM
NMI	; NON-MASKABLE INTERRUPT
PG0 – PG5	; 6-BIT INPUT OF PORT G
RXA0, 1	; RECEIVE DATA FOR ASYNCHRONOUS SCI CHANNEL n (n = 0 OR 1)
RXS	; RECEIVE DATA FOR SERIAL I/O PORT
XTAL	; CLOCK

OUTPUT

A0 – A19	; ADDRESS BUS
BUSACK	; BUS ACKNOWLEDGE
E	; EANBLE
IOE	; I/O ENABLE
LIR	; LOAD INSTRUCTION REGISTER
ME	; MEMORY ENABLE
RD	; READ
REF	; REFRESH
RTS0, 1	; REQUEST TO SEND FOR ASYNCHRONOUS SCI CHANNEL n (n = 0 OR 1)
ST	; STATUS
TEND0, 1	; TRANSFER END FOR CHANNEL n (n = 0 OR 1)
TOUT1 – 3	; TIMER OUT
TXA0, 1	; TRANSFER DATA FOR ASYNCHRONOUS SCI CHANNEL n (n = 0 OR 1)
TXS	; TRANSFER DATA FOR SERIAL I/O PORT
WR	; WRITE
φ	; SYSTEM CLOCK

INPUT/OUTPUT

CKA0, 1	; CLOCK FOR ASYNCHRONOUS SCI CHANNEL n (n = 0 OR 1)
CKS	; CLOCK FOR SERIAL I/O PORT
D0 – D7	; DATA BUS
PA0 – PA7	; 8-BIT INPUT/OUTPUT OF PORT A
PB0 – PB7	; 8-BIT INPUT/OUTPUT OF PORT B
PC0 – PC7	; 8-BIT INPUT/OUTPUT OF PORT C
PD0 – PD7	; 8-BIT INPUT/OUTPUT OF PORT D
PE0 – PE7	; 8-BIT INPUT/OUTPUT OF PORT E
PF0 – PF7	; 8-BIT INPUT/OUTPUT OF PORT F

PIN No.	MODE 0		MODE 1		MODE 2		PROM MODE	
	I/O	SIGNAL	I/O	SIGNAL	I/O	SIGNAL	I/O	SIGNAL
1	–	NC	–	NC	–	NC	–	NC
2	I	MP0	I	MP0	I	MP0	I	MP0
3	I	XTAL	I	XTAL	I	XTAL	I	XTAL
4	I	EXTAL	I	EXTAL	I	EXTAL	I	EXTAL
5	–	VDD	–	VDD	–	VDD	–	VDD
6	I/O	PE7	I	WAIT	I	WAIT	–	NC
7	I/O	PE6	O	BUSACK	O	BUSACK	–	NC
8	I/O	PE5	I	BUSREQ	I	BUSREQ	–	NC
9	I	RESET	I	RESET	I	RESET	–	VPP
10	I	NMI	I	NMI	I	NMI	O	A9
11	I	INT0	I	INT0	I	INT0	–	NC
12	I	INT1	I	INT1	I	INT1	–	NC
13	I	INT2	I	INT2	I	INT2	–	NC
14	I/O	PE4	O	ST	O	ST	–	NC
15	I/O	PC0	O	A0	O	A0	O	A0
16	I/O	PC1	O	A1	O	A1	O	A1
17	I/O	PC2	O	A2	O	A2	O	A2
18	I/O	PC3	O	A3	O	A3	O	A3
19	–	GND	–	GND	–	GND	–	GND
20	I/O	PC4	O	A4	O	A4	O	A4
21	I/O	PC5	O	A5	O	A5	O	A5
22	–	NC	–	NC	–	NC	–	NC
23	I/O	PC6	O	A6	O	A6	O	A6
24	I/O	PC7	O	A7	O	A7	O	A7
25	I/O	PD0	O	A8	I/O	A8/PD0	O	A8
26	I/O	PD1	O	A9	I/O	A9/PD1	–	NC
27	I/O	PD2	O	A10	I/O	A10/PD2	O	A10
28	I/O	PD3	O	A11	I/O	A11/PD3	O	A11
29	I/O	PD4	O	A12	I/O	A12/PD4	O	A12
30	I/O	PD5	O	A13	I/O	A13/PD5	O	A13
31	I/O	PD6	O	A14	I/O	A14/PD6	O	A14
32	I/O	PD7	O	A15	I/O	A15/PD7	I	OE
33	I/O	PE0	O	A16	I/O	A16/PE0	I	CE
34	I/O	PE1	O	A17	I/O	A17/PE1	–	NC
35	I/O	PE2	O	A18	I/O	A18/PE2	–	NC
36	O	TOUT1	O	TOUT1	O	TOUT1	–	NC
37	–	VDD	–	VDD	–	VDD	–	VDD
38	I/O	PE3	O	A19	I/O	A19/PE3	–	NC
39	–	GND	–	GND	–	GND	–	GND
40	I/O	PF0	I/O	D0	I/O	D0	O	O0
41	I/O	PF1	I/O	D1	I/O	D1	O	O1
42	I/O	PF2	I/O	D2	I/O	D2	O	O2

PIN No.	MODE 0		MODE 1		MODE 2		PROM MODE	
	I/O	SIGNAL	I/O	SIGNAL	I/O	SIGNAL	I/O	SIGNAL
43	–	NC	–	NC	–	NC	–	NC
44	I/O	PF3	I/O	D3	I/O	D3	O	O3
45	I/O	PF4	I/O	D4	I/O	D4	O	O4
46	I/O	PF5	I/O	D5	I/O	D5	O	O5
47	I/O	PF6	I/O	D6	I/O	D6	O	O6
48	I/O	PF7	I/O	D7	I/O	D7	O	O7
49	–	GND	–	GND	–	GND	–	GND
50	I	PG0/AN0	I	PG0/AN0	I	PG0/AN0	–	NC
51	I	PG1/AN1	I	PG1/AN1	I	PG1/AN1	–	NC
52	I	PG2/AN2	I	PG2/AN2	I	PG2/AN2	–	NC
53	I	PG3/AN3	I	PG3/AN3	I	PG3/AN3	–	NC
54	I	PG4/AN4	I	PG4/AN4	I	PG4/AN4	–	NC
55	I	PG5/AN5	I	PG5/AN5	I	PG5/AN5	–	NC
56	O	RTS0	O	RTS0	O	RTS0	–	NC
57	I	CTS0	I	CTS0	I	CTS0	–	NC
58	I	DCD0	I	DCD0	I	DCD0	–	NC
59	O	TXA0	O	TXA0	O	TXA0	–	NC
60	I	RXA0	I	RXA0	I	RXA0	–	NC
61	I/O	CKA0/DREQ0	I/O	CKA0/DREQ0	I/O	CKA0/DREQ0	–	NC
62	O	TOUT2	O	TOUT2	O	TOUT2	–	NC
63	O	TOUT3	O	TOUT3	O	TOUT3	–	NC
64	–	NC	–	NC	–	NC	–	NC
65	I	IC	I	IC	I	IC	–	NC
66	I/O	TXA1/PA0	I/O	TXA1/PA0	I/O	TXA1/PA0	–	NC
67	I/O	RXA1/PA1	I/O	RXA1/PA1	I/O	RXA1/PA1	–	NC
68	I/O	CKA1/TEND0/PA2	I/O	CKA1/TEND0/PA2	I/O	CKA1/TEND0/PA2	–	NC
69	I/O	TXS/PA3	I/O	TXS/PA3	I/O	TXS/PA3	–	NC
70	I/O	RXS/CTS1/PA4	I/O	RXS/CTS1/PA4	I/O	RXS/CTS1/PA4	–	NC
71	I/O	CKS/PA5	I/O	CKS/PA5	I/O	CKS/PA5	–	NC
72	I/O	DREQ1/PA6	I/O	DREQ1/PA6	I/O	DREQ1/PA6	–	NC
73	I/O	TEND1/PA7	I/O	TEND1/PA7	I/O	TEND1/PA7	–	NC
74	I/O	PB7	O	HALT	O	HALT	–	NC
75	I/O	PB6	O	REF	O	REF	–	NC
76	I/O	PB5	O	IOE	O	IOE	–	NC
77	I/O	PB4	O	ME	O	ME	–	NC
78	I/O	PB3	O	E	O	E	–	NC
79	I/O	PB2	O	LIR	O	LIR	–	NC
80	I/O	PB1	O	WR	O	WR	–	NC
81	I/O	PB0	O	RD	O	RD	–	NC
82	–	GND	–	GND	–	GND	–	GND
83	O	φ	O	φ	O	φ	–	NC
84	I	MP1	I	MP1	I	MP1	I	MP1

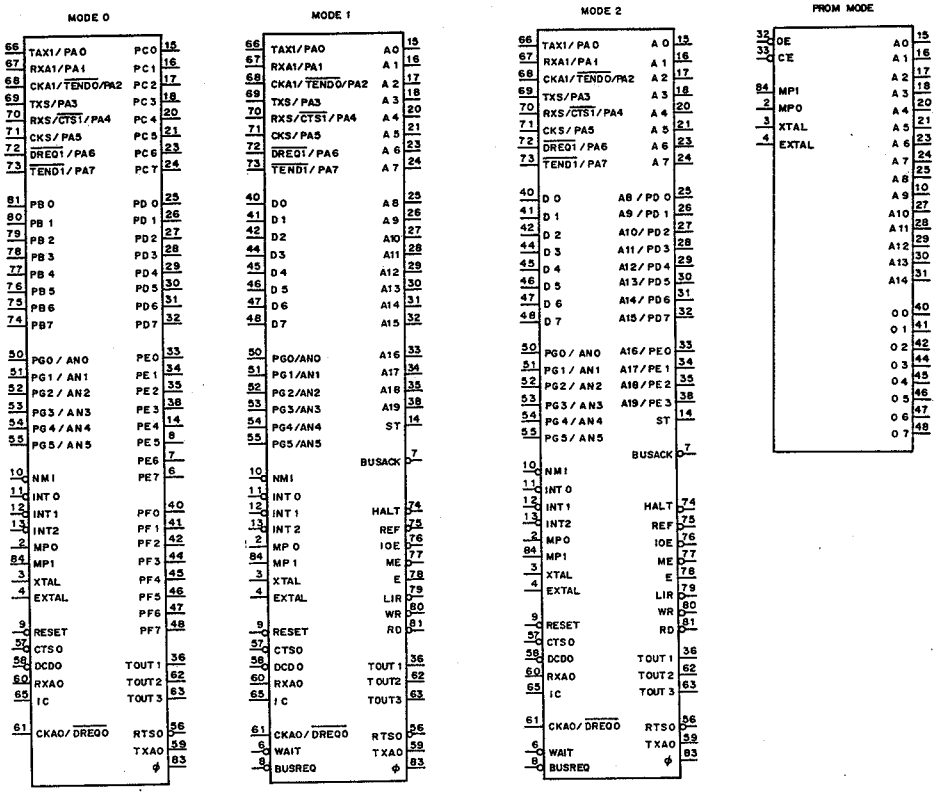
MODE 0
TAX1/PA0
RXA1/PA1
CKA1/TEND0/PA2
TXS/PA3
RXS/CTS1/PA4
CKS/PA5
DREQ1/PA6
TEND1/PA7
PB0
PB1
PB2
PB3
PB4
PB5
PB6
PB7
PG0/AN0
PG1/AN1
PG2/AN2
PG3/AN3
PG4/AN4
PG5/AN5
NMI
INT0
INT1
INT2
MP0
MP1
XTAL
EXTAL
RESET
CTS0
DCD0
RXA0
IC
CKA0/DREQ0
PC0
PC1
PC2
PC3
PC4
PC5
PC6
PC7
PD0
PD1
PD2
PD3
PD4
PD5
PD6
PD7
PE0
PE1
PE2
PE3
PE4
PE5
PE6
PE7
PF0
PF1
PF2
PF3
PF4
PF5
PF6
PF7
TOUT1
TOUT2
TOUT3
RTS0
TXA0
φ
MODE 1
TAX1/PA0
RXA1/PA1
CKA1/TEND0/PA2
TXS/PA3
RXS/CTS1/PA4
CKS/PA5
DREQ1/PA6
TEND1/PA7
D0
D1
D2
D3
D4
D5
D6
D7
A8
A9
A10
A11
A12
A13
A14
A15
PG0/AN0
PG1/AN1
PG2/AN2
PG3/AN3
PG4/AN4
PG5/AN5
A16
A17
A18
A19
ST
BUSACK
NMI
INT0
INT1
INT2
MP0
MP1
XTAL
EXTAL
RESET
CTS0
DCD0
RXA0
IC
CKA0/DREQ0
WAIT
BUSREQ
HALT
REF
IOE
ME
E
LIR
WR
RD
TOUT1
TOUT2
TOUT3
RTS0
TXA0
φ
MODE 2
TAX1/PA0
RXA1/PA1
CKA1/TEND0/PA2
TXS/PA3
RXS/CTS1/PA4
CKS/PA5
DREQ1/PA6
TEND1/PA7
A0
A1
A2
A3
A4
A5
A6
A7
D0
D1
D2
D3
D4
D5
D6
D7
A8/PD0
A9/PD1
A10/PD2
A11/PD3
A12/PD4
A13/PD5
A14/PD6
A15/PD7
PG0/AN0
PG1/AN1
PG2/AN2
PG3/AN3
PG4/AN4
PG5/AN5
A16/PE0
A17/PE1
A18/PE2
A19/PE3
ST
BUSACK
NMI
INT0
INT1
INT2
MP0
MP1
XTAL
EXTAL
RESET
CTS0
DCD0
RXA0
IC
CKA0/DREQ0
WAIT
BUSREQ
HALT
REF
IOE
ME
E
LIR
WR
RD
TOUT1
TOUT2
TOUT3
RTS0
TXA0
φ
PROM MODE
OE
CE
MP1
MP0
XTAL
EXTAL
A0
A1
A2
A3
A4
A5
A6
A7
A8
A9
A10
A11
A12
A13
A14
O0
O1
O2
O3
O4
O5
O6
O7

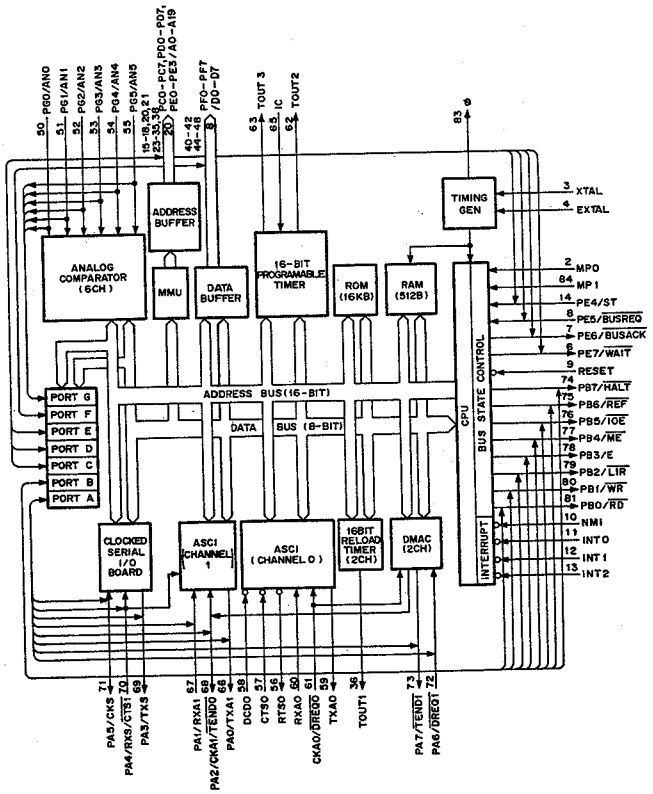
PG0/AN0
PG1/AN1
PG2/AN2
PG3/AN3
PG4/AN4
PG5/AN5
PC0-PC7,PD0-PD7,
PE0-PE5/A0-A19
PF0-PF7
/D0-D7
TOUT3
IC
TOUT2
φ
TIMING GEN
XTAL
EXTAL
ADDRESS BUFFER
ANALOG COMPARATOR (6CH)
MMU
DATA BUFFER
16-BIT PROGRAMABLE TIMER
ROM (16KB)
RAM (512B)
MP0
MP1
PE4/ST
PE5/BUSREQ
PE6/BUSACK
PE7/WAIT
RESET
PB7/HALT
PB6/REF
PB5/IOE
PB4/ME
PB3/E
PB2/LIR
PB1/WR
PB0/RD
NMI
INT0
INT1
INT2
ADDRESS BUS (16-BIT)
DATA BUS (8-BIT)
CPU BUS STATE CONTROL
INTERRUPT
PORT G
PORT F
PORT E
PORT D
PORT C
PORT B
PORT A
CLOCKED SERIAL I/O BOARD
ASCI (CHANNEL 1)
ASCI (CHANNEL 0)
16BIT RELOAD TIMER (2CH)
DMAC (2CH)
PA5/CKS
PA4/RXS/CTS1
PA3/TXS
PA1/RXA1
PA2/CKA1/TEND0
PA0/TXA1
DCD0
CTS0
RTS0
RXA0
CKA0/DREQ0
TXA0
TOUT1
PA7/TEND1
PA6/DREQ1

HM63021FP-28 (HITACHI) FLAT PACKAGE
HM63021P-28 (HITACHI)
2048 WORDx8-BIT LINE MEMORY
– TOP VIEW –

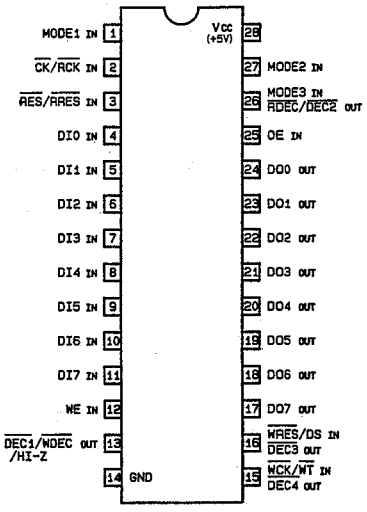

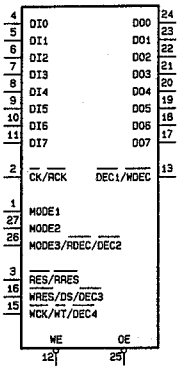

MODE1, 2, 3: MODE SELECT INPUTS
RCK: READ CLOCK INPUT
WCK: WRITE CLOCK INPUT
CK: CLOCK INPUT
RRES: READ RESET INPUT
RES: RESET INPUT
DI0-DI7: DATA INPUTS
WE: WRITE ENABLE INPUT
HI-Z: HIGH IMPEDANCE
WT: WRITE TIMING INPUT
DEC1, 2, 3, 4: DECODE PULSE OUTPUTS
WDEC: WRITE DECODE PULSE OUTPUT
RDEC: READ DECODE PULSE OUTPUT
DS: DELAY SELECT INPUT
DO0-DO7: DATA OUTPUTS
OE: OUTPUT ENABLE INPUT

MODE1	MODE2	MODE3	MODE
1	1	1	TIME BASE COMPRESSING /EXPANDING
1	1	0	DOUBLE SPEED EXCHANGE
1	0	*	TBC
0	1	*	1H/2H DELAY
0	0	*	DELAY LINE

0: LOW LEVEL
1: HIGH LEVEL
*: DEC OUTPUT SIGNAL

PIN NO.	MODE				
	TIME BASE COMPRESSING /EXPANDING	DOUBLE SPEED EXCHANGE	TBC	1H/2H DELAY	DELAY LINE
1	MODE1				
2	RCK			CK	
3	ARES			RES	
4-11	DI0-DI7				
12	WE				
13	HI-Z		WDEC	DEC1	
15	WCK			WT	DEC4
16	WRES			DS	DEC3
17-24	DO0-DO7				
25	OE				
26	MODE3		RDEC	DEC2	
27	MODE2				

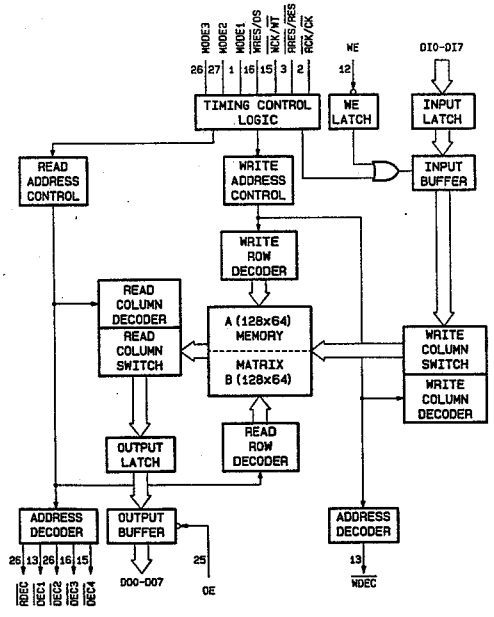

ICL7621BCSA (MAXIM) FLAT PACKAGE
C-MOS DUAL OPERATIONAL AMPLIFIER
– TOP VIEW –

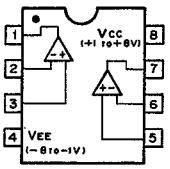

LM1881M (NS) FLAT PACKAGE
VIDEO SYNC SEPARATOR
– TOP VIEW –

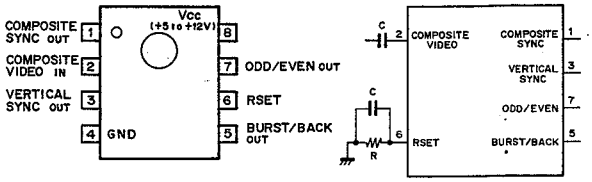

TIMING CHART

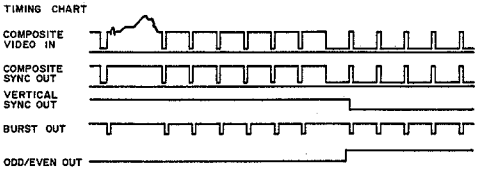

LM360M (NS) FLAT PACKAGE
HIGH SPEED VOLTAGE COMPARATOR
(TTL OUTPUT)
– TOP VIEW –

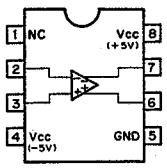

LT1009CZ (LINEAR TECHNOLOGY)
VOLTAGE REFERENCE

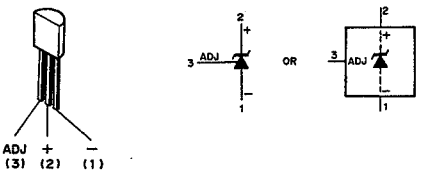

LT1191CS8 (LINEAR TECH) FLAT PACKAGE
HIGH SPEED OPERATIONAL AMPLIFIER
– TOP VIEW –

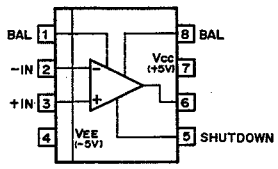

LT1227CS8 (LINEAR TECH) FLAT PACKAGE

HIGH SPEED OPERATIONAL AMPLIFIER

– TOP VIEW –

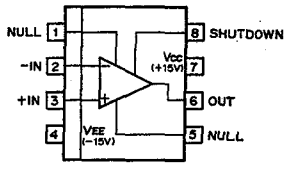

MAX232CPE (MAXIM)

RS-232 TRANSMITTER/RECEIVER

– TOP VIEW –

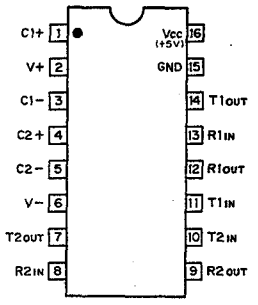

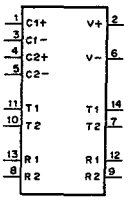

R1,2;RECEIVER 1,2

T1,2;TRANSMITTER 1,2

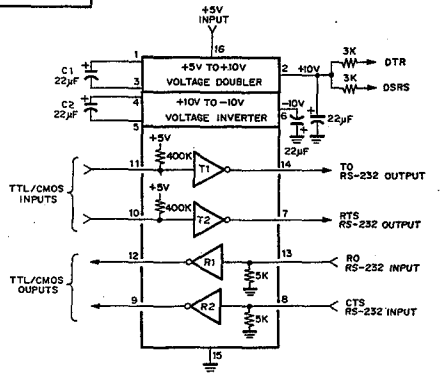

MB766P (FUJITSU)

OCTAL ECL TO TTL LEVEL TRANSLATOR

– TOP VIEW –

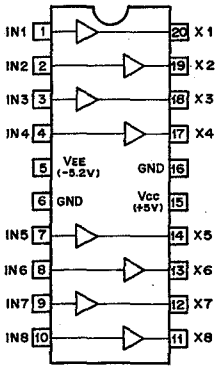

INPUT	OUTPUT
IN(ECL)	X(TTL)
1	1
0	0

0; LOW LEVEL
1; HIGH LEVEL

IN1-IN8; ECL LEVEL INPUT
X1-X8; TTL LEVEL OUTPUT

MAX691CPE (MAXIM)

C-MOS MICROPROCESSOR SUPERVISORY CIRCUITS

– TOP VIEW –

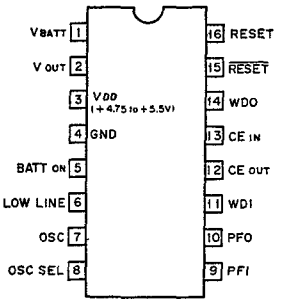

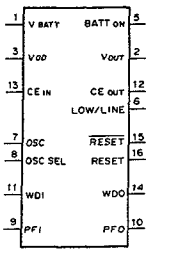

CE : CHIP ENABLE
PFI, PFO : POWER FAIL INPUT/OUTPUT
WDI, WDO : WATCHDOG INPUT/OUTPUT

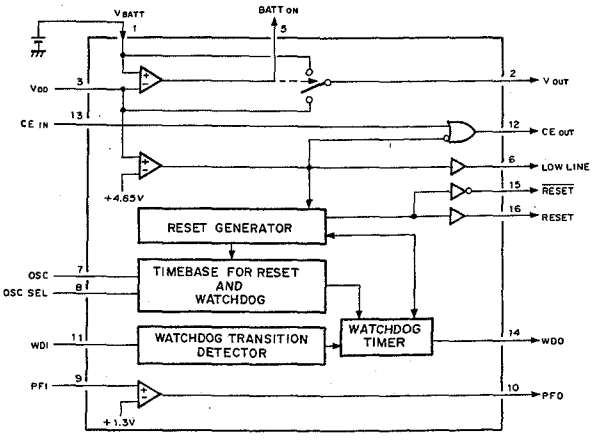

MB84256A-10LPF (FUJITSU) FLAT PACKAGE

C-MOS 256K (32768x8)-BIT STATIC RAM

– TOP VIEW –

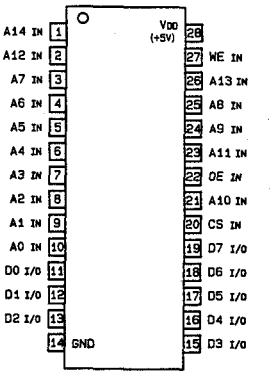

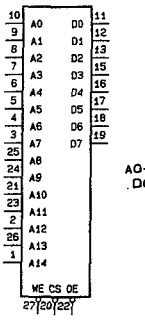

A0–A14; ADDRESS INPUTS
D0–D7; DATA INPUTS/OUTPUTS
CS; CHIP SELECT INPUT
OE; OUTPUT ENABLE INPUT
WE; WRITE ENABLE INPUT

CS	OE	WE	OUTPUTS	FUNCTION
1	X	X	HI-Z	NO SELECTION
0	1	1	HI-Z	OUTPUT DISABLE
0	0	1	D OUT	READ
0	X	0	D IN	WRITE

0; LOW LEVEL
1; HIGH LEVEL
X; DON'T CARE
HI-Z; HIGH IMPEDANCE

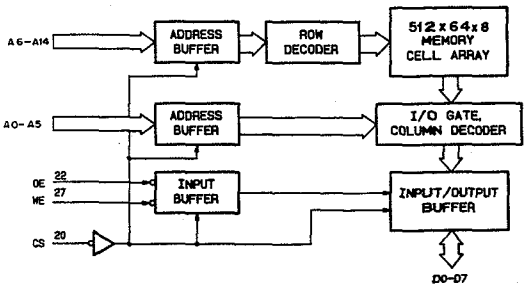

MB8421-90LPFQ (FUJITSU) (ACCESS TIME = 90nS) FLAT PACKAGE
C-MOS 16384 (2Kx8) BIT DUAL PORT STATIC RAM
– TOP VIEW –

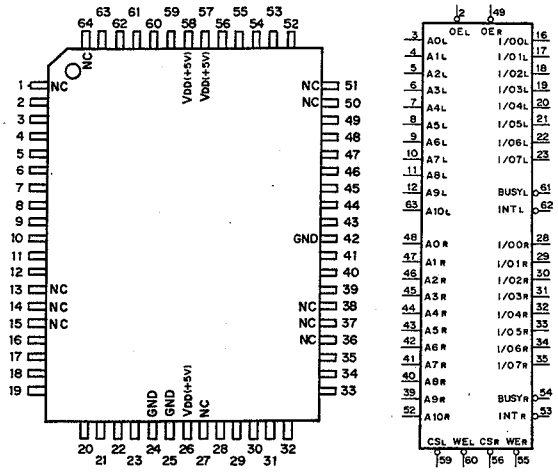

PIN No.	I/O	SIGNAL	PIN No.	I/O	SIGNAL	PIN No.	I/O	SIGNAL	PIN No.	I/O	SIGNAL
1	–	NC	17	I/O	I/O1L	33	I/O	I/O5R	49	I	OER
2	I	OEL	18	I/O	I/O2L	34	I/O	I/O6R	50	–	NC
3	I	A0L	19	I/O	I/O3L	35	I/O	I/O7R	51	–	NC
4	I	A1L	20	I/O	I/O4L	36	–	NC	52	I	A10R
5	I	A2L	21	I/O	I/O5L	37	–	NC	53	O	INTR
6	I	A3L	22	I/O	I/O6L	38	–	NC	54	I	BUSYR
7	I	A4L	23	I/O	I/O7L	39	I	A9R	55	I	WER
8	I	A5L	24	–	GND	40	I	A8R	56	I	CSR
9	I	A6L	25	–	GND	41	I	A7R	57	–	VDD
10	I	A7L	26	–	VDD	42	I	A6R	58	–	VDD
11	I	A8L	27	–	NC	43	I	A5R	59	I	CSL
12	I	A9L	28	I/O	I/O0R	44	I	A4R	60	I	WEL
13	–	NC	29	I/O	I/O1R	45	I	A3R	61	I	BUSYL
14	–	NC	30	I/O	I/O2R	46	I	A2R	62	O	INTL
15	–	NC	31	I/O	I/O3R	47	I	A1R	63	I	A10L
16	I/O	I/O0L	32	I/O	I/O4R	48	I	A0R	64	–	NC

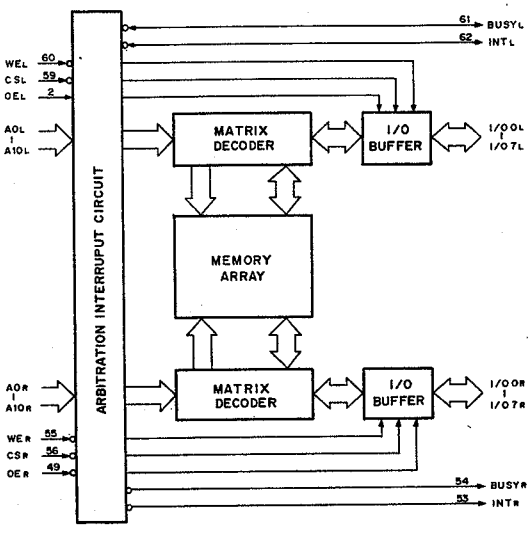

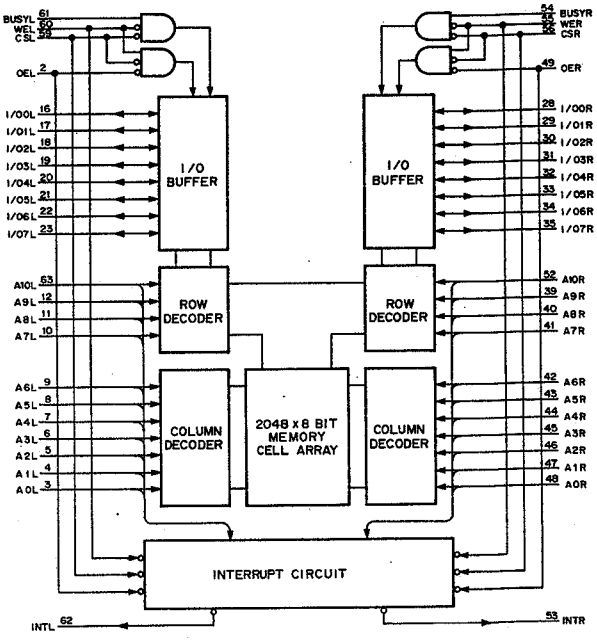

MB8431-90LPFQ (FUJITSU)
C-MOS 16K (2048x8)-BIT DUAL PORT STATIC RAM
– TOP VIEW –

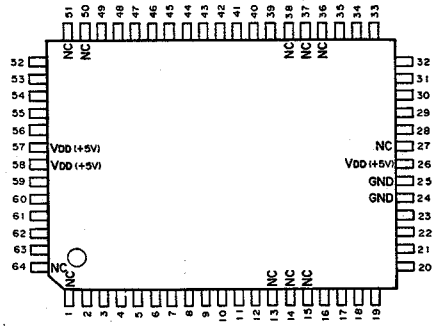

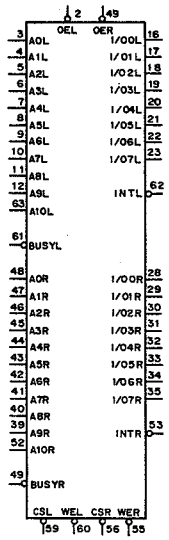

A0L – A10L,
A0R – A10R : ADDRESS INPUTS
BUSYL, BUSYR : BUSY INPUTS
CSL, CSR : CHIP SELECT INPUTS
I/O0L – I/O10L,
I/O0R – I/O10R : DATA INPUTS/OUTPUTS
INTL, INTR : INTERRUPT OUTPUTS
OEL, OER : OUTPUT ENABLE INPUTS
WEL, WER : WRITE ENABLE INPUTS

MB88325PF (FUJITSU)

C-MOS PROGRAMMABLE TV DISPLAY CONTROLLER
– TOP VIEW –

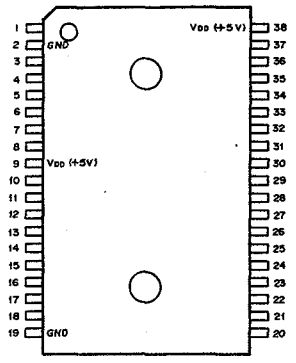

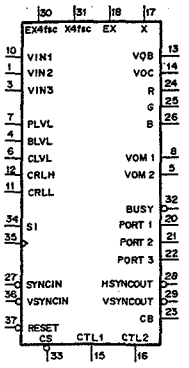

VDD = +5V

PIN NO.	I/O	SIGNAL	PIN NO.	I/O	SIGNAL	PIN NO.	I/O	SIGNAL
1	I	VIN2	14	O	VOC	27	I	SYNCIN
2	–	GND	15	I	CTL1	28	O	HSYNCOUT
3	I	VIN3	16	I	CTL2	29	O	VSYNCOUT
4	I	BLVL	17	O	X	30	O	X4 fsc
5	O	VOM2	18	I	EX	31	I	EX4 fsc
6	I	CLVL	19	–	GND	32	O	BUSY
7	I	PLVL	20	O	PORT1	33	I	CS
8	O	VOM1	21	O	PORT2	34	I	SI
9	–	VDD	22	O	PORT3	35	I	SCLK
10	I	VIN1	23	O	CB	36	I	VSYNCIN
11	I	CRLL	24	O	R	37	I	RESET
12	I	CRLH	25	O	G	38	–	VDD
13	O	VOB	26	O	B			

INPUT
BLVL ; BORDER OR BACKGROUND LEVEL CONTROL IN
CLVL ; CHARACTER LEVEL CONTROL IN
CRLH ; CHROMA HIGH LEVEL CONTROL IN
CRLL ; CHROMA LOW LEVEL CONTROL IN
CS ; CHIP SELECT IN
CTL1 ; CHARACTER MIX OUTPUT SELECT IN
CTL2 ; VIDEO INPUT SELECT IN
SYNCIN ; COMP SYNC IN
PLVL ; INTERNAL VIDEO SIGNAL LEVEL CONTROL IN
RESET ; RESET IN
SCLK ; SHIFT CLOCK IN
SI ; SERIAL DATA IN
VIN1 ; VIDEO SIGNAL IN1
VIN2 ; VIDEO SIGNAL IN2
VIN3 ; VIDEO SIGNAL IN3
VSYNCIN ; V SYNC IN

OUTPUT
B ; BLUE SIGNAL OUT
BUSY ; BUSY OUT
CB ; COLOR BURST SIGNAL OUT
G ; GREEN SIGNAL OUT
HSYNCOUT ; H SYNC OUT
PORT1 ; OUTPUT PORT1
PORT2 ; OUTPUT PORT2
PORT3 ; OUTPUT PORT3
R ; RED SIGNAL OUT
VOB ; BORDER OR BACKGROUND SIGNAL OUT
VOC ; CHARACTER SIGNAL OUT
VOM1 ; VIDEO SIGNAL OUT1
VOM2 ; VIDEO SIGNAL OUT2
VSYNCOUT ; V SYNC OUT

OTHER
X, EX ; DOT CLOCK
X4fsc, EX4fsc; COLOR BURST CLOCK

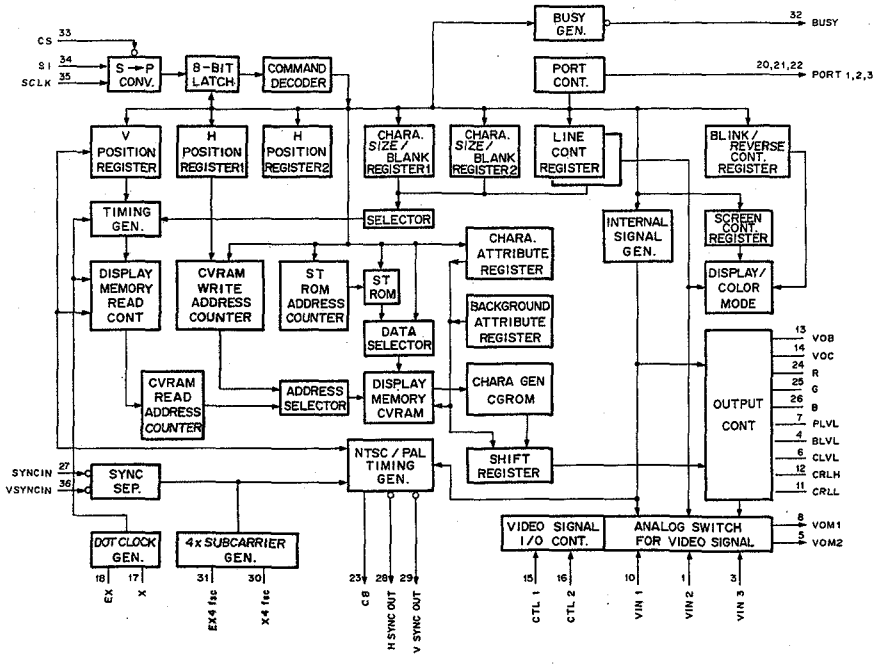

MB88346BPF (FUJITSU) FLAT PACKAGE

C-MOS 8-BIT D/A CONVERTER
– TOP VIEW –

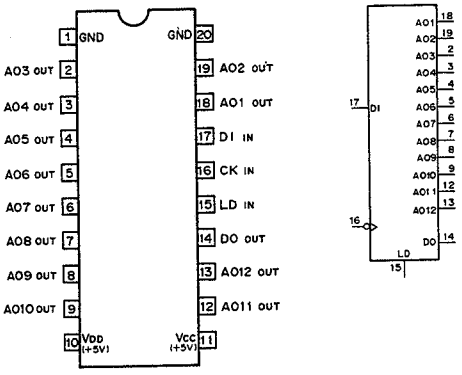

A01 – A012 : 8-BIT D/A OUTPUTS
CK : CLOCK INPUT
DI : SERIAL DATA INPUT
DO : DATA OUTPUT
LD : DATA LOAD CONTROL INPUT (H : LOAD)

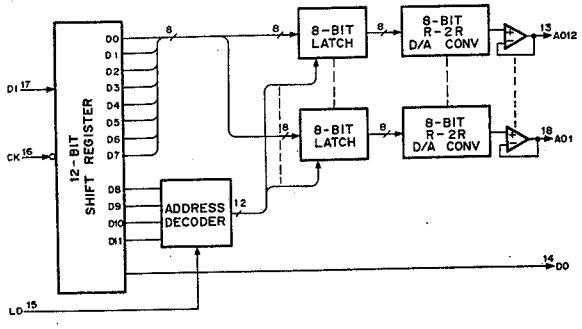

MC14495P1 (MOTOROLA)

C-MOS BCD-TO-SEVEN-SEGMENT 4-BIT LATCH/DECODER DRIVER
– TOP VIEW –

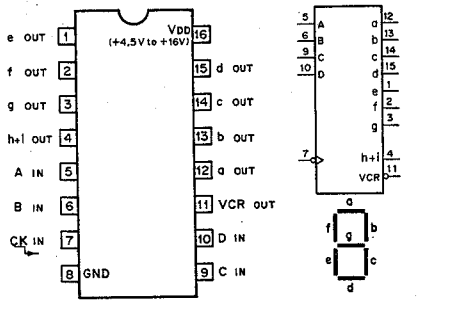

INPUTS					OUTPUTS								DISPLAY
CK	D	C	B	A	a	b	c	d	e	f	g	h+I	VCR	
0	0	0	0	0	1	1	1	1	1	1	0	0	Z	0
0	0	0	0	1	0	1	1	0	0	0	0	0	Z	1
0	0	0	1	0	1	1	0	1	1	0	1	0	Z	2
0	0	0	1	1	1	1	1	1	0	0	1	0	Z	3
0	0	1	0	0	0	1	1	0	0	1	1	0	Z	4
0	0	1	0	1	1	0	1	1	0	1	1	0	Z	5
0	0	1	1	0	1	0	1	1	1	1	1	0	Z	6
0	0	1	1	1	1	1	1	0	0	0	0	0	Z	7
0	1	0	0	0	1	1	1	1	1	1	1	0	Z	8
0	1	0	0	1	1	1	1	1	0	1	1	0	Z	9
0	1	0	1	0	1	1	1	0	1	1	1	0	Z	A
0	1	0	1	1	0	0	1	1	1	1	1	0	Z	b
0	1	1	0	0	1	0	0	1	1	1	0	0	Z	C
0	1	1	0	1	0	1	1	1	1	0	1	0	Z	d
0	1	1	1	0	1	0	0	1	1	1	1	0	Z	E
0	1	1	1	1	1	0	0	0	1	1	1	0	Z	F
↓	X	X	X	X	X	X	X	X	X	X	X	X	Z/O	DATA LATCH
1	X	X	X	X	X	X	X	X	X	X	X	X	Z/O	DATA HOLD

0 : LOW LEVEL
1 : HIGH LEVEL
X : DON'T CARE
Z : HIGH IMPEDANCE

MB89322APFQ (FUJITSU) FLAT PACKAGE

C-MOS PROGRAMMABLE CRT (CATHODE-RAY TUBE) CONTROLLER
– TOP VIEW –

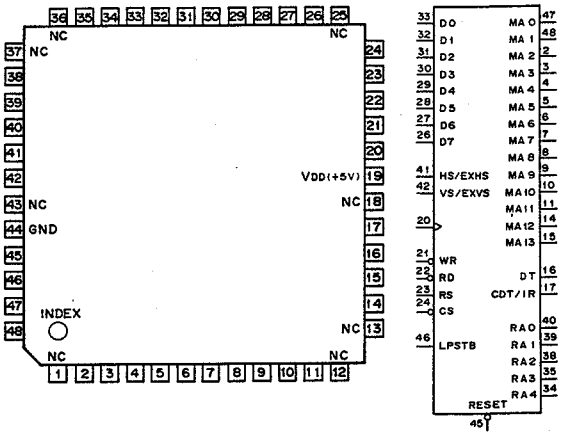

PIN No.	I/O	SIGNAL	PIN No.	I/O	SIGANL	PIN No.	I/O	SIGNAL	PIN No.	I/O	SIGNAL
1	–	NC	13	–	NC	25	–	NC	37	–	NC
2	O	MA2	14	O	MA12	26	I/O	D7	38	O	RA2
3	O	MA3	15	O	MA13	27	I/O	D6	39	O	RA1
4	O	MA4	16	O	DT	28	I/O	D5	40	O	RA0
5	O	MA5	17	O	CDT/IR	29	I/O	D4	41	I/O	HS/EXHS
6	O	MA6	18	–	NC	30	I/O	D3	42	I/O	VS/EXVS
7	O	MA7	19	–	VDD (+5V)	31	I/O	D2	43	–	NC
8	O	MA8	20	I	CK	32	I/O	D1	44	–	GND
9	O	MA9	21	I	WR	33	I/O	D0	45	I	RESET
10	O	MA10	22	I	RD	34	O	RA4	46	I	LPSTB
11	O	MA11	23	I	RS	35	O	RA3	47	O	MA0
12	–	NC	24	I	CS	36	–	NC	48	O	MA1

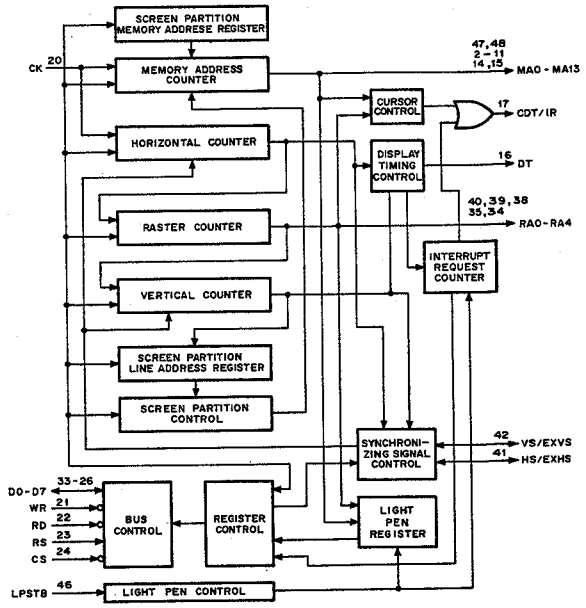

INPUT
CK : CLOCK
CS : CHIP SELECT
LPSTB : LIGHT PEN STROBE
RD : READ
RESET : RESET INPUT
RS : REGISTER SELECT
WR : WRITE

OUTPUT
CDT/IR : CURSOR DISPLAY TIMING/ INTERRUPT REQUEST
DT : DISPLAY TIMING
MA0 – MA13 : MEMORY ADDRESS
RA0 – RA4 : RASTER ADDRESS

INPUT/OUTPUT
D0 – D7 : DATA BUS
HS/EXHS : H SYNC OUT/EXTERNAL H SYNC IN
VS/EXVS : V SYNC OUT/EXTERNAL V SYNC IN

MB89394-PF (FUJITSU) FLAT PACKAGE

C-MOS ENCAPSULATED PERIPHERAL PROCESSOR

– TOP VIEW –

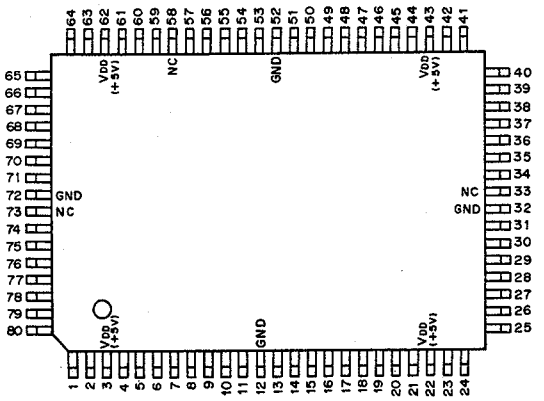

PIN No.	I/O	SIGNAL	PIN No.	I/O	SIGNAL	PIN No.	I/O	SIGNAL	PIN No.	I/O	SIGNAL
1	I	GATE0	21	I	CS0	41	I	IRQ13	61	O	DTR
2	I	CLK0	22	–	VDD	42	I	IRQ12	62	–	VDD
3	–	VDD	23	I/O	C12	43	–	VDD	63	O	RTS
4	I/O	DB7	24	I/O	C02	44	I	IRQ11	64	I	DSR
5	I/O	DB6	25	I/O	C11	45	I	IRQ10	65	I	RST
6	I/O	DB5	26	I/O	C01	46	I	IRQ07	66	O	TRNDT
7	I/O	DB4	27	I/O	C10	47	I	IRQ06	67	O	TRNEMP/STI
8	I/O	DB3	28	I/O	C00	48	I	IRQ05	68	I	CTS
9	I/O	DB2	29	I	INTA1	49	I	IRQ04	69	I/O	SYNC/BRK
10	I/O	DB1	30	I	INTA0	50	I	IRQ03	70	O	TRNRDY
11	I/O	DB0	31	O	INT1	51	I	IRQ02	71	I	CK
12	–	GND	32	–	GND	52	–	GND	72	–	GND
13	I	A1	33	–	NC	53	I	IRQ01	73	–	NC
14	I	A0	34	O	INT0	54	I	IRQ00	74	O	OUT2
15	I	W	35	I/O	SLCT1	55	I	RSLCT	75	I	GATE2
16	I	R	36	I/O	SLCT0	56	I	RCVDT	76	I	CLK2
17	I	CS4	37	I	IRQ17	57	I	TRNCLK	77	O	OUT1
18	I	CS3	38	I	IRQ16	58	–	NC	78	I	GATE1
19	I	CS2	39	I	IRQ15	59	O	RCVRDY	79	I	CLK1
20	I	CS1	40	I	IRQ14	60	I	RCVCLK	80	O	OUT0

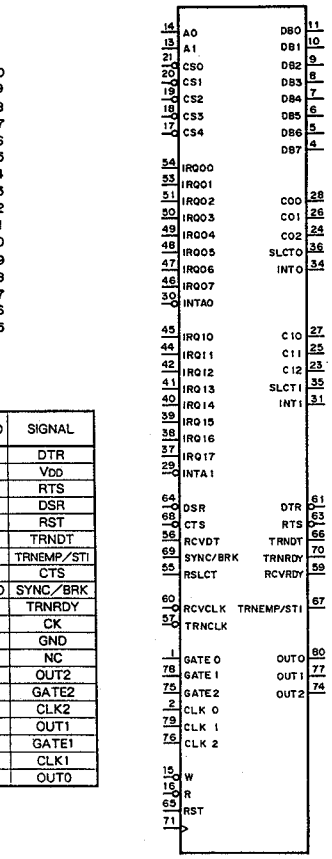

A0, A1	; ADDRESS BUS
C00 – C02	; CASCADE CONTROL
CLK0 – CLK2	; CLOCK IN
CK	; CLOCK FOR REFERANCE OF TIMING
CS0 – CS4	; CHIP SELECT
CTS	; CLEAR TO SEND
DB0 – DB7	; DATA BUS
DSR	; DATA SET READY
DTR	; DATA TERMINAL READY
GATE0 – GATE2	; GATE IN
INT0, INT1	; INTERRUPT
INTA0, INTA1	; INTERRUPT ACKNOWLEDGE
IRQ00 – IRQ07	; INTERRUPT REQUESTS
IRQ10 – IRQ17	; INTERRUPT REQUESTS
OUT1 – OUT2	; COUNT OUT
R	; READ
RCVCLK	; RECEIVER CLOCK
RCVDT	; RECEIVE DATA
RCVRDT	; RECEIVER READY
RSLCT	; REGISTER SELECT
RST	; RESET
RTS	; REQUEST TO SEND
SLCT0, SLCT1	; SELECT
SYNC/BRK	; SYNCHRONIZATION CHARACTOR/ BREAK CODE DETECT
TRNCLK	; TRANSMIT CLOCK
TRNDT	; TRANSMIT DATA
TRNEMP/STI	; TRANSMITTER EMPTY/BAUD RATE CLOCK OUT
TRNRDT	; TRANSMIT READY
W	; WRITE

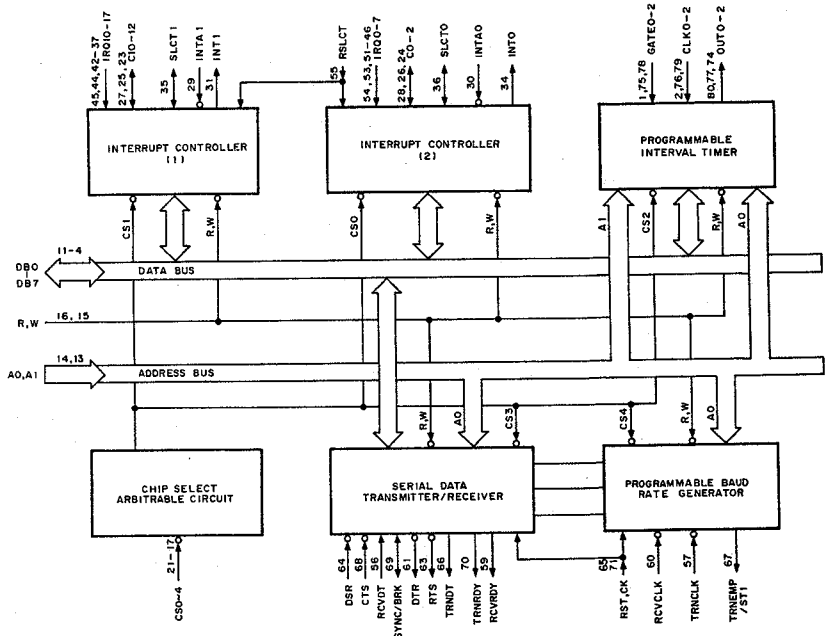

MC10125L (MOTOROLA)
MC10H125M (MOTOROLA) FLAT PACKAGE
ECL ECL-TO-TTL TRANSLATOR
– TOP VIEW –

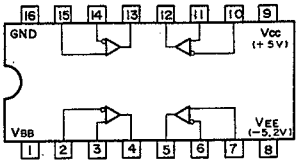

MC10H124M (MOTOROLA) FLAT PACKAGE
ECL TTL-TO-ECL TRANSLATOR
– TOP VIEW –

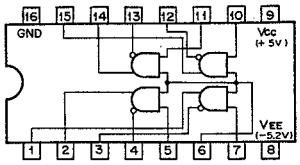

MC74HC589F (MOTOROLA) FLAT PACKAGE
C-MOS 8-BIT SERIAL OR PARALLEL INPUT/SERIAL OUTPUT
SHIFT REGISTER WITH 3-STATE OUTPUT
– TOP VIEW –

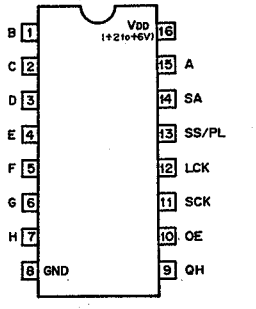

A–F: PARALLEL DATA INPUTS
LCK: LATCH CLOCK INPUT
OE: OUTPUT ENABLE INPUT
QH: SERIAL DATA OUTPUT
SA: SERIAL DATA INPUT
SCK: SHIFT CLOCK INPUT
SS/PL: SERIAL SHIFT/PARALLEL LOAD

FUNCTION TABLE

INPUTS						OUTPUT	RESULTING FUNCTION
OUTPUT ENABLE	SERIAL SHIFT PARALLEL LOAD	LATCH CLOCK	SHIFT CLOCK	SA	A–H	QH	
H	X	X	X	X	X	Z	QH is in the high impedance state
L	H	↗	L,H,↓	X	a–h	no change	Parallel Data is stored in the input latch. The state of the shift register is unaffected
L	L	↗	X	X	a–h	h	Parallel Data is stored in the input latch and loaded into the shift register
L	L	L,H,↓	L,H,↓	X	X	hL*	Parallel Data stored in the input latch is loaded into the shift register.
L L	H H	X X	↗ ↗	L H	X X	QGN QGN	A low logic level is shifted into the shift register A high logic level is shifted into the shift register
L	H	↗	↗	L,H	L,H	QGN	Serial Data is shifted into the shift register and parallel Data is stored in the input latch.

* hL = the data stored in stage H of the input latch
X = don't care
QGN = Data shifted from stage G
a–h = Data at inputs A–H, respectively
Z = High impedance State

BLOCK DIAGRAM

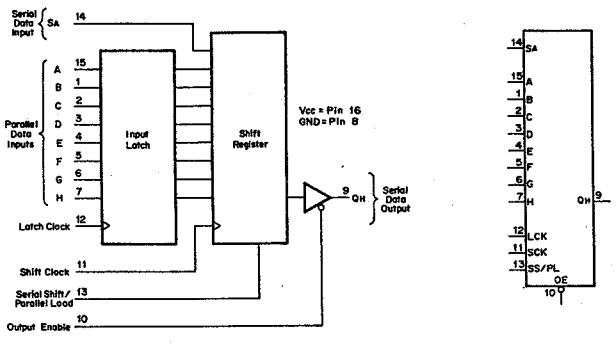

MC34051P (MOTOROLA)
RS-422 DRIVER/RECEIVER
– TOP VIEW –

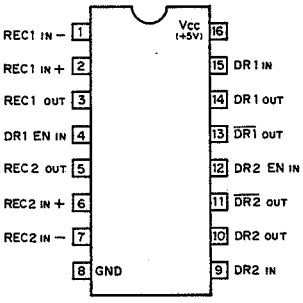

DR EN	MODE
0	DISABLE
1	ENABLE

0 ; LOW LEVEL
1 ; HIGH LEVEL

DR ; DRIVER
DR EN ; DRIVER ENABLE
REC ; RECEIVER

DRIVER CIRCUIT

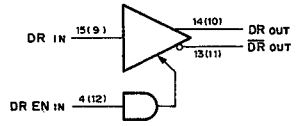

RECEIVER CIRCUIT

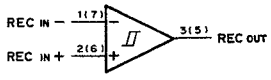

MC74HC595AF (MOTOROLA) FLAT PACKAGE
TC74HC595AF (TOSHIBA) FLAT PACKAGE
C-MOS 8-BIT SERIAL-INPUT/SERIAL- OR PARALLEL-OUTPUT
SHIFT REGISTER WITH LATCHED 3-STATE OUTPUT
– TOP VIEW –

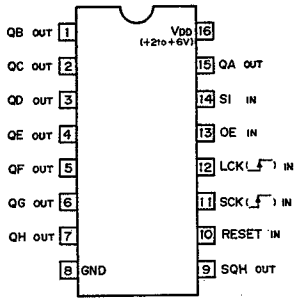

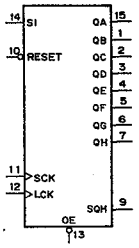

OE ; OUTPUT ENABLE INPUT
LCK ; LATCH CLOCK INPUT
SCK ; SHIFT CLOCK INPUT
RESET ; SHIFT-REGISTER RESET INPUT
SI ; SERIAL IN
QA–QH ; PARALLEL OUTPUTS
SQH ; SERIAL OUT

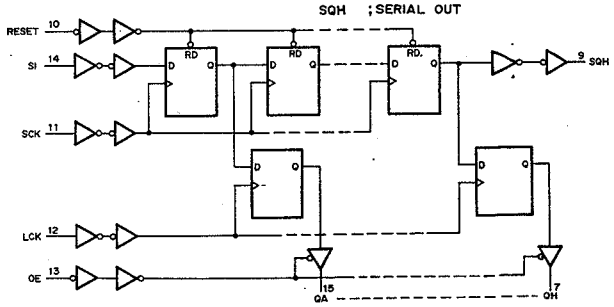

MC68882RC25 (MOTOROLA) (CLOCK FREQUENCY : 25MHz)

C-MOS FLOATING POINT COPROCESSOR

– BOTTOM VIEW –

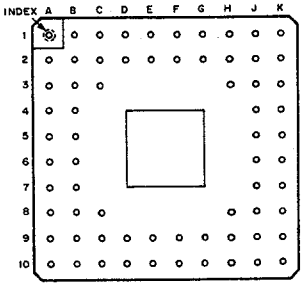

V_{DD} = +5V

PIN No.	I/O	SIGNAL	PIN No.	I/O	SIGNAL	PIN No.	I/O	SIGNAL	PIN No.	I/O	SIGNAL
1A	–	V_{DD}	2H	I	A2	6A	I/O	D4	9D	I/O	D12
1B	–	V_{DD}	2J	–	V_{DD}	6B	I/O	D5	9E	–	V_{DD}
1C	–	GND	2K	I	R/$\overline{W}$	6J	I/O	D28	9F	I/O	D17
1D	I	RESET	3A	I/O	D0	6K	I/O	D29	9G	I/O	D20
1E	–	NC	3B	–	GND	7A	I/O	D6	9H	–	GND
1F	I	SIZE	3C	–	GND	7B	–	GND	9J	I/O	D23
1G	I	DS	3H	I	A0	7J	I/O	D25	9K	I/O	D24
1H	I	AS	3J	I	CS	7K	I/O	D27	10A	–	GND
1J	I	A3	3K	–	GND	8A	I/O	D7	10B	I/O	D11
1K	I	A1	4A	I/O	D1	8B	–	V_{DD}	10C	I/O	D14
2A	–	GND	4B	I/O	SENSE	8C	I/O	D9	10D	I/O	D15
2B	–	GND	4J	O	DSACK0	8H	–	V_{DD}	10E	–	GND
2C	I	CK	4K	O	DSACK1	8J	–	GND	10F	I/O	D16
2D	–	GND	5A	I/O	D3	8K	I/O	D26	10G	I/O	D18
2E	–	V_{DD}	5B	I/O	D2	9A	I/O	D8	10H	I/O	D19
2F	–	GND	5J	I/O	D31	9B	I/O	D10	10J	I/O	D21
2G	I	A4	5K	I/O	D30	9C	I/O	D13	10K	I/O	D22

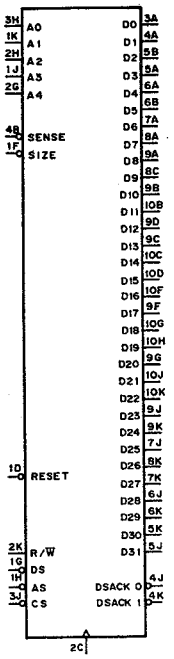

INPUT

A0 – A4	: ADDRESS
AS	: ADDRESS STROBE
CK	: CLOCK
CS	: CHIP SELECT
DS	: DATA STROBE
R/$\overline{W}$	: READ/WRITE
RESET	: RESET
SENSE	: SENSE DEVICE
SIZE	: SIZE

OUTPUT

DSACK0,
DSACK1 : DATA TRANSFER AND SIZE ACKNOWLEDGE

INPUT/OUTPUT

D0 – D31 ; DATA INPUTS/OUTPUTS

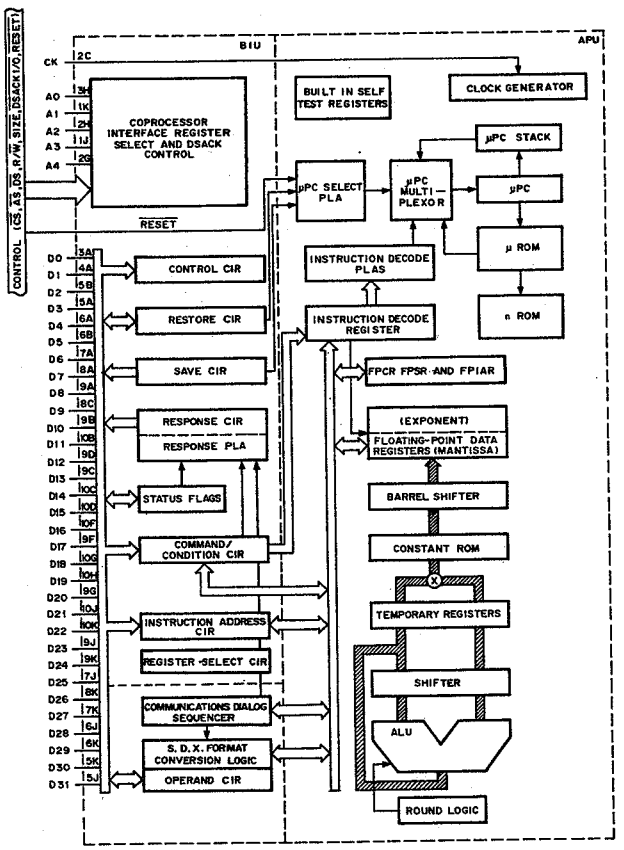

MN6557AS (MATSUSHITA) FLAT PACKAGE

C-MOS 10-BIT D/A CONVERTER FOR IMAGE PROCESSING

– TOP VIEW –

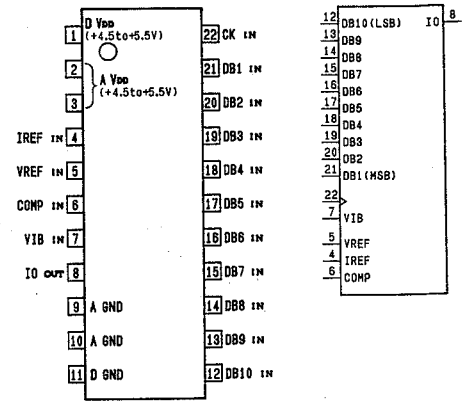

CK	: CLOCK IN
COMP	: PHASE COMPARATOR IN
DB1-DB10	: DATA BUS IN
IO	: ANALOG OUT
IREF	: REFERENCE CURRENT IN
VIB	: CAPACITOR CONNECT
VREF	: REFERENCE VOLTAGE IN

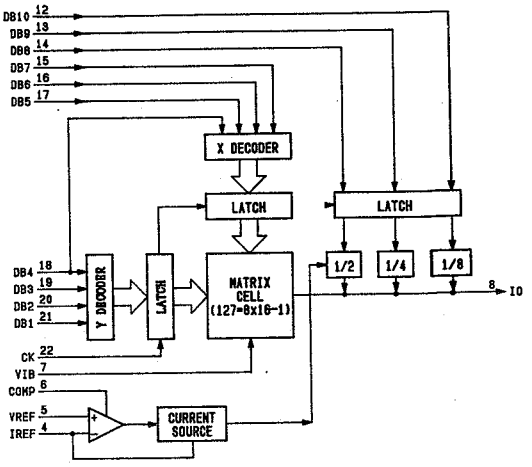

MSM514221A-4RS (OKI)

C-MOS 1M (262263x4)-BIT DYNAMIC SERIAL ACCESS MEMORY
– TOP VIEW –

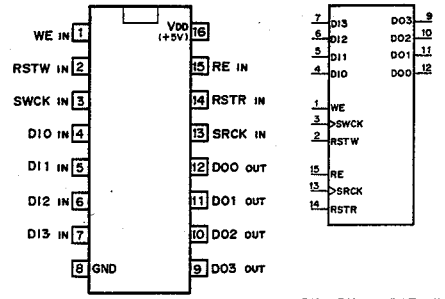

DI0 – DI3 : DATA INPUTS
DO0 – DO3 : DATA OUTPUTS
RE : READ ENABLE INPUT
RSTR : READ RESET INPUT
RSTW : WRITE RESET INPUT
SRCK : READ CLOCK INPUT
SWCK : WRITE CLOCK INPUT
WE : WRITE ENABLE INPUT

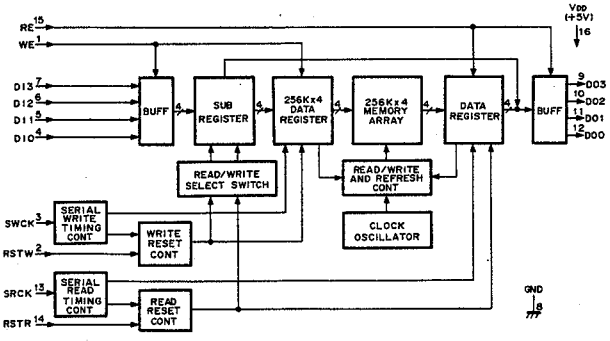

SBX1601A (SONY)

8- OR 10-BIT PARALLEL-TO-SERIAL CONVERTER
– BOTTOM VIEW –

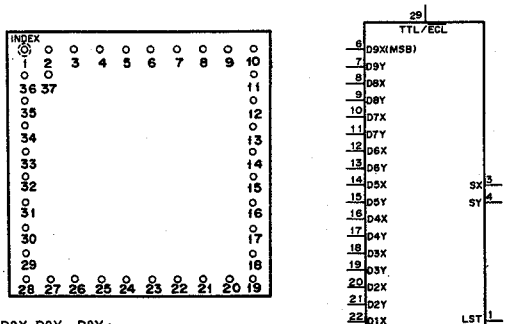

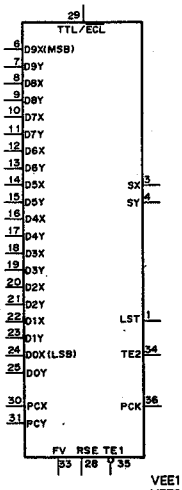

INPUT
D9X – D0X, D9Y – D0Y :
PARALLEL DATA INPUTS
PCX, PCY : PARALLEL CLOCK INPUTS
FV : VCO FREQ. ADJ. INPUT
RSE : VCO RANGE SELECT INPUT (H : HIGH RANGE)
TE1 : TEST TERMINAL (LOW = TEST)
TTL/ECL : VCC FOR INPUT LEVEL SELECT
(+5V = TTL, GND = ECL)

OUTPUT
LST : PLL LOCK DETECT OUTPUT (H : LOCK)
PCK : PARALLEL CLOCK OUTPUT
SX, SY : SERIAL DATA OUTPUTS
TE2 : TEST TERMINAL

VEE1 = – 5V
VEE2 = – 3.5V

PIN NO.	I/O	SIGNAL	PIN NO.	I/O	SIGNAL	PIN NO.	I/O	SIGNAL	PIN NO.	I/O	SIGNAL
1	O	LST	11	I	D7Y	21	I	D2Y	31	I	PCY
2	–	GND	12	I	D6X	22	I	D1X	32	–	GND
3	O	SX	13	I	D6Y	23	I	D1Y	33	I	FV
4	O	SY	14	I	D5X	24	I	D0X(LSB)	34	O	TE2
5	–	GND	15	I	D5Y	25	I	D0Y	35	I	TE1
6	I	D9X(MSB)	16	I	D4X	26	–	VEE1	36	O	PCK
7	I	D9Y	17	I	D4Y	27	–	VEE2	37	–	NC
8	I	D8X	18	I	D3X	28	I	RSE			
9	I	D8Y	19	I	D3Y	29	–	TTL/ECL			
10	I	D7X	20	I	D2X	30	I	PCX			

RTC-62421B (EPSON)

C-MOS REAL TIME CLOCK
– TOP VIEW –

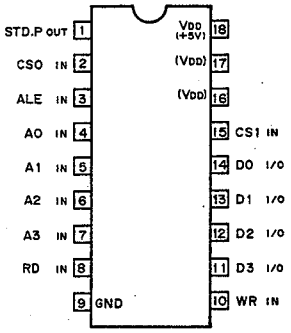

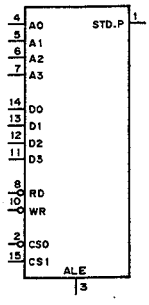

AO – A3 ; ADDRESS BUS INPUTS
ALE ; ADDRESS LATCH ENABLE INPUT
CSO, CS1 ; CHIP SELECT INPUTS
DO – D3 ; DATA BUS INPUTS/OUTPUTS
RD ; READ INPUT
STD.P ; STANDARD PULSE OUTPUT
WR ; WRITE INPUT

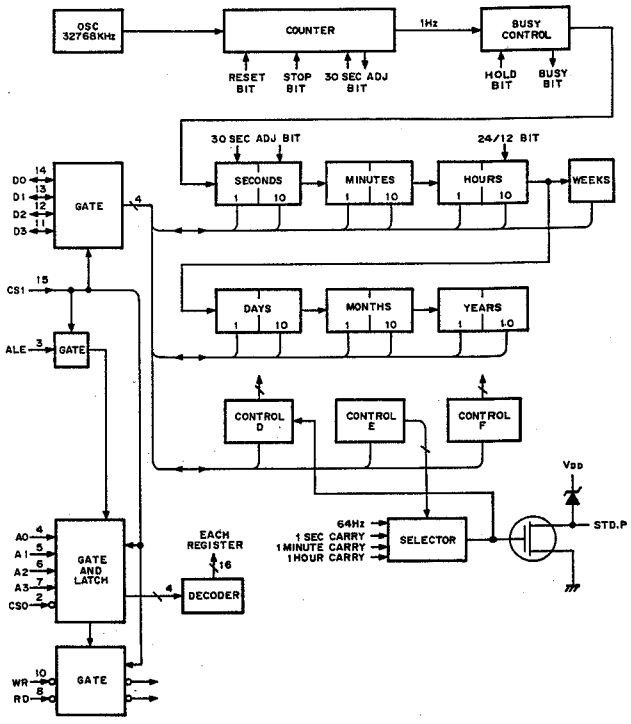

SBX1602A (SONY)

8- OR 10-BIT SERIAL-TO-PARALLEL CONVERTER
– BOTTOM VIEW –

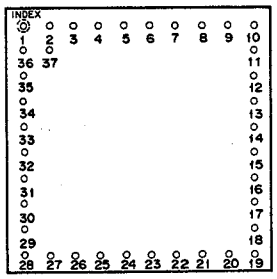

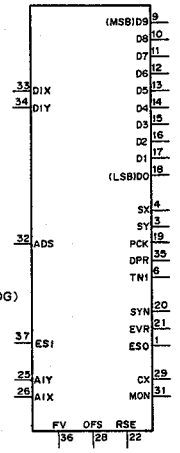

INPUT

ADS	: SERIAL DATA SELECT INPUT (H : DIGITAL, L : ANALOG)
AIX, AIY	: EQUALIZER INPUTS
DIX, DIY	: SERIAL DATA INPUTS
ESI	: PLL SIGNAL INPUT
OFS	: AGC OFFSET ADJ. INPUT
FV	: VCO FREQ. ADJ. INPUT
RSE	: VCO RANGE SELECT INPUT (H : HIGH RANGE)

OUTPUT

CX	: EQUALIZER DETECT OUTPUT (L : NO INPUT)
D9 – D0	: PARALLEL DATA OUTPUTS
DPR	: SERIAL DATA DETECT OUTPUT (L : NO INPUT)
ESO	: TEST NODE PLL ERRROR SIGNAL OUTPUT
EVR	: REFERENCE VOLTAGE FOR PARALLEL OUTPUT
MON	: EQUALIZER MONITOR OUTPUT
PCK	: PARALLEL CLOCK OUTPUT
SX, SY	: SERIAL DATA OUTPUTS
SYN	: TRS DETECT OUTPUT
TN1	: TEST TERMINAL

VEE1, 3 = – 5V
VEE2 = – 3.5V

PIN NO.	I/O	SIGNAL	PIN NO.	I/O	SIGNAL	PIN NO.	I/O	SIGNAL	PIN NO.	I/O	SIGNAL
1	O	ESO	11	O	D7	21	O	EVR	31	O	MON
2	–	GND	12	O	D6	22	I	RSE	32	I	ADS
3	O	SY	13	O	D5	23	–	VEE3	33	I	DIX
4	O	SX	14	O	D4	24	–	GND	34	I	DIY
5	–	GND	15	O	D3	25	I	AIY	35	O	DPR
6	O	TN1	16	O	D2	26	I	AIX	36	I	FV
7	–	VEE1	17	O	D1	27	–	GND	37	I	ESI
8	–	VEE2	18	O	D0(LSB)	28	I	OFS			
9	O	D9(MSB)	19	O	PCK	29	O	CX			
10	O	D8	20	O	SYN	30	–	GND			

SN74HC00ANS (TI) FLAT PACKAGE
TC74AC00F (TOSHIBA) FLAT PACKAGE

C-MOS QUAD 2-INPUT NAND GATES
– TOP VIEW –

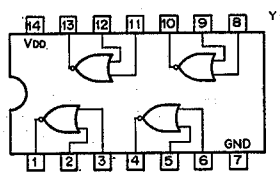

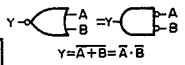

$Y=\overline{A+B}=\overline{A}\cdot\overline{B}$

A	B	Y
0	0	1
0	1	0
1	0	0
1	1	0

0:LOW LEVEL
1:HIGH LEVEL

NOTE :

TYPE	VDD
TC74AC02F	+2 to +5.5V
74ACT02SJ TC74ACT02F	+4.5 to +5.5V
OTHER TYPES	+2 to +6V

SN74HC02ANS (TI) FLAT PACKAGE
TC74AC02F (TOSHIBA) FLAT PACKAGE

C-MOS QUAD 2-INPUT NOR GATES
– TOP VIEW –

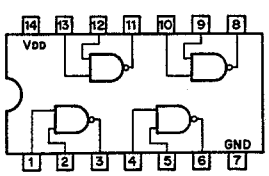

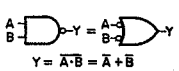

$Y=\overline{A\cdot B}=\overline{A}+\overline{B}$

A	B	Y
0	0	1
0	1	1
1	0	1
1	1	0

0;LOW LEVEL
1;HIGH LEVEL

NOTE :

TYPE	VDD
TC74AC00 TYPE	+2 to +5.5V
MC74HCT00N	+5V
74ACT00 TYPE	+4.5 to +5.5V
OTHER TYPES	+2 to +6V

SM6103S (NPC) FLAT PACKAGE

C-MOS 8-BIT A/D CONVERTOR
– TOP VIEW –

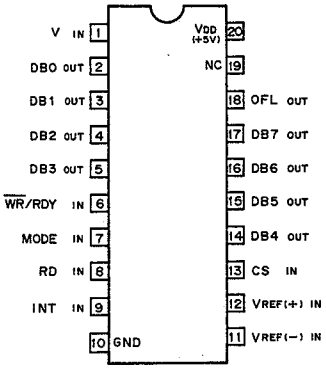

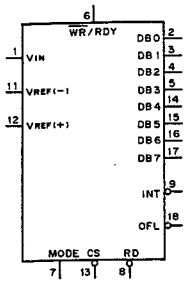

CS	; CHIP SELECT INPUT
DB0 – DB7	; DIGITAL DATA OUTPUTS
INT	; INTERRUPT OUTPUT
MODE	; MODE SELECT INPUT (WR-RD MODE/RD MODE)
OFL	; OVERFLOW OUTPUT
RD	; READ INPUT
VIN	; ANALOG VOLTAGE INPUT
VREF (+)	; TOP REFERENCE VOLTAGE INPUT
VREF (–)	; BOTTOM REFERENCE VOLTAGE INPUT
WR/RDY	; WR-RD MODE → WR INPUT RD MODE → RDY INPUT

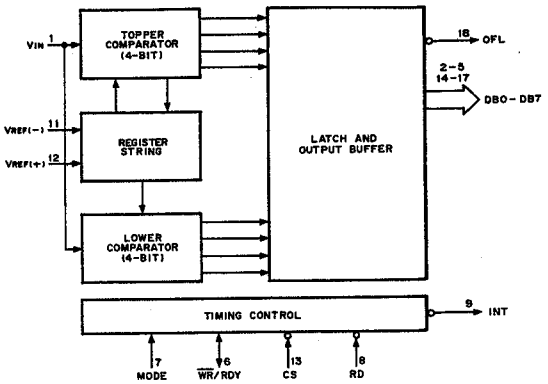

SN74HC04ANS (TI) FLAT PACKAGE
TC74AC04F (TOSHIBA) FLAT PACKAGE

C-MOS HEX INVERTERS
– TOP VIEW –

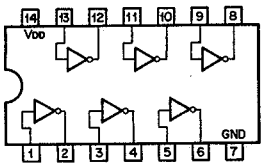

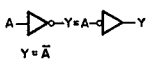

$Y=\overline{A}$

A	Y
0	1
1	0

0:LOW LEVEL
1:HIGH LEVEL

NOTE :

TYPE	VDD
74HCT04 TYPE	+5V
TC74AC04 TYPE	+2 to +5.5V
74ACT04 TYPE	+4.5 to +5.5V
OTHER TYPES	+2 to +6V

SN74HC109ANS (TI) FLAT PACKAGE

C-MOS J-K FLIP-FLOP WITH DIRECT SET/RESET

– TOP VIEW –

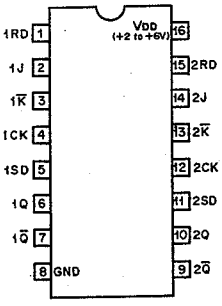

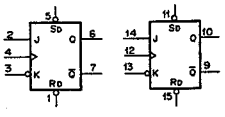

INPUTS					OUTPUTS	
Sd	Rd	CK	J	K	Qn+1	Qn+1
0	1	X	X	X	1	0
1	0	X	X	X	0	1
0	0	X	X	X	1 *	1 *
1	1	↓	0	1	Qn	Q̄n
			0	0	0	1
			1	1	1	0
			1	0	Q̄n	Qn
1	1	0	X	X	Qn	Q̄n

0; LOW LEVEL
1; HIGH LEVEL
X; DON'T CARE
*; NONSTABLE

SN74HC138ANS (TI) FLAT PACKAGE
TC74AC138F (TOSHIBA) FLAT PACKAGE

C-MOS 3-TO-8 LINE DECODER/DEMULTIPLEXER

– TOP VIEW –

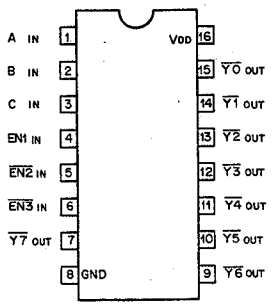

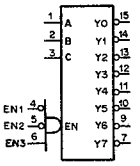

INPUTS				OUTPUTS							
EN	C	B	A	Y7	Y6	Y5	Y4	Y3	Y2	Y1	Y0
0	X	X	X	1	1	1	1	1	1	1	1
1	0	0	0	1	1	1	1	1	1	1	0
1	0	0	1	1	1	1	1	1	1	0	1
1	0	1	0	1	1	1	1	1	0	1	1
1	0	1	1	1	1	1	1	0	1	1	1
1	1	0	0	1	1	1	0	1	1	1	1
1	1	0	1	1	1	0	1	1	1	1	1
1	1	1	0	1	0	1	1	1	1	1	1
1	1	1	1	0	1	1	1	1	1	1	1

EN = EN1 · EN2 · EN3

0 ; LOW LEVEL
1 ; HIGH LEVEL
X ; DON'T CARE

NOTE :

TYPE	VDD
74HCT138 TYPE	+5V
74ACT138 TYPE	+4.5 to +5.5V
TC74AC138 TYPE	+2 to +5.5V
OTHER TYPES	+2 to +6V

SN74HC139ANS (TI) FLAT PACKAGE
SN74HCT139ANS (TI) FLAT PACKAGE
TC74AC139F (TOSHIBA) FLAT PACKAGE
TC74ACT139F (TOSHIBA) FLAT PACKAGE

C-MOS DUAL 2-TO-4 DECODER/DEMULTIPLEXER

– TOP VIEW –

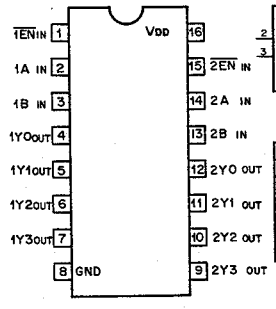

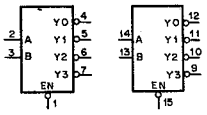

INPUTS			OUTPUTS			
EN	B	A	Y3	Y2	Y1	Y0
0	0	0	1	1	1	0
0	0	1	1	1	0	1
0	1	0	1	0	1	1
0	1	1	0	1	1	1
1	X	X	1	1	1	1

0 ; LOW LEVEL
1 ; HIGH LEVEL
X ; DON'T CARE

NOTE :

TYPE	VDD
74AC/74HC	+2 to +6V
74ACT	+5V
TC74AC139	+2 to +5.5V

SN74HC14ANS (TI) FLAT PACKAGE

C-MOS HEX SCHMITT TRIGGER INVERTERS

– TOP VIEW –

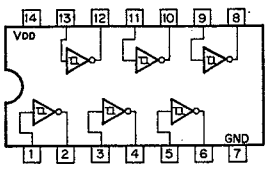

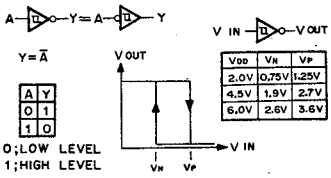

VDD	VN	VP
2.0V	0.75V	1.25V
4.5V	1.9V	2.7V
6.0V	2.6V	3.6V

NOTE :

TYPE	VDD
TC74AC14 TYPE	+2 to +5.5V
OTHER TYPES	+2 to +6V

SN74HC157ANS (TI) FLAT PACKAGE
TC74AC157F (TOSHIBA) FLAT PACKAGE
TC74ACT157F (TOSHIBA) FLAT PACKAGE

C-MOS QUAD 2-LINE-TO-1-LINE DATA SELECTOR/MULTIPLEXER

– TOP VIEW –

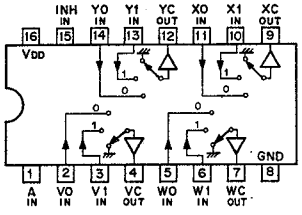

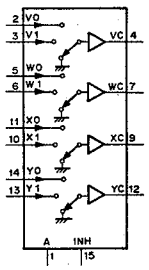

NOTE :

TYPE	VDD
74ACT157	+5V
TC74AC157P TC74AC157F	+2 to +5.5V
OTHER TYPES	+2 to +6V

0;LOW LEVEL
1;HIGH LEVEL
X;DON'T CARE

CONT. IN		ON CHANNEL
INH	A	
0	0	0
0	1	1
1	X	GND

SN74HC163ANS (TI) FLAT PACKAGE
TC74AC163F (TOSHIBA) FLAT PACKAGE

C-MOS PRESETTABLE SYNCHRONOUS 4-BIT BINARY COUNTER

– TOP VIEW –

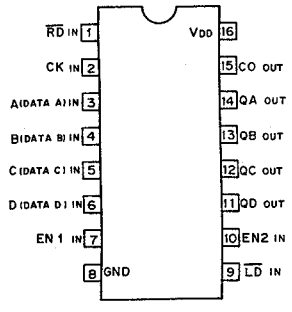

MODE SELECTION

CONTROL INPUTS				MODE
RD	LD	EN1	EN2	
0	X	X	X	RESET (SYNCHRONOUS)
1	0	X	X	PRESET (SYNCHRONOUS)
1	1	0	X	NO COUNT
1	1	X	0	NO COUNT
1	1	1	1	COUNT

CARRY OUTPUT "CO"

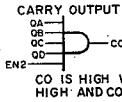

CO IS HIGH WHEN EN2 INPUT IS HIGH AND COUNT IS "15".

NOTE :

TYPE	VDD
74ACT163 TYPE	+4.5 to +5.5V
TC74AC163 TYPE	+2 to +5.5V
OTHER TYPES	+2 to +6V

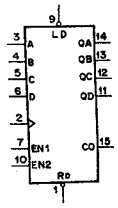

COUNT SEQUENCE

COUNT	OUTPUTS			
	QD	QC	QB	QA
0	0	0	0	0
1	0	0	0	1
2	0	0	1	0
3	0	0	1	1
4	0	1	0	0
5	0	1	0	1
6	0	1	1	0
7	0	1	1	1
8	1	0	0	0
9	1	0	0	1
10	1	0	1	0
11	1	0	1	1
12	1	1	0	0
13	1	1	0	1
14	1	1	1	0
15	1	1	1	1

SN74HC164ANS (TI) FLAT PACKAGE
TC74AC164F (TOSHIBA) FLAT PACKAGE

C-MOS 8-BIT SERIAL-IN/PARALLEL-OUT SHIFT REGISTER
– TOP VIEW –

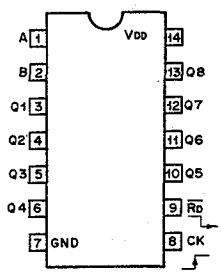

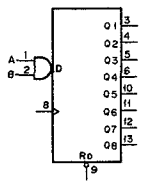

INPUTS				OUTPUTS			
Rd	CK	A	B	Q1	Q2	----	Q8
0	X	X	X	0	0	0	0
1	0	X	X	Q1o	Q2o	----	Q8o
1	↑	1	1	1	Q1n	----	Q7n
1	↑	0	X	0	Q1n	----	Q7n
1	↑	X	0	0	Q1n	----	Q7n

0;LOW LEVEL
1;HIGH LEVEL
X;DON'T CARE

NOTE :

TYPE	VDD
TC74AC164 TYPE	+2 to +5.5V
OTHER TYPES	+2 to +6V

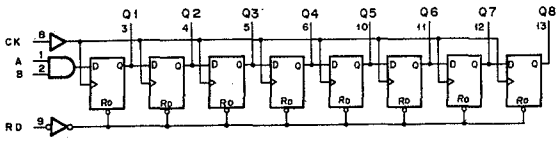

SN74HC174ANS (TI) FLAT PACKAGE
TC74AC174F (TOSHIBA) FLAT PACKAGE

C-MOS D-TYPE FLIP-FLOP WITH RESET
– TOP VIEW –

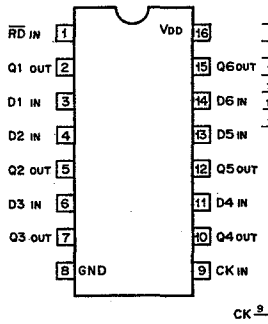

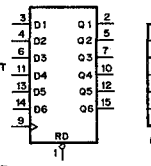

EACH FLIP-FLOP

INPUTS			OUT
RD	CK	D	Q
0	X	X	0
1	↑	0	0
1	↑	1	1
1	0	X	Qo

0;LOW LEVEL
1;HIGH LEVEL
X;DON'T CARE

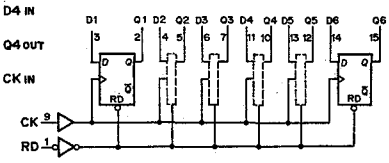

NOTE :

TYPE	VDD
74AC	+3.3 to +5V
74ACT	+5V
74HC	+2 to +6V
TC74AC174	+2 to +5.5V

SN74HC175ANS (TI) FLAT PACKAGE

C-MOS QUAD D-TYPE FLIP-FLOPS WITH RESET
– TOP VIEW –

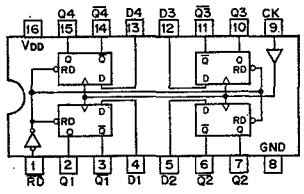

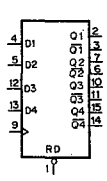

RD	CK	D	Q	$\overline{Q}$
0	X	X	0	1
1	↑	1	1	0
1	↑	0	0	1
1	0	X	Qo	$\overline{Qo}$

0 ; LOW LEVEL
1 ; HIGH LEVEL
X ; DON'T CARE
Qo ; NO CHANGE
$\overline{Qo}$; NO CHANGE

NOTE:

TYPE	VDD
TC74AC175F	+2 to +5.5V
74ACT175 TYPE	+4.5 to +5.5V
OTHER TYPES	+2 to +6V

SN74HC245ANS (TI) FLAT PACKAGE
TC74AC245F (TOSHIBA) FLAT PACKAGE
TC74AC245P (TOSHIBA)
TC74ACT245F (TOSHIBA) FLAT PACKAGE

C-MOS BILATERAL BUS TRANSCEIVERS WITH 3-STATE OUTPUTS
– TOP VIEW –

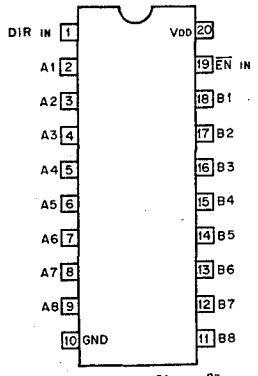

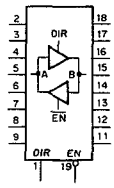

EN	DIR	OPERATION
0	0	B to A
0	1	A to B
1	X	HI-Z

0 ; LOW LEVEL
1 ; HIGH LEVEL
X ; DON'T CARE
HI-Z ; HIGH IMPEDANCE

NOTE :

TYPE	VDD
AC HC	+2 to +6V
ACT HCT	+5V
TC74AC245F TC74AC245P	+2 to +5.5V

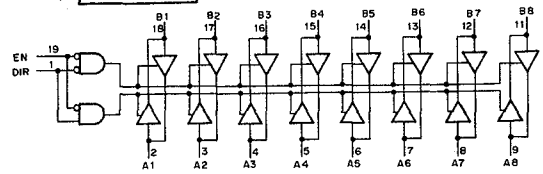

SN74HC238ANS (TI) FLAT PACKAGE

C-MOS 3-TO-8 LINE DECODER/DEMULTIPLEXER
– TOP VIEW –

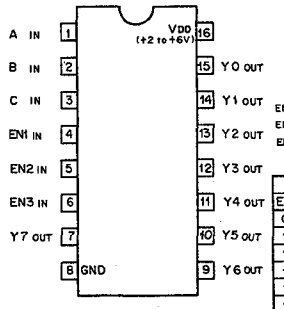

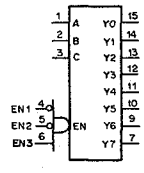

INPUT				OUTPUT							
EN	C	B	A	Y7	Y6	Y5	Y4	Y3	Y2	Y1	Y0
0	X	X	X	0	0	0	0	0	0	0	0
1	0	0	0	0	0	0	0	0	0	0	1
1	0	0	1	0	0	0	0	0	0	1	0
1	0	1	0	0	0	0	0	0	1	0	0
1	0	1	1	0	0	0	0	1	0	0	0
1	1	0	0	0	0	0	1	0	0	0	0
1	1	0	1	0	0	1	0	0	0	0	0
1	1	1	0	0	1	0	0	0	0	0	0
1	1	1	1	1	0	0	0	0	0	0	0

EN = $\overline{EN1}$ · $\overline{EN2}$ · EN3

0 ; LOW LEVEL
1 ; HIGH LEVEL
X ; DON'T CARE

SN74HC241ANS (TI)

C-MOS 3-STATE NONINVERTING BUFFER/LINE DRIVER/LINE RECEIVER
– TOP VIEW –

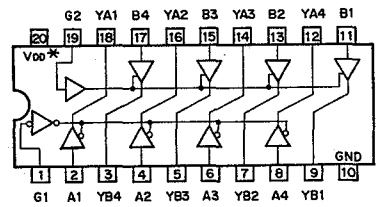

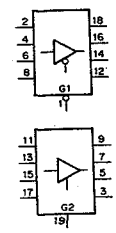

* VDD
HC;+2 to +6V
HCT;+5V

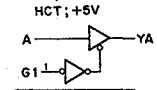

G1	A	YA
0	0	0
0	1	1
1	X	HI-Z

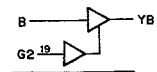

G2	B	YB
1	0	0
1	1	1
0	X	HI-Z

0;LOW LEVEL
1;HIGH LEVEL
X;DON'T CARE
HI-Z;HIGH IMPEDANCE

SN74HC251ANS (TI) FLAT PACKAGE

C-MOS 8-LINE-TO-1-LINE DATA SELECTOR/MULTIPLEXER WITH 3-STATE OUTPUT

– TOP VIEW –

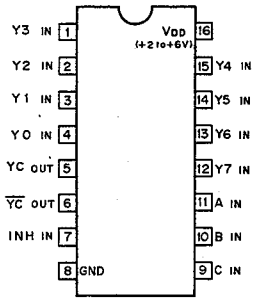

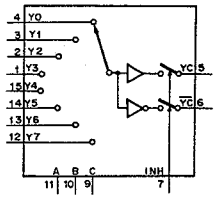

CONTROL IN				OUTPUT	
C	B	A	INH	YC	$\overline{YC}$
X	X	X	1	Hi-Z	Hi-Z
0	0	0	0	Y0	$\overline{Y0}$
0	0	1	0	Y1	$\overline{Y1}$
0	1	0	0	Y2	$\overline{Y2}$
0	1	1	0	Y3	$\overline{Y3}$
1	0	0	0	Y4	$\overline{Y4}$
1	0	1	0	Y5	$\overline{Y5}$
1	1	0	0	Y6	$\overline{Y6}$
1	1	1	0	Y7	$\overline{Y7}$

0 ; LOW LEVEL
1 ; HIGH LEVEL
HI-Z ; HIGH IMPEDANCE

SN74HC32ANS (TI) FLAT PACKAGE
TC74AC32F (TOSHIBA) FLAT PACKAGE

C-MOS QUAD 2-INPUT OR GATES

– TOP VIEW –

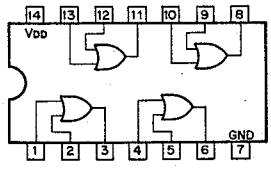

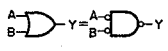

A	B	Y
0	0	0
0	1	1
1	0	1
1	1	1

0;LOW LEVEL
1;HIGH LEVEL

NOTE :

TYPE	VDD
TC74AC32 TYPE	+2 to +5.5V
OTHER TYPES	+2 to +6V

SN74HC367ANS (TI) FLAT PACKAGE
TC74AC367F (TOSHIBA) FLAT PACKAGE

C-MOS BUS DRIVER WITH 3-STATE OUTPUTS

– TOP VIEW –

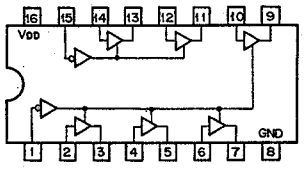

G	A	Y
0	0	0
0	1	1
1	X	HI-Z

0;LOW LEVEL
1;HIGH LEVEL
X;DON'T CARE
HI-Z;HIGH IMPEDANCE

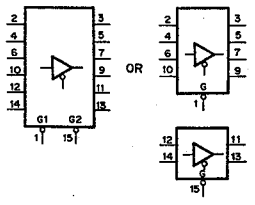

NOTE :

TYPE	VDD
TC74AC367	+ 2 to + 5.5V
OTHER TYPES	+ 2 to + 6V

SN74HC393ANS (TI) FLAT PACKAGE

C-MOS DUAL 4-BIT BINARY COUNTER

– TOP VIEW –

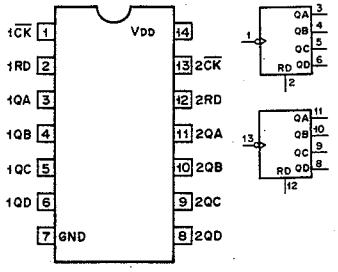

COUNT	QD	QC	QB	QA
0	0	0	0	0
1	0	0	0	1
2	0	0	1	0
3	0	0	1	1
4	0	1	0	0
5	0	1	0	1
6	0	1	1	0
7	0	1	1	1
8	1	0	0	0
9	1	0	0	1
10	1	0	1	0
11	1	0	1	1
12	1	1	0	0
13	1	1	0	1
14	1	1	1	0
15	1	1	1	1

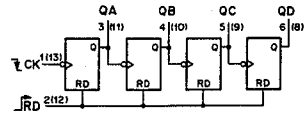

RESET/COUNT FUNCTION				
RD	QD	QC	QB	QA
1	0	0	0	0
0	COUNT			

0;LOW LEVEL
1;HIGH LEVEL

NOTE :

TYPE	VDD
74AC	+2 to 5.5V
74HC	+2 to 6V

SN74HC540ANS (TI) FLAT PACKAGE
TC74AC540F (TOSHIBA) FLAT PACKAGE

C-MOS 3-STATE INVERTING BUFFER/LINE DRIVER/LINE RECEIVER

– TOP VIEW –

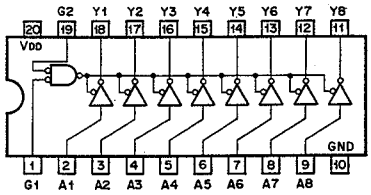

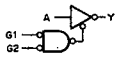

G1	G2	A	Y
0	0	0	1
0	0	1	0
1	X	X	HI-Z
X	1	X	HI-Z

0;LOW LEVEL
1;HIGH LEVEL
X;DON'T CARE
HI-Z;HIGH IMPEDANCE

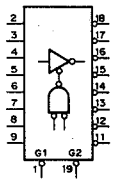

NOTE :

TYPE	VDD
ACT/HCT	+5V
TC74AC540 TYPE	+2 to +5.5V
OTHER TYPES	+2 to +6V

SN74HC541ANS (TI) FLAT PACKAGE
TC74AC541F (TOSHIBA) FLAT PACKAGE
TC74ACT541F (TOSHIBA) FLAT PACKAGE

C-MOS BUFFERS AND LINE DRIVERS WITH 3-STATE OUTPUTS

– TOP VIEW –

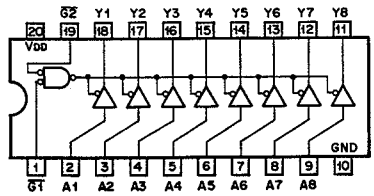

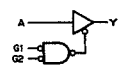

G1	G2	A	Y
0	0	0	0
0	0	1	1
1	X	X	HI-Z
X	1	X	HI-Z

0;LOW LEVEL
1;HIGH LEVEL
X;DON'T CARE
HI-Z;HIGH IMPEDANCE

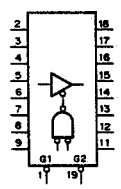

NOTE :

TYPE	VDD
AC	+2 to +5.5V
HC	+2 to +6V
ACT/BCT/HCT	+5V

SN74HC574ANS (TI) FLAT PACKAGE
SN74HCT574ANS (TI) FLAT PACKAGE
TC74AC574F (TOSHIBA) FLAT PACKAGE
TC74ACT574F (TOSHIBA) FLAT PACKAGE

C-MOS 3-STATE D-TYPE EDGE-TRIGGERED FLIP-FLOP
– TOP VIEW –

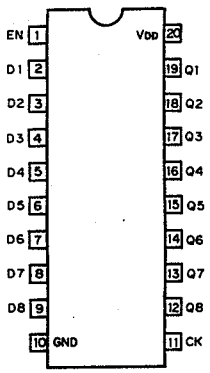

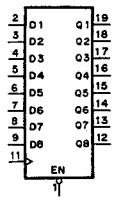

EACH FLIP-FLOP

INPUTS			OUT
EN	CK	D	Q
0	↑	1	1
0	↑	0	0
0	↓	X	Qo
1	X	X	HI-Z

0 ; LOW LEVEL
1 ; HIGH LEVEL
X ; DON'T CARE
HI-Z ; HIGH IMPEDANCE
Qo ; NO CHANGE

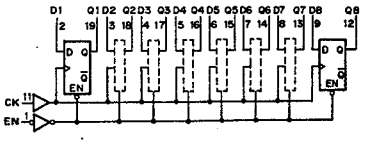

NOTE :

TYPE	VDD
74AC/74HC	+2 to +6V
74ACT/74HCT	+5V
TC74AC574F	+2 to +5.5V

SN74HC74ANS (TI) FLAT PACKAGE
TC74AC74F (TOSHIBA) FLAT PACKAGE
TC74ACT74F (TOSHIBA) FLAT PACKAGE

C-MOS DUAL D-TYPE FLIP-FLOPS WITH DIRECT SET/RESET
– TOP VIEW –

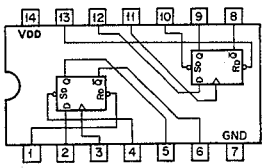

INPUTS				OUTPUTS	
S̄d	R̄d	CK	D	Qn+1	Q̄n+1
0	1	X	X	1	0
1	0	X	X	0	1
0	0	X	X	1	1
1	1	↑	1	1	0
1	1	↑	0	0	1
1	1	0	X	Qn	Q̄n

0 ; LOW LEVEL
1 ; HIGH LEVEL
X ; DON'T CARE

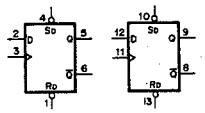

NOTE :

TYPE	VDD
TC74HCT74AF	+5V
TC74AC74 TYPE	+2 to +5.5V
74ACT74 TYPE	+4.5 to +5.5V
OTHER TYPES	+2 to +6V

SN74HC86ANS (TI) FLAT PACKAGE
TC74AC86F (TOSHIBA) FLAT PACKAGE
TC74HCT86AF (TOSHIBA) FLAT PACKAGE

C-MOS QUAD EXCLUSIVE OR GATES
– TOP VIEW –

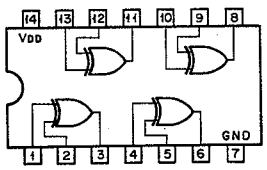

$Y = \overline{A} \cdot B + A \cdot \overline{B}$

A	B	Y
0	0	0
0	1	1
1	0	1
1	1	0

0 ; LOW LEVEL
1 ; HIGH LEVEL

NOTE :

TYPE	VDD
TC74AC86 TYPE	+2 to +5.5V
OTHER TYPES	+2 to +6V

SN74LS594N (TI)

8-BIT SHIFT REGISTER/LATCH
– TOP VIEW –

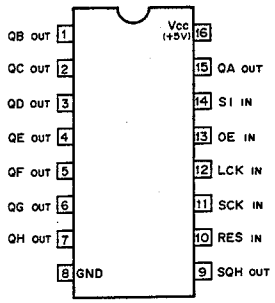

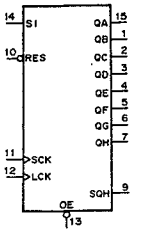

LCK ; LATCH CLOCK INPUT
OE ; OUTPUT ENABLE INPUT
QA – QH ; PARALLEL OUTPUT
RES ; SHIFT REGISTER RESET INPUT
SCK ; SHIFT CLOCK INPUT
SI ; SERIAL IN
SQH ; SERIAL OUT

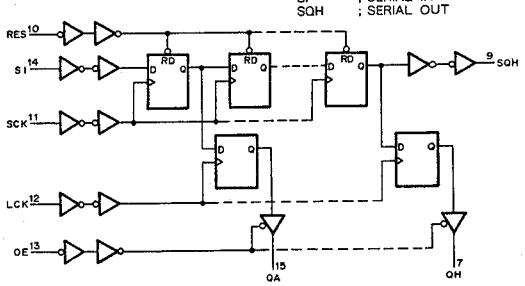

SN75ALS194N (TI)

QUAD RS-422 LINE DRIVER WITH 3-STATE OUTPUTS
– TOP VIEW –

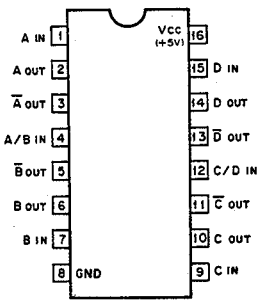

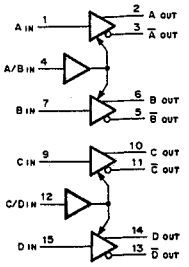

A, B, C, D IN	A/B, C/D IN	A, B, C, D OUT	Ā, B̄, C̄, D̄ OUT
0	0	0	1
1	0	1	0
X	1	HI-Z	HI-Z

0 ; LOW LEVEL
1 ; HIGH LEVEL
X ; DON'T CARE
HI-Z ; HIGH IMPEDANCE

SN75ALS195J (TI)

QUAD RS-422/423 LINE RECEIVER WITH 3-STATE OUTPUTS
– TOP VIEW –

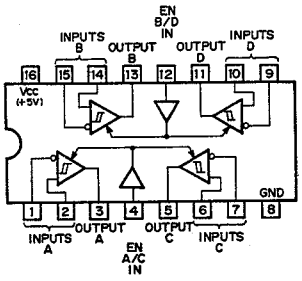

TC4S66F (TOSHIBA)

C-MOS BILATERAL ANALOG SWITCH
– TOP VIEW –

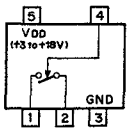

CONTROL	SWITCH
0	OFF
1	ON

0; LOW LEVEL
1; HIGH LEVEL

TC74AC08F (TOSHIBA) FLAT PACKAGE

C-MOS QUAD 2-INPUT AND GATES
– TOP VIEW –

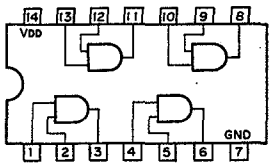

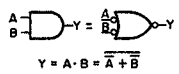

A	B	Y
0	0	0
0	1	0
1	0	0
1	1	1

0; LOW LEVEL
1; HIGH LEVEL

NOTE :

TYPE	VDD
TC74AC08F MC74ACT08M	+2 to +5.5V
OTHER TYPES	+2 to +6V

TC74AC240F (TOSHIBA) FLAT PACKAGE

C-MOS 3-STATE INVERTER/LINE DRIVER
– TOP VIEW –

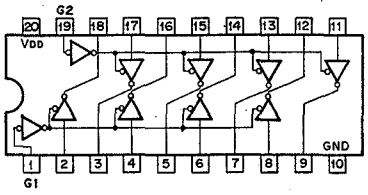

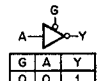

G	A	Y
0	0	1
0	1	0
1	X	HI-Z

0; LOW LEVEL
1; HIGH LEVEL
X; DON'T CARE
HI-Z; HIGH IMPEDANCE

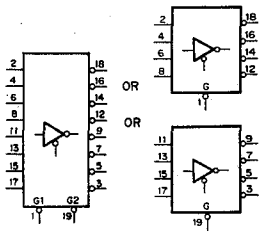

NOTE :

TYPE	VDD
74AC/74HC	+2 to +6V
74ACT/74HCT TC74BC240F TC74BC240P	+5V
TC74AC240F TC74AC240P	+2 to +5.5V

TC74HC4053AF (TOSHIBA) FLAT PACKAGE

C-MOS TRIPLE 2-CHANNEL ANALOG MULTIPLEXER/DEMULTIPLEXER
– TOP VIEW –

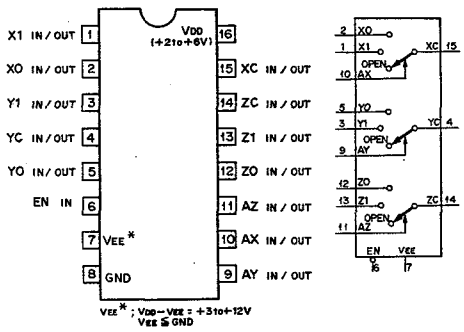

CONT. INPUTS		ON
EN	A (X,Y,Z)	CHANNEL
0	0	0
0	1	1
1	X	OPEN

0; LOW LEVEL
1; HIGH LEVEL
X; DON'T CARE.

TC74AC299F (TOSHIBA) FLAT PACKAGE

C-MOS 8-BIT UNIVERSAL SHIFT/STORAGE REGISTER
– TOP VIEW –

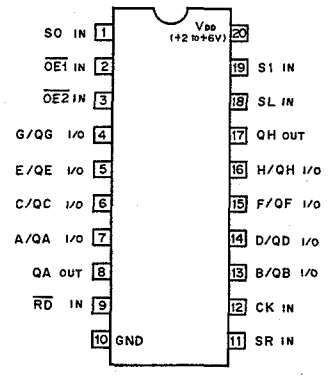

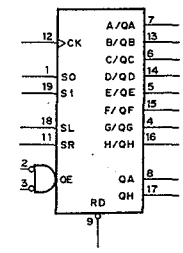

SO ; FUNCTION SELECT 0
S1 ; FUNCTION SELECT 1
SL ; SHIFT LEFT
SR ; SHIFT RIGHT
OE1, OE2 ; OUTPUT ENABLE

MODE	INPUTS								INPUTS/OUTPUTS								OUTPUTS	
			FUNCTION		ENABLE		SHIFT		A	B	C	D	E	F	G	H		
	RD	CK	SO	S1	OE1	OE2	SL	SR	QA	QB	QC	QD	QE	QF	QG	QH	QA	QH
CLEAR	0	X	0	X	0	0	X	X	0	0	0	0	0	0	0	0	0	0
	0	X	X	0	0	0	X	X	0	0	0	0	0	0	0	0	0	0
HOLD	1	X	0	0	0	0	X	X	QAo	QBo	QCo	QDo	QEo	QFo	QGo	QHo	QAo	QHo
	1	0	X	X	0	0	X	X	QAo	QBo	QCo	QDo	QEo	QFo	QGo	QHo	QAo	QHo
SHIFT RIGHT	1	↑	1	0	0	0	X	1	1	QAn	QBn	QCn	QDn	QEn	QFn	QGn	1	QGn
	1	↑	1	0	0	0	X	0	0	QAn	QBn	QCn	QDn	QEn	QFn	QGn	0	QGn
SHIFT LEFT	1	↑	0	1	0	0	1	X	QBn	QCn	QDn	QEn	QFn	QGn	QHn	1	QBn	1
	1	↑	0	1	0	0	0	X	QBn	QCn	QDn	QEn	QFn	QGn	QHn	0	QBn	0
LOAD	1	↑	1	1	X	X	X	X	a	b	c	d	e	f	g	h	a	h
OUTPUT ENABLE	X	X	X	X	1	X	X	X	HIGH-IMPEDANCE (INTERNAL LOGIC IS NOT AFFECTED)								QA	QH
	X	X	X	X	X	1	X	X									QA	QH

a---h=The level of the steady-state input at inputs A through H respectively.
0 ; LOW LEVEL
1 ; HIGH LEVEL
X ; DON'T CARE

TC74AC564F (TOSHIBA) FLAT PACKAGE

C-MOS D-TYPE FLIP-FLOPS WITH 3-STATE OUTPUTS
– TOP VIEW –

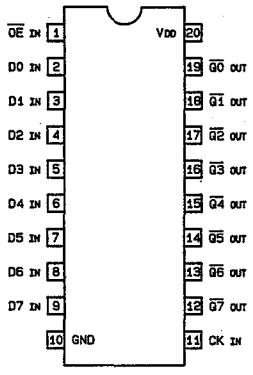

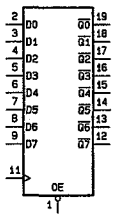

OE	CK	D	Q
1	X	X	HI-Z
0	↑	X	Qn
0	↓	0	1
0	↓	1	0

0 ; LOW LEVEL
1 ; HIGH LEVEL
X ; DON'T CARE
HI-Z ; HIGH IMPEDANCE
Qn ; NO CHANGE

NOTE :

TYPE	VDD
74HC	+2 to +6V
74HCT	+5V
74AC	+2 to +5.5V

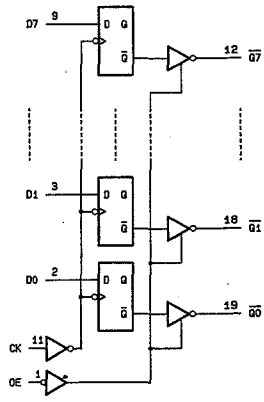

TC74HC123AF (TOSHIBA) FLAT PACKAGE

C-MOS DUAL RETRIGGERABLE MONOSTABLE MULTIVIBRATORS
– TOP VIEW –

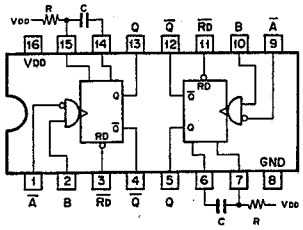

INPUT			OUTPUT	
RD	A	B	Q	Q̄
0	X	X	0	1
1	1	X	0	1
1	X	0	0	1
1	0	↑	⊓	⊔
1	↓	1	⊓	⊔
↑	0	1	⊓	⊔

0 ; LOW LEVEL
1 ; HIGH LEVEL
X ; DON'T CARE

OUTPUT PULSE WIDTH = 0.46CR

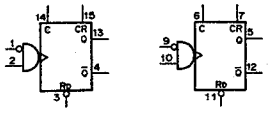

NOTE :

TYPE	VDD
TC74HCT123AF	+5V
OTHER TYPES	+2 to +6V

TC74HC4051AF (MOTOROLA) FLAT PACKAGE

C-MOS 8-CHANNEL ANALOG MULTIPLEXER/DEMULTIPLEXER
– TOP VIEW –

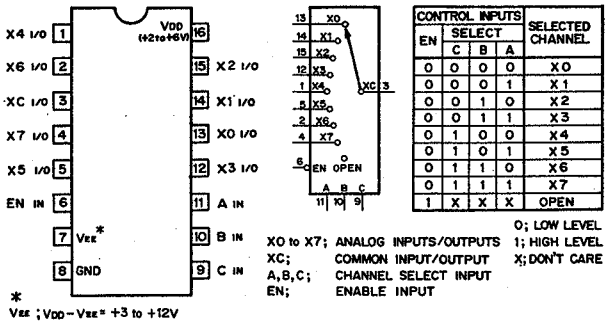

CONTROL INPUTS				SELECTED CHANNEL
EN	SELECT C	SELECT B	SELECT A	
0	0	0	0	X0
0	0	0	1	X1
0	0	1	0	X2
0	0	1	1	X3
0	1	0	0	X4
0	1	0	1	X5
0	1	1	0	X6
0	1	1	1	X7
1	X	X	X	OPEN

0; LOW LEVEL
1; HIGH LEVEL
X; DON'T CARE

* VEE ; VDD – VEE = +3 to +12V

XO to X7; ANALOG INPUTS/OUTPUTS
XC; COMMON INPUT/OUTPUT
A,B,C; CHANNEL SELECT INPUT
EN; ENABLE INPUT

TC7S32F (TOSHIBA) FLAT PACKAGE

C-MOS 2-INPUT OR GATE
– TOP VIEW –

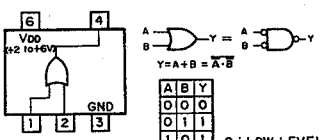

A	B	Y
0	0	0
0	1	1
1	0	1
1	1	1

0 ; LOW LEVEL
1 ; HIGH LEVEL

TC7SU04F (TOSHIBA) FLAT PACKAGE

C-MOS INVERTER
– TOP VIEW –

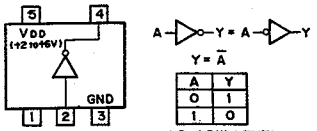

A	Y
0	1
1	0

0; LOW LEVEL
1; HIGH LEVEL

TD62083F (TOSHIBA) FLAT PACKAGE

DARLINGTON DRIVER
– TOP VIEW –

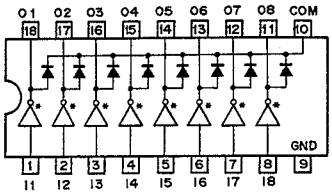

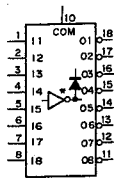

* ; OPEN COLLECTOR

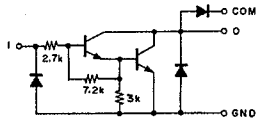

TD62783F (TOSHIBA) FLAT PACKAGE

OCTAL DRIVER
– TOP VIEW –

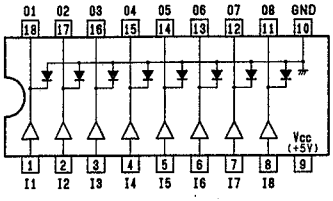

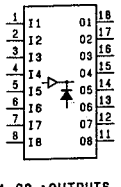

O1–O8 ; OUTPUTS
I1–I8 ; INPUTS

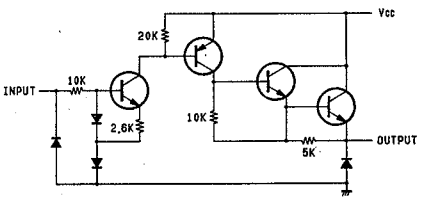

TL082CPS (TI) FLAT PACKAGE

OPERATIONAL AMPLIFIER
(JFET INPUT)
– TOP VIEW –

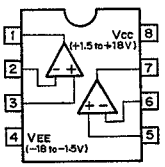

TL084CNS (TI) FLAT PACKAGE

OPERATIONAL AMPLIFIER
(J FET-INPUT)
– TOP VIEW –

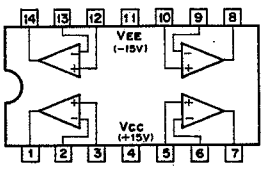

TL431CLP (TI)
ADJUSTABLE PRECISION SHUNT REGULATOR

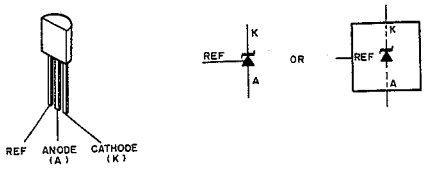

TLC372CPS (TI) FLAT PACKAGE
C-MOS COMPARATOR
– TOP VIEW –

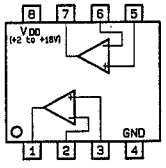

UPD28C64C-20 (NEC)
C-MOS 64K (8Kx8) ELECTRICALLY ERASABLE PROM
– TOP VIEW –

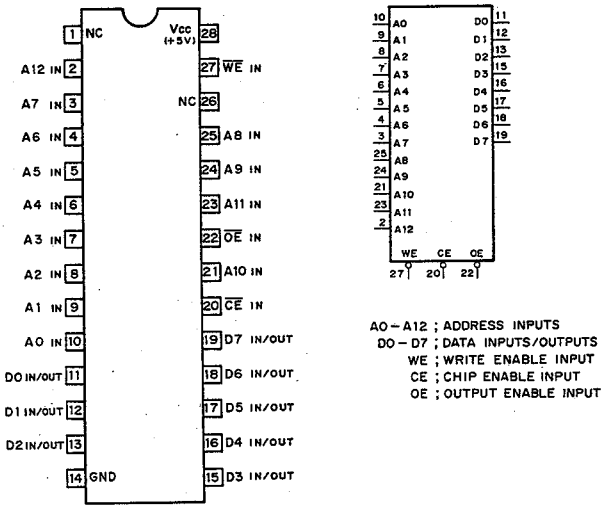

A0 – A12 ; ADDRESS INPUTS
DO – D7 ; DATA INPUTS/OUTPUTS
WE ; WRITE ENABLE INPUT
CE ; CHIP ENABLE INPUT
OE ; OUTPUT ENABLE INPUT

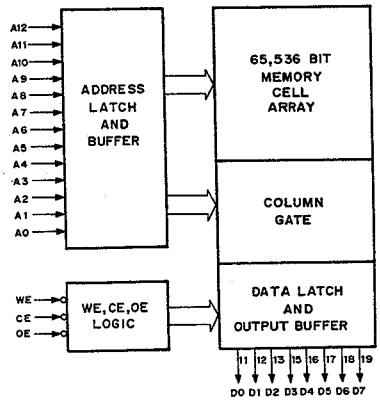

UPC4558G2 (NEC) FLAT PACKAGE
DUAL OPERATIONAL AMPLIFIER
– TOP VIEW –

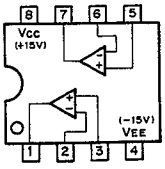

UPD431000AGW-70L (NEC) FLAT PACKAGE
C-MOS 1M (128Kx8)-BIT STATIC RAM
– TOP VIEW –

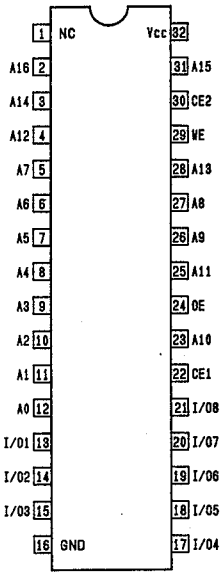

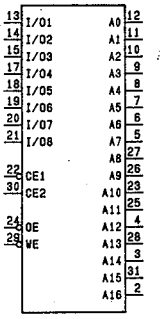

A0–A16 :ADDRESS INPUTS
CE1, CE2 :CHIP ENABLE 1, 2 INPUTS
I/01–I/08 :DATA INPUTS/OUTPUTS
OE :OUTPUT ENABLE INPUT
WE :WRITE ENABLE INPUT

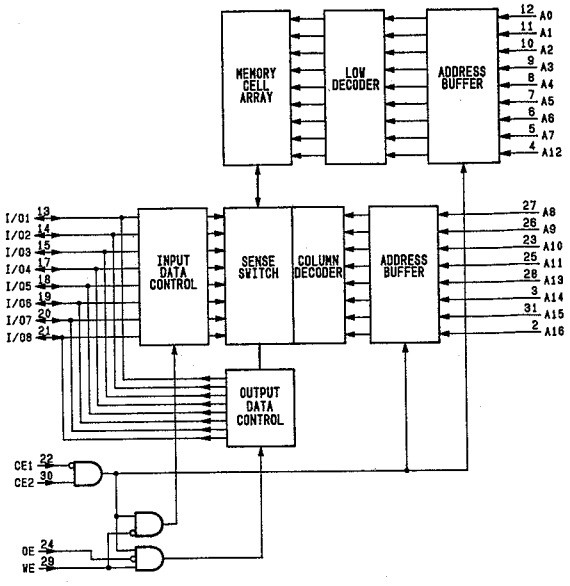

TMP82C79M-2 (TOSHIBA) FLAT PACKAGE

C-MOS PROGRAMABLE KEY-BOARD/DISPLAY INTERFACE DEVICE

– TOP VIEW –

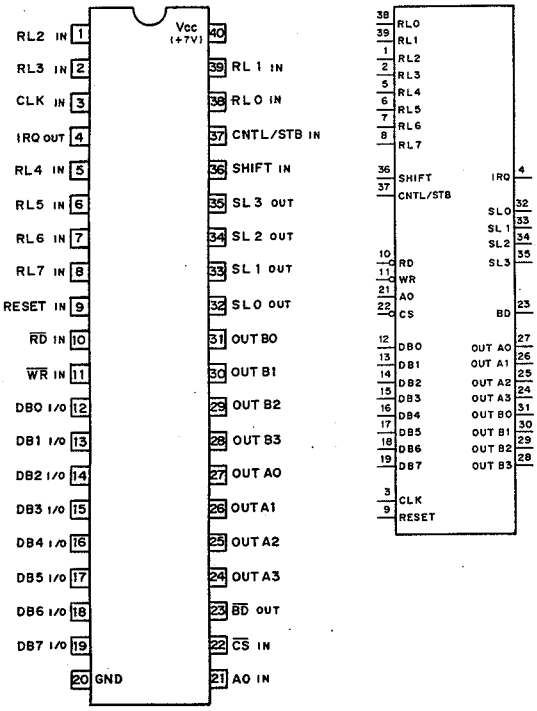

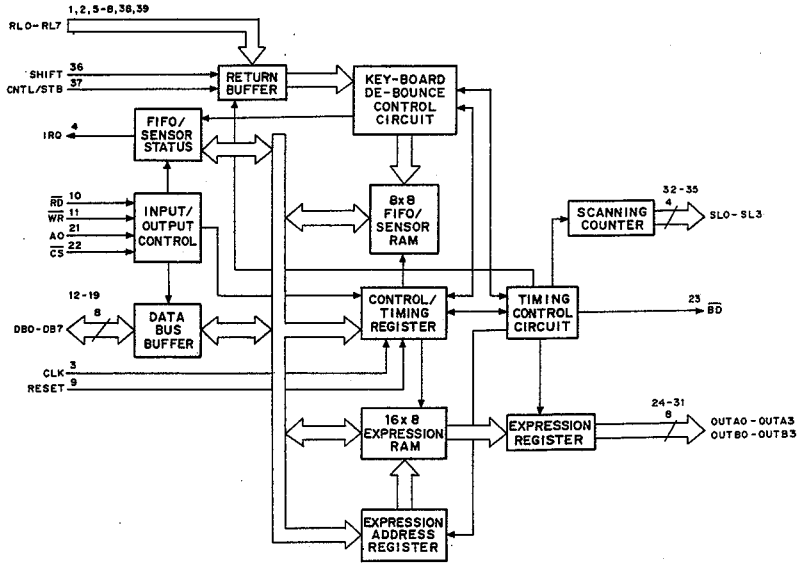


```
      AO ; COMMAND/DATA CONTROL INPUT
      BD ; DISPLAY BLANKING OUTPUT
     CLK ; CLOCK INPUT
 CNTL/STB ; CONTROL/STROBE INPUT
      CS ; CHIP SELECT INPUT
 DB0-DB7 ; DATA BUS INPUT/OUTPUT
     IRQ ; INTERRUPT REQUEST OUTPUT
OUT A0-A3
OUT B0-B3 ; 16x4 BIT EXPRESSION REFRESH REGISTER
      RD ; READ STROBE INPUT
   RESET ; RESET INPUT
RL0-RL7 ; RETURN LINE INPUT
   SHIFT ; SHIFT INPUT
SL0-SL3 ; SCANNING LINE OUTPUT
      WR ; WRITE STROBE INPUT
```

SCANNING

ENCODE

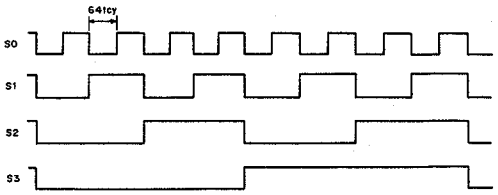

DECODE

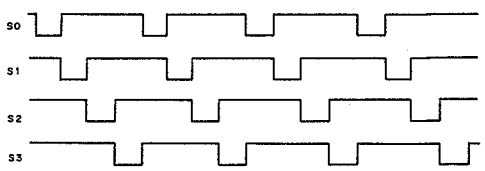

READ

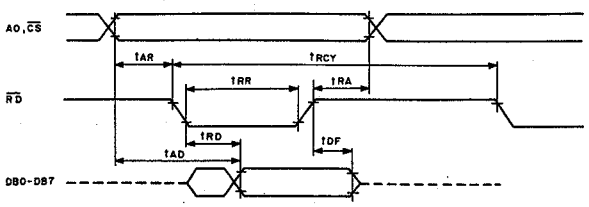

WRITE

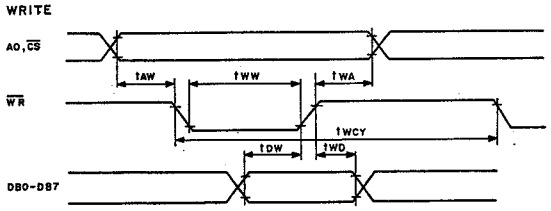

EXPRESSION

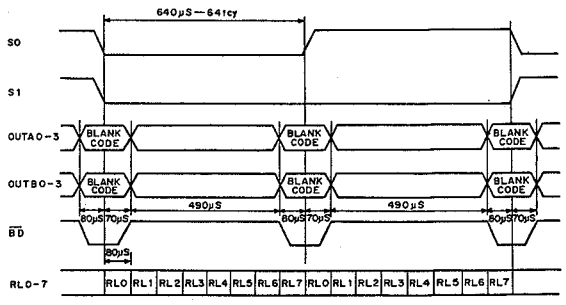

CLOCK

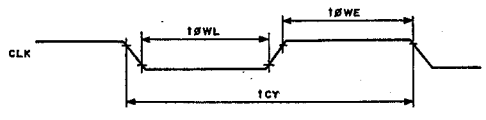

UPD4701AC (NEC)

C-MOS INCREMENTAL ROTARY ENCODER
– TOP VIEW –

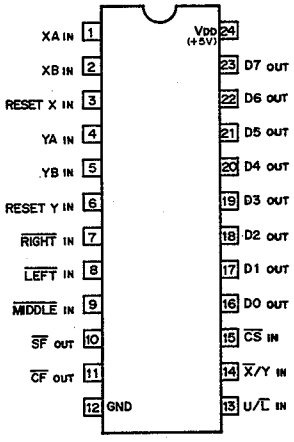

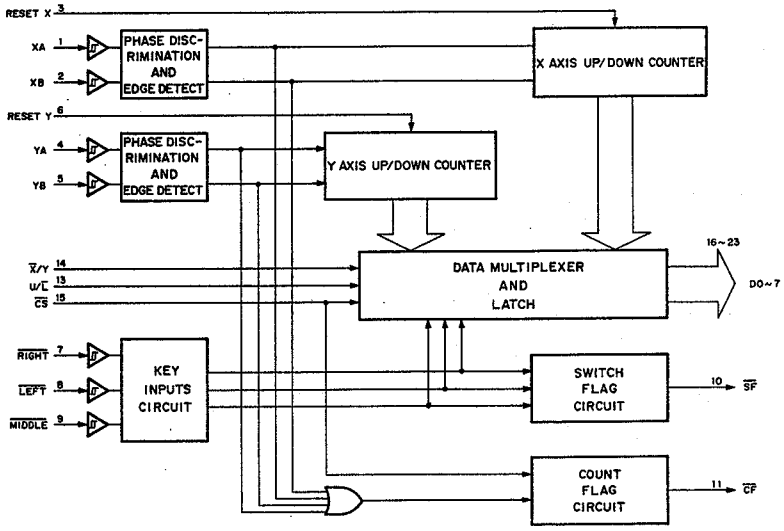

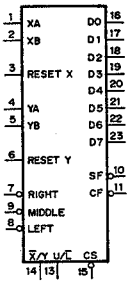

$\overline{CS}$; CHIP SELECT
$\overline{X}/Y$; X/Y COUNTER SELECT
XA,YA ; INPUT A PHASE
XB,YB ; INPUT B PHASE
RIGHT, LEFT, MIDDLE ; SWITCH INPUT FOR INTERNAL STATUS

$U/\overline{L}$; UPPER/LOWER BYTE SELECT
D0~D7 ; DATA
CF ; COUNT FLAG
SF ; SWITCH FLAG
RESET X ; COUNTER RESET
RESET Y ; COUNTER RESET

WS27C010L-12D (WAFERSCALE)

C-MOS 1M (131,072x8)-BIT UV ERASABLE PROM
– TOP VIEW –

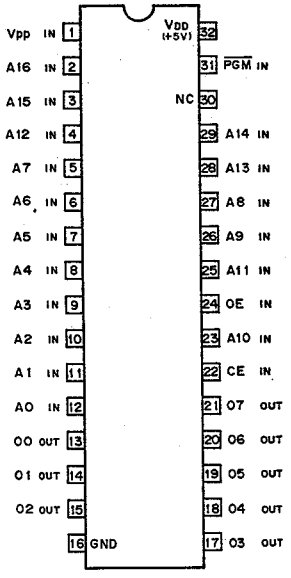

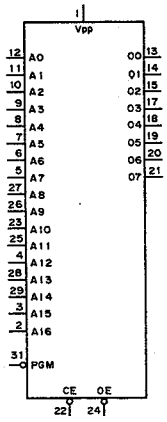

A0 – A16 ; ADDRESS INPUTS
O0 – O7 ; DATA OUTPUTS
CE ; CHIP ENABLE INPUT
OE ; OUTPUT ENABLE INPUT
PGM ; PROGRAM INPUT
XX ; DON'T CARE (DURING READ)

WS57C291B-35T (WAFERSCALE)

C-MOS 16K-BIT (2048x8) HIGH SPEED ERASABLE P-ROM
– TOP VIEW –

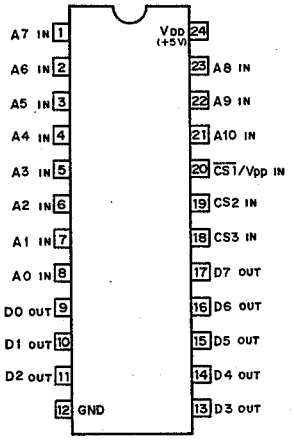

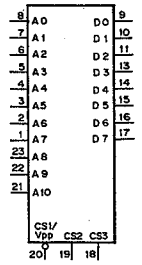

A0 – A12 ; ADDRESS INPUTS
D0 – D7 ; DATA OUTPUTS
CS1 – CS3 ; CHIP SELECT INPUT
V_{PP} ; PROGRAM POWER SUPPLY

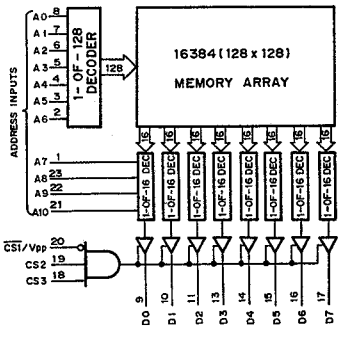

CHIP SEL			OUTPUT
$\overline{CS1}/V_{PP}$	CS2	CS3	
0	1	1	ENABLE
1	0	X	HI-IMPEDANCE
1	X	0	

0 ; LOW LEVEL
1 ; HIGH LEVEL
X ; DON'T CARE

UPD7004C (NEC)

C-MOS 10-BIT SUCCESSIVE COMPARATOR TYPE A/D CONVERTER
– TOP VIEW –

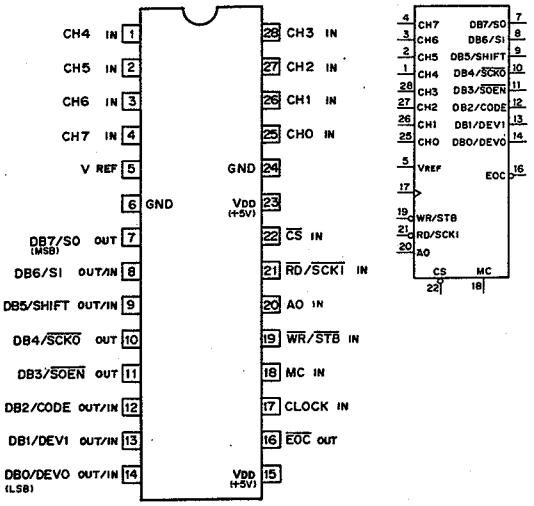

AO ; CONTROL ADDRESS INPUT
CH0~7 ; ANALOG INPUT
CODE ; CODE SELECT (2'S COMPLEMENT/ BINARY) INPUT
CS ; CHIP SELECT INPUT
DB0~7 ; DATA BUS INPUT/OUTPUT
DEV0, DEV1 ; CLOCK RATE SELECT INPUT
EOC ; CONVERSION ENDING SIGNAL OUTPUT
MC ; MODE SELECT INPUT
RD ; READ SIGNAL INPUT
SCKI ; SERIAL CLOCK INPUT
SCKO ; SERIAL CLOCK OUTPUT
SHIFT ; SHIFT SELECT (LSB FIRST/ MSB FIRST)
SI ; SERIAL INPUT
SO ; SERIAL OUTPUT
SOEN ; SERIAL OUTPUT ENABLE OUTPUT
STB ; ADDRESS WRITE STROBE SIGNAL INPUT
WR ; WRITE SIGNAL INPUT

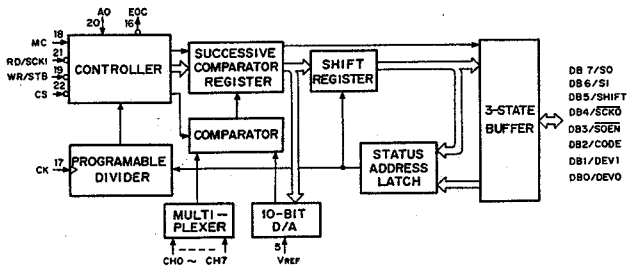

MC	MODE
0	SERIAL
1	PARALLEL

PARALLEL MODE

CS	WR	RD	AO	MODE
1	X	X	X	HIGH IMPEDANCE
0	1	1	X	HIGH IMPEDANCE
0	0	1	0	#1 ANALOG CHANNEL SELECT
0	0	1	1	#2 CODE SELECT/ #3 CLOCK RATE SELECT
0	1	0	0	#4 LOW-BYTE DATA OUTPUT
0	1	0	1	#4 HIGH-BYTE DATA OUTPUT
0	0	0	X	INHIBIT

0 ; LOW LEVEL X : DON'T CARE
1 ; HIGH LEVEL

#1 ANALOG CHANNEL

SEL2	SEL1	SEL0	MPX CHAN.
0	0	0	CH0
0	0	1	CH1
0	1	0	CH2
0	1	1	CH3
1	0	0	CH4
1	0	1	CH5
1	1	0	CH6
1	1	1	CH7

#2 CODE SELECT

CODE	CODE SELECT
0	BINARY DATA
1	2'S COMPLEMENT DATA

#3 CLOCK RATE SELECT

DEV1	DEV 0	CLOCK RATE
0	0	1
0	1	1/2
1	0	1/4
1	1	1/8

#4 LOW/HIGH-BYTE DATA

	DB7	DB 6	DB5	DB4	DB3	DB2	DB1	DB 0
HIGH-BYTE	MSB	2ND	3RD	4TH	5TH	6TH	7TH	8TH
LOW- BYTE	9TH	0	0	0	0	0	0	0

WS57C45-35T (WAFERSCALE)

C-MOS 16K (2048x8)-BIT EPROM (WITH REGISTER)
– TOP VIEW –

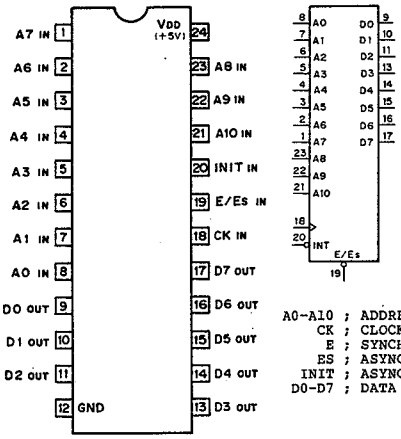

A0~A10 ; ADDRESS INPUTS
CK ; CLOCK INPUT
E ; SYNCHRONOUS ENABLE INPUT
ES ; ASYNCHRONOUS ENABLE INPUT
INIT ; ASYNCHRONOUS INITIALIZATION
D0~D7 ; DATA OUTPUTS

A1	A2	CK	E/ES	INIT	OUTPUTS	FUNCTION
X	X	X	0	1	DATA OUT	READ
X	X	X	1	1	HI-Z	OUTPUT DISABLE
X	X	0	1	Vpp	DATA IN	PGM
X	X	1	0	Vpp	DATA OUT	PGM VERIFY
X	X	1	1	Vpp	HI-Z	PGM INH
X	X	0	1	Vpp	DATA IN	INTELLIGENT PGM
Vpp	1	0	1	Vpp	HI-Z	PGM SYNCH ENABLE
Vpp	0	0	1	Vpp	DATA IN	PGM INITIAL BYTE
X	X	Vpp	1	0	ZEROS	BLANK CHECK ZEROS

0 ; LOW LEVEL
1 ; HIGH LEVEL
X ; DON'T CARE
HI-Z ; HIGH IMPEDANCE
VPP ; PROGRAM POWER SUPPLY (+13V to +14V)

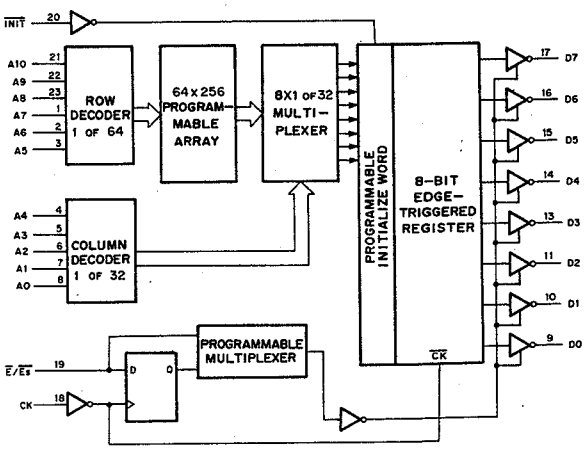

WS57C49B-35T (WAFERSCALE)
C-MOS 64K (8192x8) BIT HIGH SPEED ERASABLE PROM
– TOP VIEW –

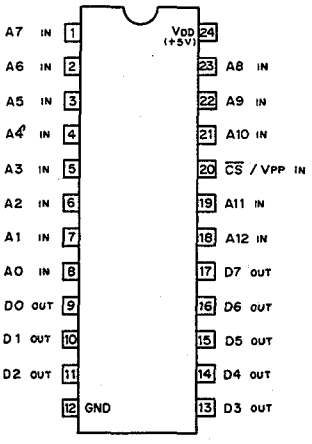

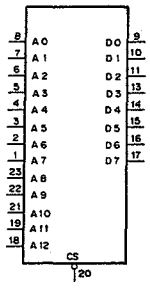

A0-A12 ; ADDRESS INPUTS
D0-D7 ; DATA OUTPUTS
$\overline{CS}$; CHIP SELECT INPUT
Vpp ; PROGRAM POWER SUPPLY

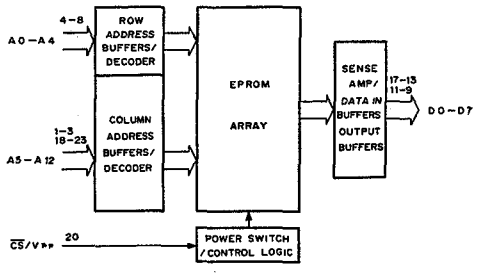

TRANSISTOR

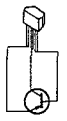

2SA1150

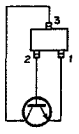

2SC2757
2SC3053
2SC3356

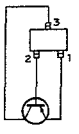

2SA1162
2SA1462

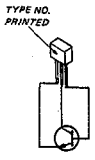

2SC2785

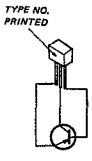

2SA1175

DIODE

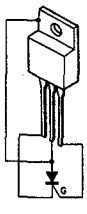

CR6CM

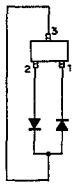

1SS226
1SS271

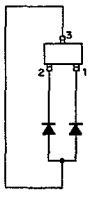

1S2836

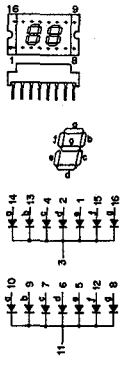

GL-6R202 ; RED

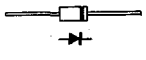

1S953
30D4

LN15BP

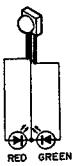

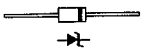

MA152WK

LN35BP ; GREEN
TLR214 ; RED

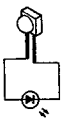

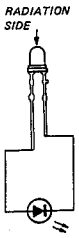

SLR-34VC3 ; RED

RD ? ?ESB ?

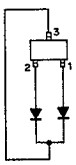

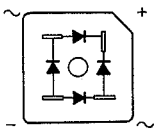

S25VB40

LD-010MW ; GREEN

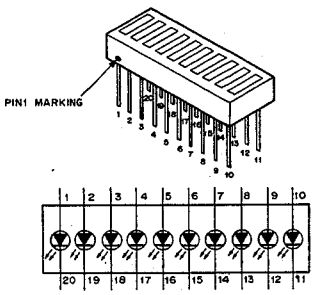

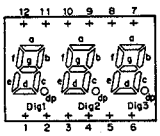

LB-203ML ; GREEN
TRIPLE 7-SEGMENT LED
– TOP VIEW –

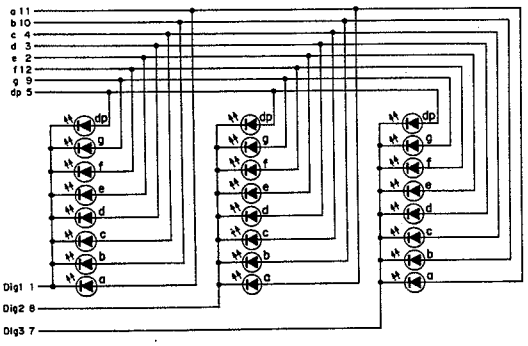

SECTION 9
SPARE PARTS

9-1. NOTES ON SPARE PARTS

(1) Safety Related Components Warning

Components marked with ⚠ on the schematic diagrams, exploded views and electrical spare parts list are critical to safe operation.
Replace these components with Sony parts whose part numbers appear in this manual or in service bulletins and service manual supplements published by Sony.

(2) Standardization of Parts

Repair parts supplied from Sony Parts Center may not be always identical with the parts which actually in use due to "accommodating the improved parts and/or engineering changes" or "standarzation of genuine parts".
This manual's exploded views and electrical spare parts list are indicating the part numbers of "the standardized genuine parts at present".

(3) Stock of Parts

Parts marked with "o" SP (Supply Code) column of the spare parts list are not normally required for routine service work. Orders for parts marked with "o" will be processed, but allow for additional delivery time.

(4) Units for Capacitors, Inductors and Resistors

The following units are assumed in schematic diagrams, electrical parts list and exploded views unless otherwise specified.

Capacitors : μF
Inductors : μH
Resistors : Ω

補修用部品注意事項

(1) 安全重要部品

回路図、分解図、電気部品表中、⚠印の部品は安全性を維持するために重要な部品です。
従ってこれらの部品を交換するときには必ず指定の部品と交換して下さい。

(2) 部品の共通化

ソニーから供給される部品セットに実装されているものと異なることがあります。これは部品の共通化、改良等によるものです。
分解図や電気部品表には現時点での共通化された部品が記載されています。

(3) 部品の在庫

部品表のSP (Supply code) 欄に o で示される部品は交換頻度が低い部品ですので在庫していないことがあり、納期が長くなることがあります。

(4) コンデンサー、インダクター、抵抗の単位

回路図、分解図、電気部品表中、特に明記したものを除き、下記の単位は省略されています。

コンデンサー：μF
インダクター：μH
抵抗　　：Ω

9-2. DVS-6000/6000C EXPLODED VIEWS AND PARTS

CHASSIS 1

No.	Part No.	SP	Description
1	A-6279-484-D	o	HANDLE ASSY, DOOR
2	X-2127-216-1	o	LOCK ASSY, DOOR
3	X-3165-067-1	o	STOPPER ASSY
4	X-3165-221-1	o	ANGLE ASSY (10U), RACK
5	X-3166-937-1	o	PANEL ASSY, FRONT
6	2-139-192-01	o	FRAME, INDICATOR WINDOW
7	2-139-193-01	o	WINDOW, INDICATOR
8	2-249-353-00	o	COVER, LAMP
9	3-166-131-01	o	TABLE (H), STAY
10	3-166-133-01	o	HINGE (H)
11	3-166-135-01	o	HINGE (F)
12	3-166-136-01	o	PIN, HINGE
13	3-166-203-03	o	FILTER
14	3-166-223-02	o	PLATE, SIDE, LEFT, PANEL
15	3-175-256-01	o	BRACKET (4), SNAP FINGER
16	3-175-257-01	o	BRACKET (2), SNAP FINGER
17	3-175-258-01	o	BRACKET (3), SNAP FINGER
18	3-175-259-01	o	BRACKET (1), SNAP FINGER
19	3-175-260-01	o	FINGER, SNAP
20	3-176-177-01	o	HANDLE
21	3-179-171-01	o	PLATE, TOP
22	3-642-656-01	s	FOOT
23	4-334-513-00	s	NUT, NYLON

CHASSIS-1

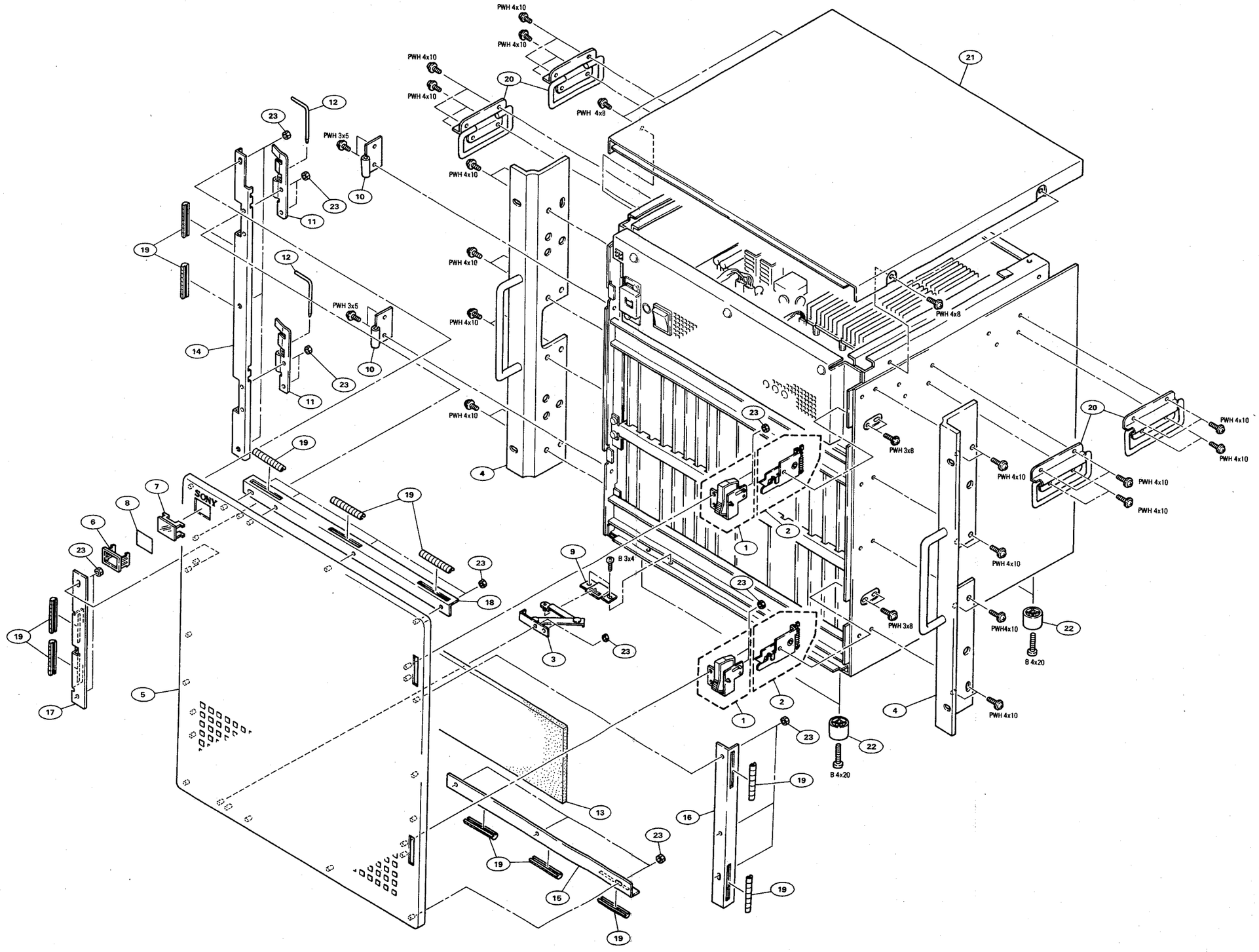
PWH 4x10
PWH 4x10
PWH 4x10
PWH 4x10
PWH 4x8
PWH 3x5
PWH 4x10
PWH 4x10
PWH 3x5
PWH 4x10
PWH 4x10
PWH 4x8
PWH 3x8
PWH 4x10
PWH 4x10
PWH 4x10
PWH 4x10
PWH 4x10
PWH 3x8
PWH4x10
PWH 4x10
B 3x4
B 4x20
B 4x20
SONY

CHASSIS 2

No.	Part No.	SP	Description
101	A-8271-806-A	o	MOUNTED CIRCUIT BOARD, WKG-10
			OPTION BOARD BKDS-6070:WP-37
102	A-8271-807-A	o	MOUNTED CIRCUIT BOARD, KPC-5
			OPTION BOARD BKDS-6071:BD-22
103	A-8271-808-A	o	MOUNTED CIRCUIT BOARD, DSK-9 (FOR DVS-6000)
	A-8271-890-A	o	MOUNTED CIRCUIT BOARD, DSK-9A (FOR DVS-6000C)
104	A-8271-809-A	o	MOUNTED CIRCUIT BOARD, CPU-147
105	A-8271-810-A	o	MOUNTED CIRCUIT BOARD, MIX-8 (FOR DVS-6000)
	A-8271-889-A	o	MOUNTED CIRCUIT BOARD, MIX-8A (FOR DVS-6000C)
106	A-8271-811-A	o	MOUNTED CIRCUIT BOARD, OUT-3
			OPTION BOARD BKDS-6063:SD-31
			BKDS-6064:DA-73
107	A-8271-812-A	o	MOUNTED CIRCUIT BOARD, MAT-4
			OPTION BOARD BKDS-6072:MT-90
108	A-8271-813-A	o	MOUNTED CIRCUIT BOARD, LE-118 (FOR DVS-6000)
	A-8271-891-A	o	MOUNTED CIRCUIT BOARD, LE-118(A) (FOR DVS-6000C)
			OPTION BOARD BKDS-6060:SD-30
			BKDS-6061:DA-71
			BKDS-6062:DA-72
109	A-8271-815-A	o	MOUNTED CIRCUIT BOARD, SG-210 (FOR DVS-6000)
	A-8271-892-A	o	MOUNTED CIRCUIT BOARD, SG-211 (FOR DVS-6000C)
110	X-3165-222-2	o	RETAINER ASSY, PC BOARD
111	X-3165-223-1	o	PLATE ASSY, SHIELD
112	X-3166-935-1	o	RETAINER ASSY, PC BOARD
113	2-249-250-00	s	CLIP (SMALL), CANOE
114	3-166-132-02	o	SPACER (G)
115	3-166-184-01	o	LEVER, PC BOARD
116	3-166-185-01	o	NUT, PLATE
117	3-166-195-01	o	RETAINER, RAIL TABLE
118	3-166-196-02	o	RETAINER, EJECTOR
119	3-166-200-01	o	BRACKET, FCC
120	3-166-213-02	o	REINFORCEMENT
121	3-166-214-01	o	SHEET, INDICATION
122	3-166-230-02	o	TABLE, RAIL
123	3-166-230-12	o	TABLE, RAIL
124	3-166-231-02	o	PLATE, BOTTOM
125	3-166-232-02	o	PLATE (R), SIDE
126	3-166-233-02	o	PLATE (L), SIDE
127	3-167-575-03	o	TABLE, SLIDE, POWER
128	3-179-135-02	o	BRACKET (R), MB
129	3-179-136-02	o	BRACKET (L), MB
130	3-179-137-01	o	HOLDER, PC BOARD
131	3-179-150-01	o	BRACKET EXTENSION
132	3-179-166-01	o	JOINT (S)
133	3-179-230-01	o	JOINT
134	3-654-139-21	o	SHAFT, FLANG
135	3-703-074-01	s	CAP (3), SHAFT
136	3-724-333-11	o	GUIDE (S), CASSETTE
137	7-626-320-11	o	PIN, SPRING 3X8

CHASSIS-2

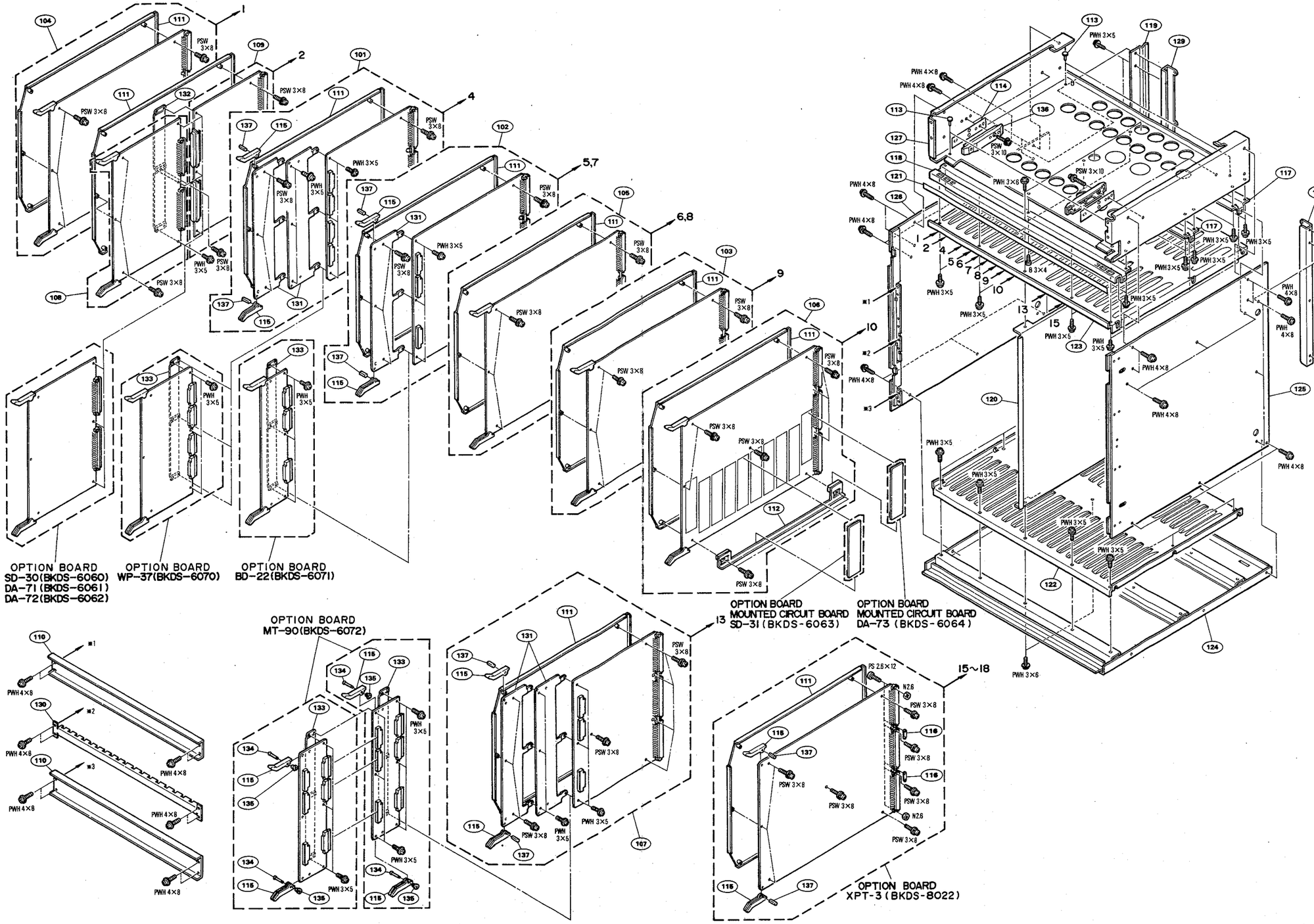
OPTION BOARD
SD-30(BKDS-6060)
DA-71(BKDS-6061)
DA-72(BKDS-6062)
OPTION BOARD
WP-37(BKDS-6070)
OPTION BOARD
BD-22(BKDS-6071)
OPTION BOARD
MT-90(BKDS-6072)
OPTION BOARD
MOUNTED CIRCUIT BOARD
SD-31(BKDS-6063)
OPTION BOARD
MOUNTED CIRCUIT BOARD
DA-73(BKDS-6064)
OPTION BOARD
XPT-3(BKDS-8022)

POWER UNIT

No.	Part No.	SP	Description
201	A-8271-814-A	o	MOUNTED CIRCUIT BOARD, RE-96
202	⚠1-572-345-11	s	SWITCH, ROCKER (AC POWER)
203	⚠1-573-785-11	o	HOUSING 8P
204	⚠1-576-036-11	s	BREAKER, CIRCUIT
205	⚠1-580-349-11	o	HOUSING 20P
206	1-631-489-11	o	PRINTED CIRCUIT BOARD, LE-76
207	1-698-080-11	s	MOTOR, DC FAN (ASF9038001)
208	2-249-250-00	s	CLIP (SMALL), CANOE
209	2-280-622-21	o	SUPPORT (M3X10), HEXAGON
210	3-166-190-12	s	NUT, PLATE
211	3-166-190-22	s	NUT, PLATE
212	3-172-089-01	o	HANDLE
213	3-179-122-02	o	PLATE, FIXED, PS
214	3-179-123-01	o	PAD, THERMAL
215	3-179-124-02	o	PLATE, INDICATION
216	3-179-162-02	o	PANEL, PS FRONT
217	3-179-163-01	o	HEAT SINK
218	3-179-172-02	o	CHASSIS, PS
219	3-669-602-00	s	SPRING, COMPRESSION
220	3-674-390-00	o	HOLDER (B), LED
221	3-723-892-01	o	COVER, CIRCUIT BREAKER

POWER UNIT

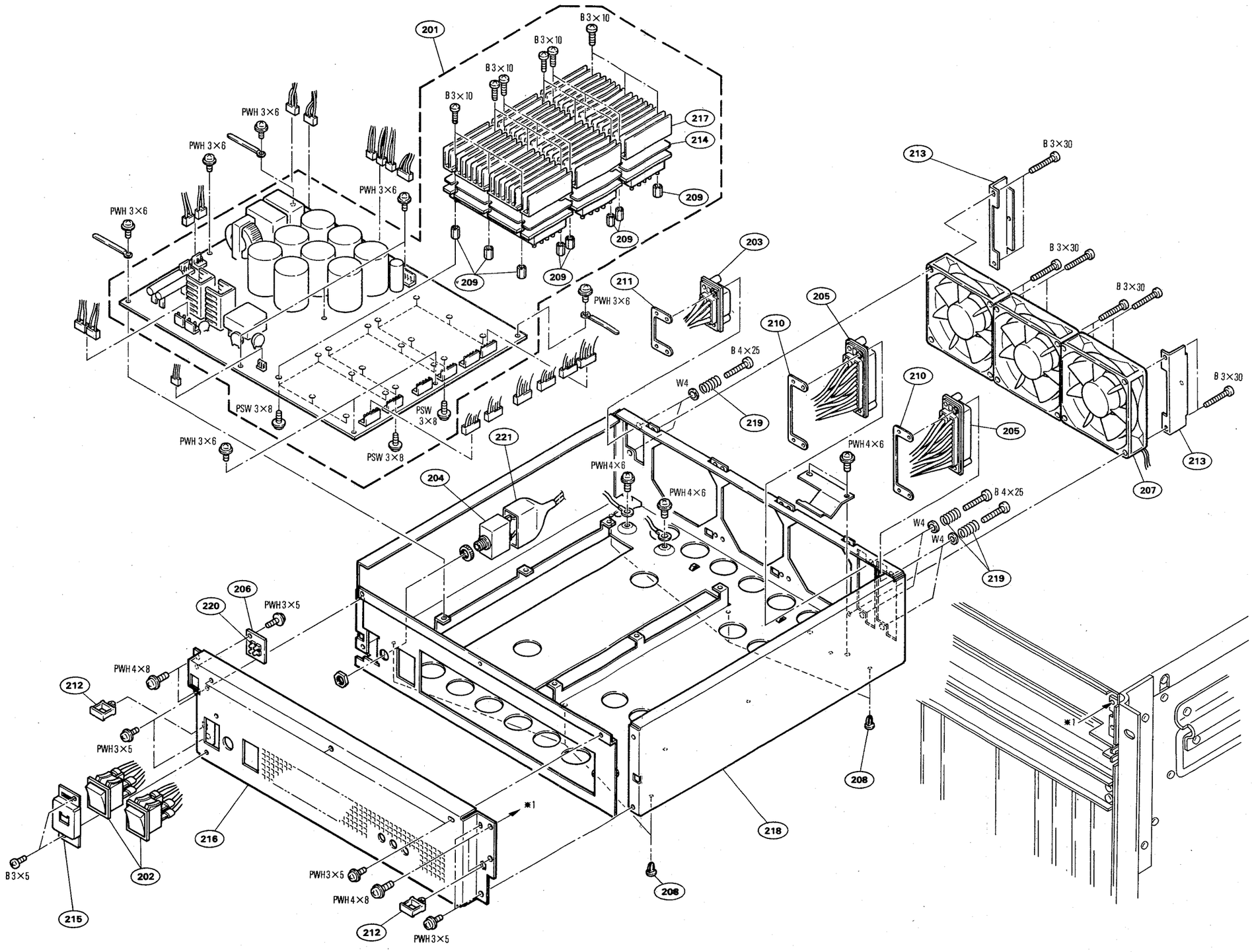
201
B 3×10
B 3×10
B 3×10
B 3×10
217
214
209
209
209
209
PWH 3×6
PWH 3×6
PWH 3×6
PWH 3×6
PSW 3×8
PSW 3×8
PWH 3×6
PSW 3×8
203
211
PWH 3×6
205
210
B 4×25
W4
219
221
204
PWH 4×6
PWH 4×6
PWH 4×6
PWH 4×6
213
B 3×30
B 3×30
B 3×30
B 3×30
210
205
213
207
B 4×25
W4
W4
219
206
220
PWH 3×5
PWH 4×8
212
PWH 3×5
216
202
B 3×5
215
*1
PWH 3×5
PWH 4×8
212
PWH 3×5
208
218
208
*1

REAR PANEL REAR PANEL

REAR PANEL

No.	Part No.	SP	Description
301	⚠--PENDING---	s	CONNECTOR 8P, MALE
302	⚠--PENDING---	s	CONEECTOR 20P, MALE
303	A-8267-100-A	o	CN-843 ASSY
304	A-8267-101-A	o	CN-312 (C) ASSY
305	A-8267-102-A	o	MB-482 ASSY
306	A-8267-179-A	o	CN-311 ASSY (FOR DVS-6000)
307	A-8267-212-A	o	CN-311(B) ASSY (FOR DVS-6000C)
308	X-2068-004-0	s	TERMINAL ASSY
309	1-563-384-11	s	CONNECTOR, AMPHE 50P, FEMALE
310	1-563-890-21	s	CONNECTOR, D-SUB 9P, FEMALE
311	1-563-891-21	s	CONNECTOR, D-SUB 25P, FEMALE
312	1-580-356-11	s	CONNECTOR, BNC, FEMALE
313	1-580-375-21	s	INLET, AC 3P, MALE
314	2-068-008-00	s	WASHER
315	2-270-616-00	o	HANDLE
316	2-990-242-01	o	HOLDER (B) PLUG
317	3-166-187-01	o	SPACER
318	3-166-201-11	o	PANEL, BNC
319	3-167-576-01	o	BRACKET, HANDLE
320	3-168-628-01	o	GUIDE, PCB
321	3-179-120-01	o	SUPPORT
322	3-179-121-01	o	BRACKET, AC INLET
323	3-179-161-01	o	PANEL, REAR
324	3-179-164-02	o	PANEL (A), CN
325	3-179-165-02	o	PANEL (B), CN
326	3-179-579-01	o	PANEL (C), CN (FOR DVS-6000)
	3-179-811-01	o	PANEL (C), CN (FOR DVS-6000C)
327	3-673-910-21	o	SCREW, CONNECTOR
328	3-711-649-01	o	STUD

REAR PANEL

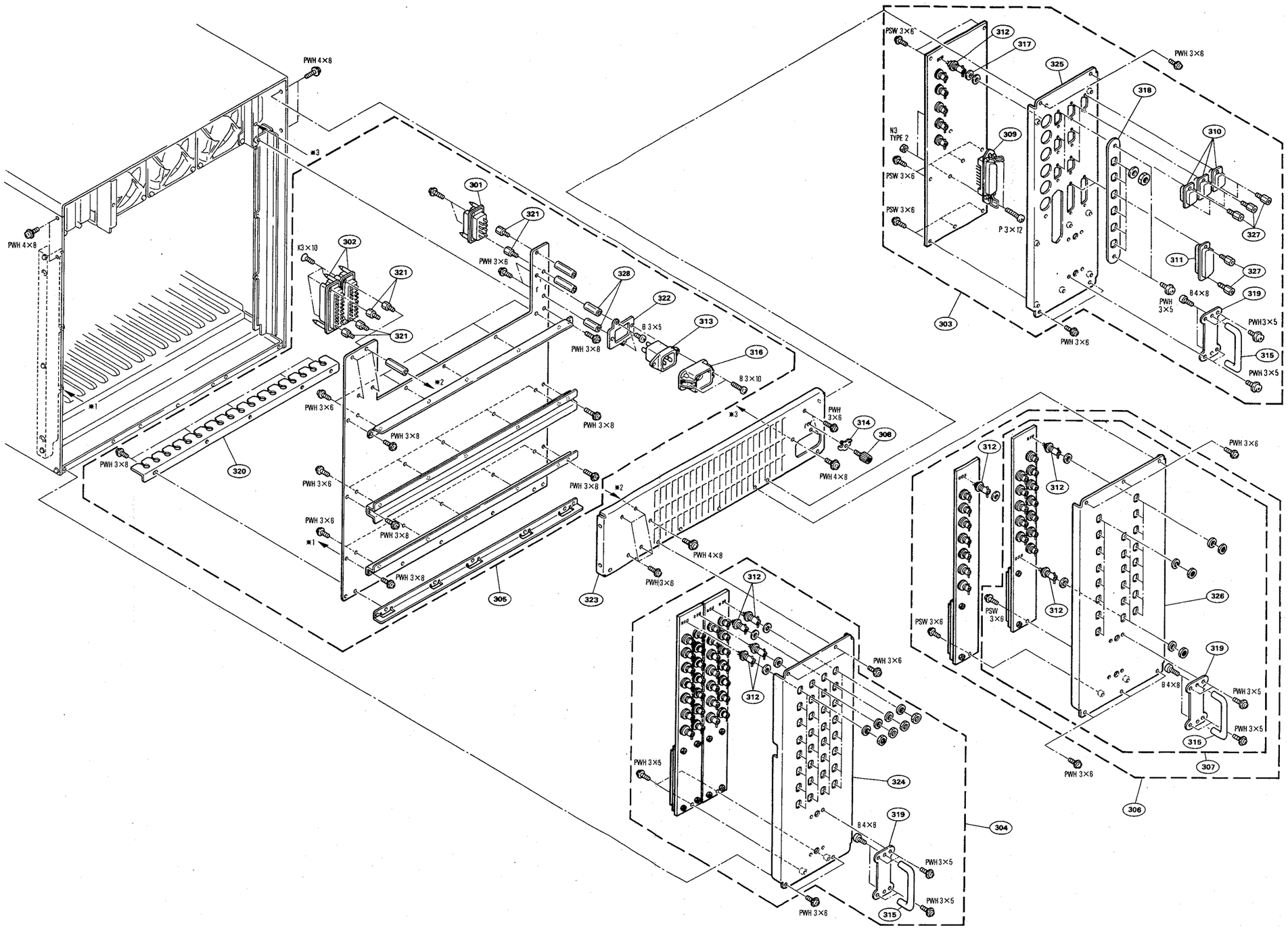
PWH 4×8
PWH 4×8
K3×10
301
302
321
321
321
PWH 3×6
328
322
313
316
B 3×5
B 3×10
PWH 3×8
PWH 3×6
PWH 3×8
PWH 3×8
PWH 3×8
PWH 3×6
PWH 3×8
PWH 3×8
PWH 3×6
PWH 3×8
320
305
323
PWH 4×8
PWH 3×6
314
306
PWH 4×8
PSW 3×6
312
317
325
PWH 3×6
318
N3 TYPE 2
309
310
PSW 3×6
PSW 3×6
P 3×12
327
311
327
B 4×8
319
PWH 3×5
PWH3×5
315
PWH 3×5
303
PWH 3×6
312
312
PWH 3×6
326
PSW 3×6
PSW 3×6
312
319
B 4×8
PWH 3×5
PWH 3×5
315
307
PWH 3×6
306
312
312
PWH 3×6
PWH 3×5
324
319
B 4×8
304
PWH3×5
PWH 3×5
315
PWH 3×6

CHASSIS, POWER UNIT & REAR PANEL

9-3. BKDS-6010
EXPLODED VIEWS AND PARTS

CHASSIS, POWER UNIT & REAR PANEL

No.	Part No.	SP	Description
1	A-8271-798-A	o	MOUNTED CIRCUIT BOARD, CPU-131
2	X-2068-004-0	s	TERMINAL ASSY
3	X-3166-507-1	o	ESCUTCHEON ASSY, POWER
4	X-3678-024-1	o	PANEL SUB ASSY
5	X-4918-919-1	s	LEG ASSY
6	⚠1-413-581-11	s	REGULATOR, SWITCHING (EWS50-12)
7	⚠1-413-803-11	s	REGURATOR, SWITCHING (EWS25-5)
8	⚠1-424-451-11	s	FILTER, NOISE
9	1-563-890-21	s	CONNECTOR, D-SUB 9P, FEMALE
10	⚠1-570-384-11	s	SWITCH, ROCKER (AC POWER)
11	1-646-597-11	o	PRINTED CIRCUIT BOARD, CN-789
12	1-646-598-11	o	PRINTED CIRCUIT BOARD, CN-790
13	1-951-248-11	s	HARNESS (CN789)
14	2-068-008-00	s	WASHER
15	2-236-956-00	s	SCREW, STEP
16	2-990-241-02	s	HOLDER (A), PLUG
17	3-179-054-01	o	TOOL, CAP PULL
18	3-542-914-01	o	SPRING TENSION
19	3-673-910-21	s	SCREW CONNECTOR
20	3-678-055-01	o	BRACKET, POWER SW
21	3-678-056-01	o	HING
22	3-678-063-01	o	COLLAR
23	3-678-064-01	o	CASE
24	3-678-065-01	o	REINFORCEMENT(R)
25	3-678-066-01	o	REINFORCEMENT(L)
26	3-678-069-01	o	PANEL, CN
27	3-678-075-01	o	COUNTER BALANCE(R)
28	3-678-076-01	o	COUNTER BALANCE(L)
29	3-678-077-01	o	BRACKET, COUNTER
30	3-678-079-01	s	+BVWH 3X8 GIZA TITE
31	3-678-095-01	o	CAM
32	3-678-272-01	s	PLATE,SLIDE(R)
33	3-678-273-01	s	PLATE,SLIDE(L)
34	3-678-274-01	o	KNOB
35	3-678-275-01	o	PLATE,LOCK
36	3-688-814-01	s	CAP, SWITCH
37	3-711-018-01	o	STAND OFF-BRAKE BAND GUIDE
38	7-624-200-11	s	NUT, PUSH 2

9-10

CHASSIS, POWER UNIT & REAR PANEL

CHASSIS, POWER UNIT & REAR PANEL

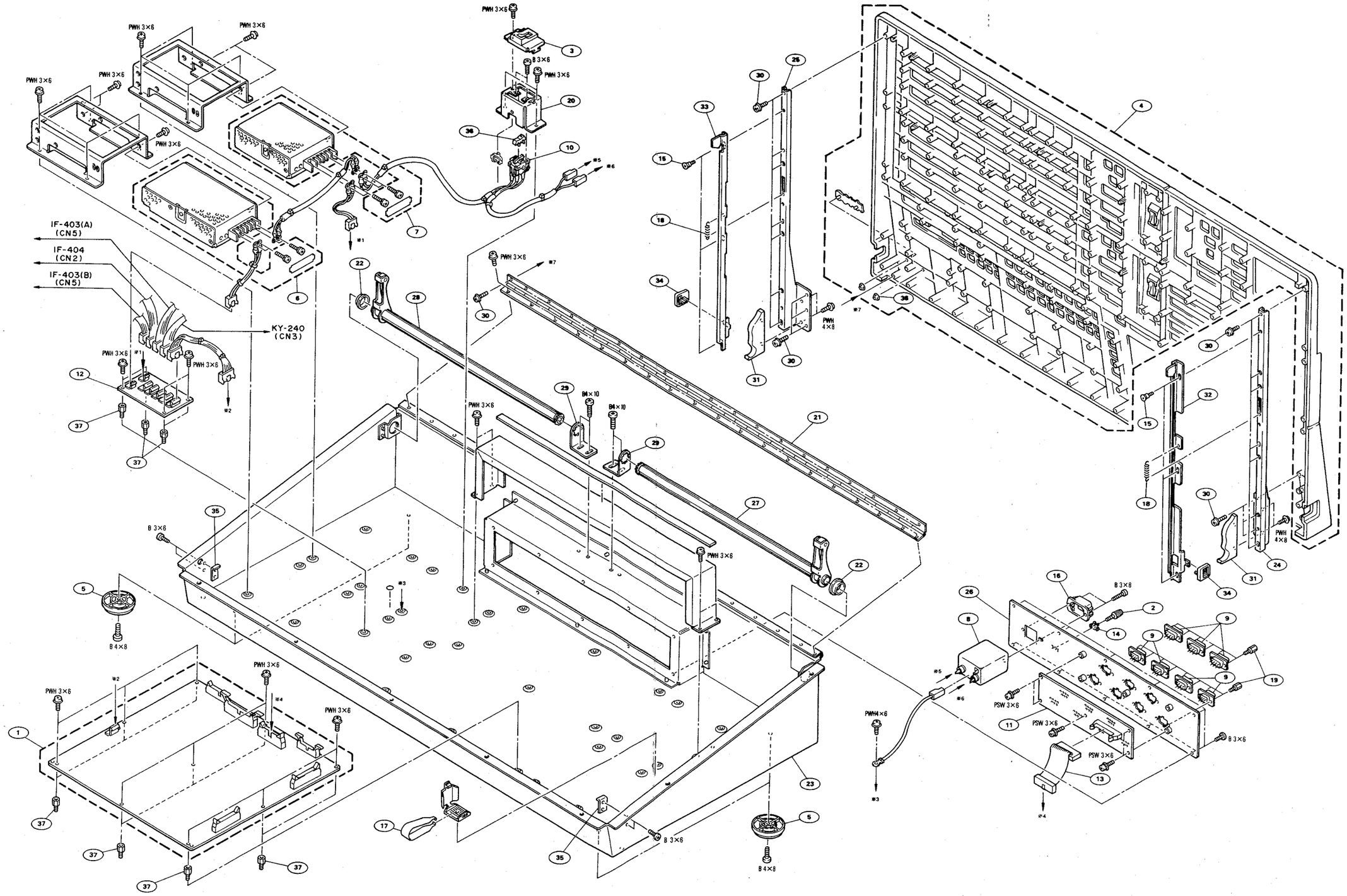

9-11

LOCATIONS OF KEY TOP
KY-240 BOARD

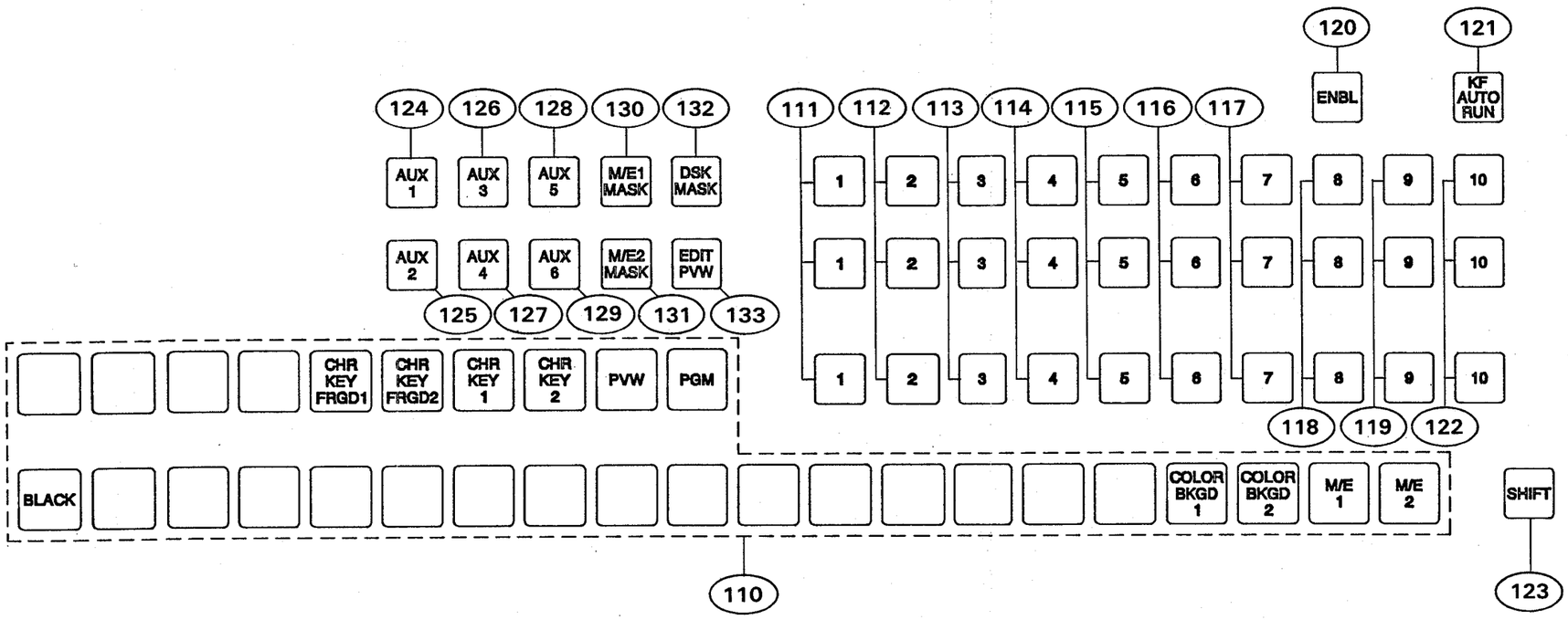

OPERATION UNIT 1

No.	Part No.	SP	Description
101	A-8030-493-A	s	PANEL ASSY, FRONT
102	A-8041-471-B	s	S9 MFD ASSY (S)
103	A-8271-792-A	o	MOUNTED CIRCUIT BOARD, KY-240
104	1-692-416-11	s	SWITCH, PUSH
105	1-692-418-11	s	SWITCH, PUSH
106	1-692-426-21	s	SWITCH, PUSH
107	1-951-247-11	s	HARNESS (FDD)
108	3-678-074-01	o	BRACKET FD
109	3-678-079-01	s	+BVWH 3X8 GIZA TITE
110	3-678-083-01	o	TIP (3), SW
111	3-708-592-11	o	KEY TOP
112	3-708-592-21	o	KEY TOP
113	3-708-592-31	o	KEY TOP
114	3-708-592-41	o	KEY TOP
115	3-708-592-51	o	KEY TOP
116	3-708-592-61	o	KEY TOP
117	3-708-592-71	o	KEY TOP
118	3-708-592-81	o	KEY TOP
119	3-708-592-91	o	KEY TOP
120	3-708-593-91	o	KEY TOP
121	3-708-597-52	o	KEY TOP
122	3-708-599-21	o	KEY TOP
123	3-708-599-41	o	KEY TOP
124	3-708-599-61	o	KEY TOP
125	3-708-599-71	o	KEY TOP
126	3-708-599-81	o	KEY TOP
127	3-708-599-91	o	KEY TOP
128	3-708-600-01	o	KEY TOP
129	3-708-600-11	o	KEY TOP
130	3-708-600-21	o	KEY TOP
131	3-708-600-31	o	KEY TOP
132	3-708-600-41	o	KEY TOP
133	3-708-600-51	o	KEY TOP
134	3-708-605-01	o	KEY TOP
135	4-314-320-00	o	HOLDER, WIRE

OPERATION UNIT-1

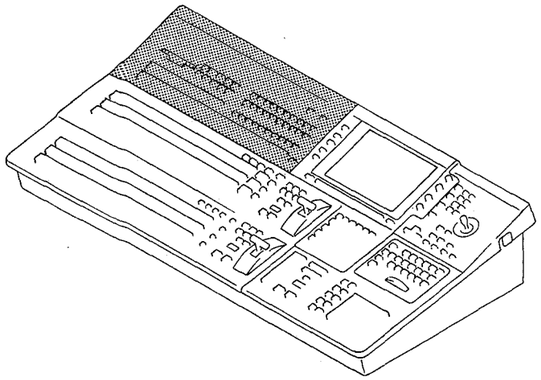

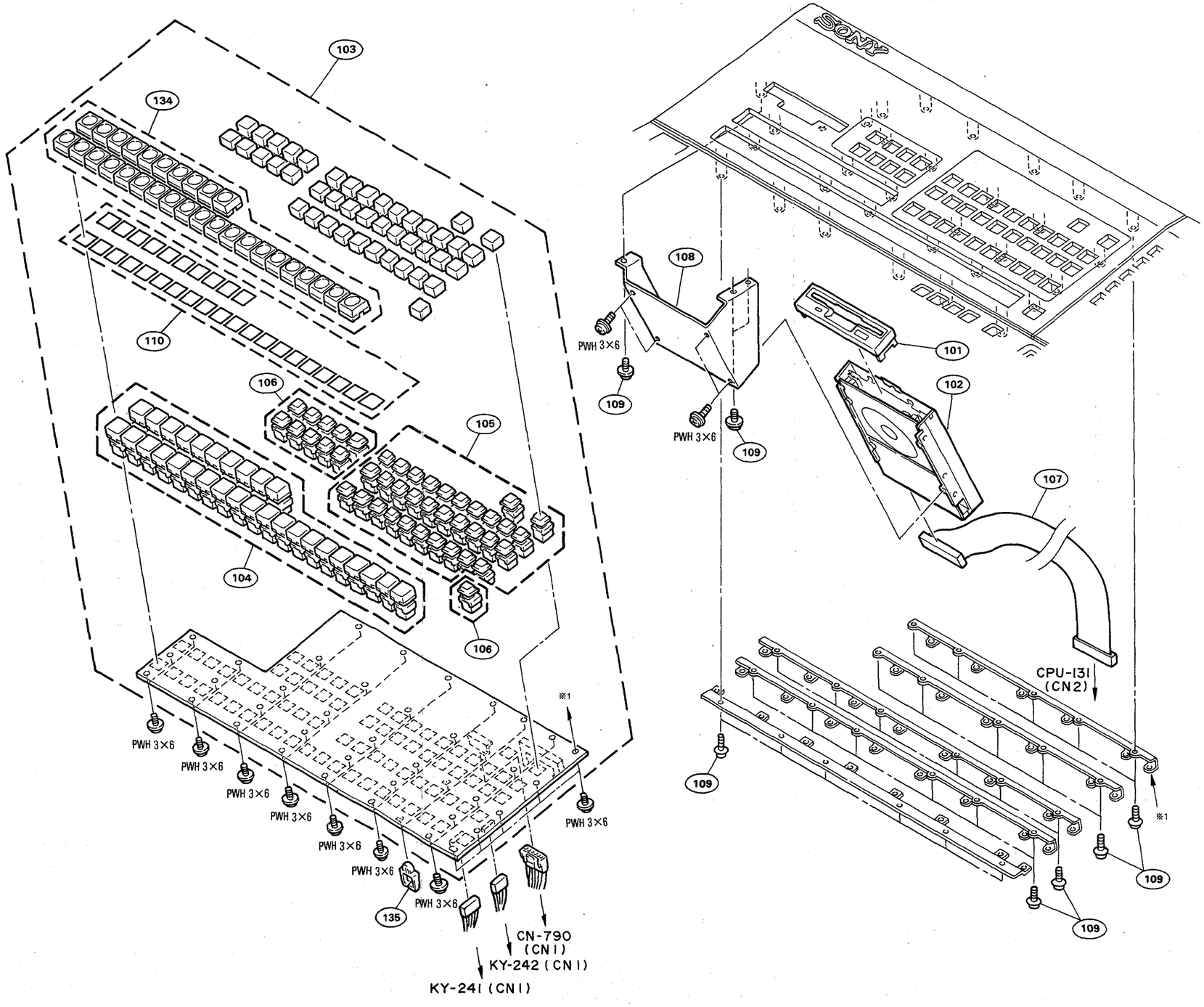

LOCATIONS OF KEY TOP
KY-238 BOARD
KY-239 (A) (B) BOARD

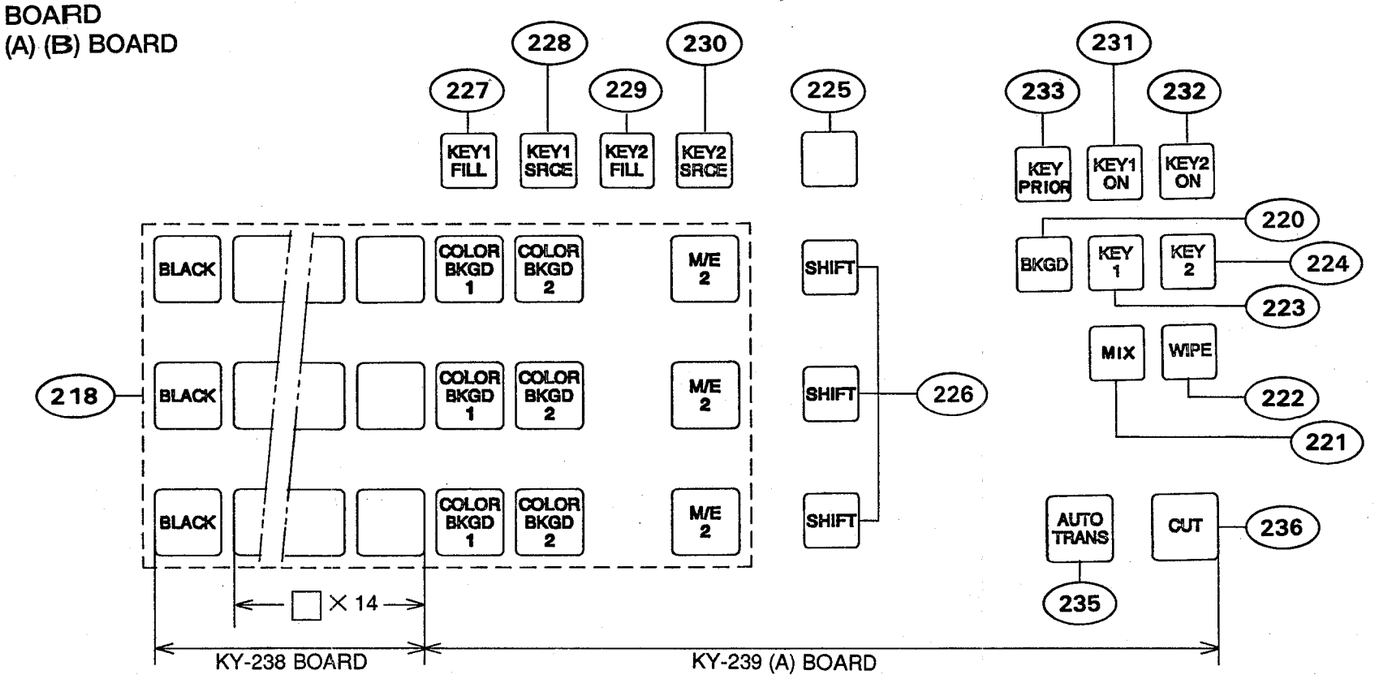

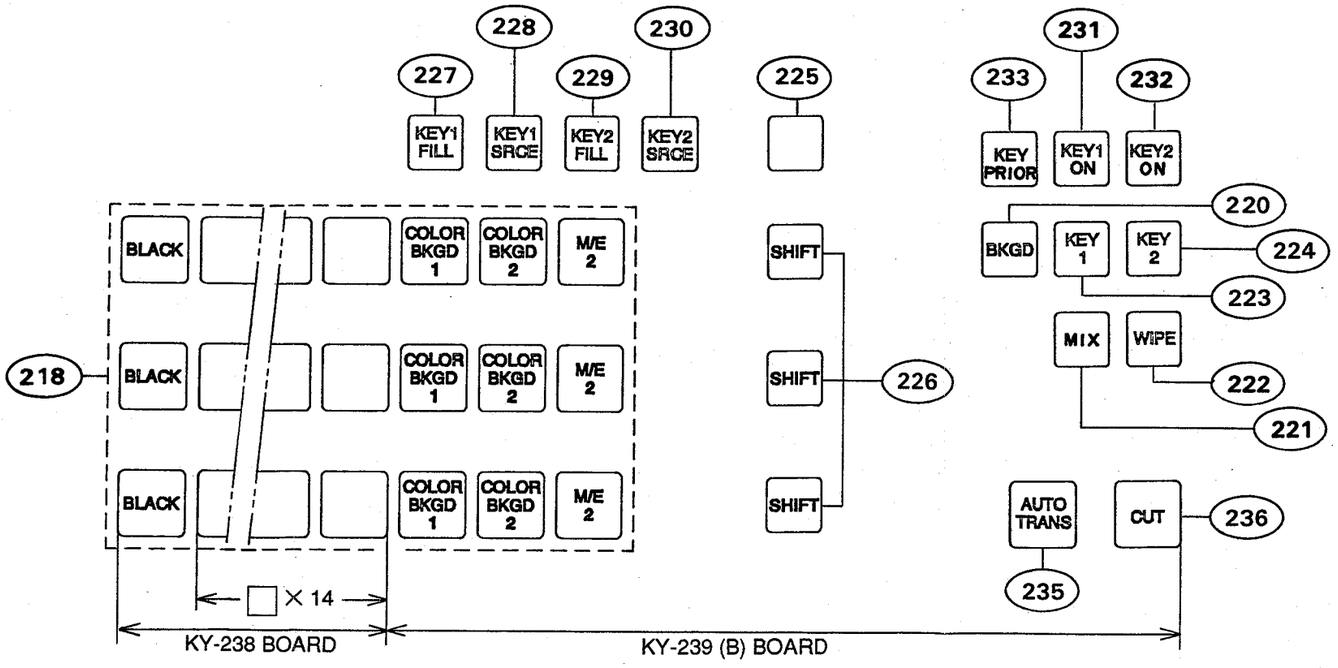

OPERATION UNIT 2

No.	Part No.	SP	Description
201	A-8271-714-A	o	MOUNTED CIRCUIT BOARD, KY-238
202	A-8271-715-A	o	MOUNTED CIRCUIT BOARD, IF-403 (B)
203	A-8271-716-A	o	MOUNTED CIRCUIT BOARD, KY-239 (B)
204	A-8271-791-A	o	MOUNTED CIRCUIT BOARD, KY-239 (A)
205	A-8271-796-A	o	MOUNTED CIRCUIT BOARD, IF-403 (A)
206	1-646-592-11	o	PRINTED CIRCUIT BOARD, LE-111
207	1-646-593-11	o	PRINTED CIRCUIT BOARD, LE-112
208	1-692-414-21	s	SWITCH, PUSH
209	1-692-416-11	s	SWITCH, PUSH
210	1-692-418-11	s	SWITCH, PUSH
211	1-692-426-21	s	SWITCH, PUSH
212	1-951-249-11	s	HARNESS (BUS)
213	1-951-250-12	s	HARNESS (KY238)
214	3-673-796-02	o	CLAMP, FLAT CABLE
215	3-678-079-01	s	+BVWH 3X8 GIZA TITE
216	3-678-084-01	o	SPACER(1),PCB
217	3-678-085-01	o	SPACER(2),PCB
218	3-678-086-01	o	TIP(4), SW
219	3-678-289-01	o	SPACER (3)
220	3-708-593-11	o	KEY TOP
221	3-708-593-21	o	KEY TOP
222	3-708-593-31	o	KEY TOP
223	3-708-595-51	o	KEY TOP
224	3-708-595-61	o	KEY TOP
225	3-708-599-31	o	KEY TOP
226	3-708-599-41	o	KEY TOP
227	3-708-600-61	o	KEY TOP
228	3-708-600-71	o	KEY TOP
229	3-708-600-81	o	KEY TOP
230	3-708-600-91	o	KEY TOP
231	3-708-601-01	o	KEY TOP
232	3-708-601-11	o	KEY TOP
233	3-708-601-51	o	KEY TOP
234	3-708-605-01	o	KEY TOP
235	3-708-608-11	o	KEY TOP
236	3-708-608-21	o	KEY TOP
237	4-314-320-00	o	HOLDER, WIRE
238	4-812-134-11	s	RIVET NYLON, 3.5

OPERATION UNIT-2

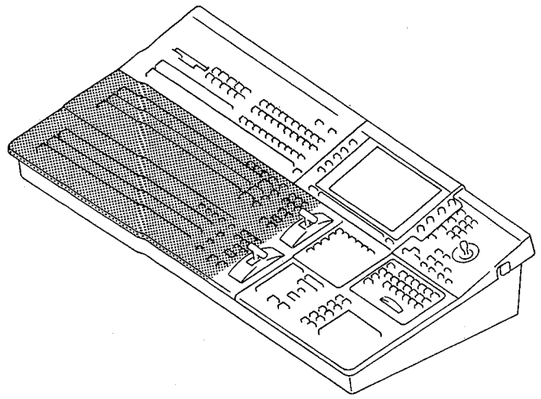

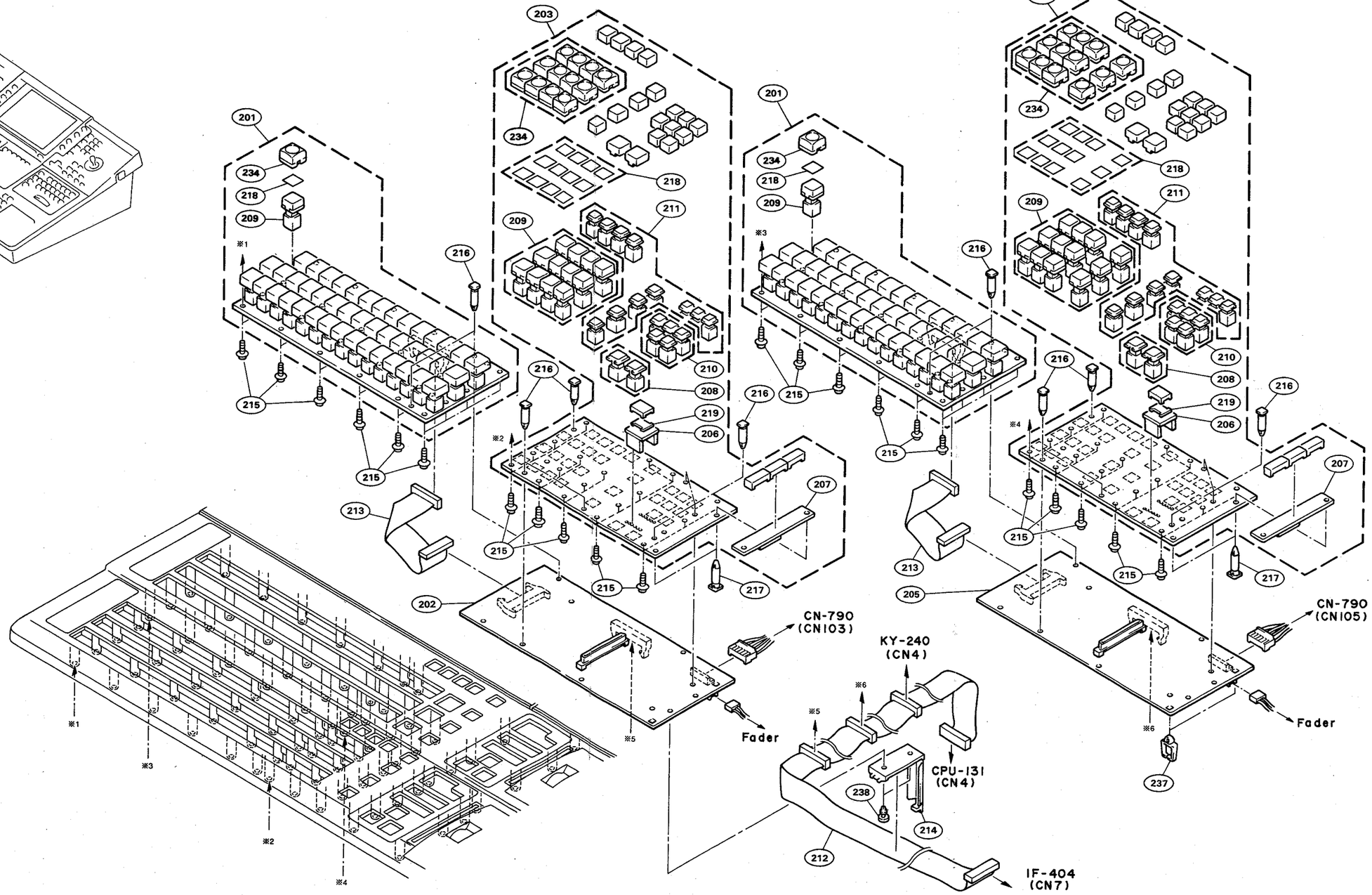

OPERATION UNIT 3

No.	Part No.	SP	Description
301	A-8271-794-A	o	MOUNTED CIRCUIT BOARD, KY-245
302	A-8271-795-A	o	MOUNTED CIRCUIT BOARD, KY-246
303	A-8271-799-A	o	MOUNTED CIRCUIT BOARD, KY-241
304	A-8271-800-A	o	MOUNTED CIRCUIT BOARD, KY-242
305	1-238-724-11	s	RES, VAR(STICK) CARBON 10Kx2
306	1-466-954-11	s	DISPLAY UNIT, EL
307	1-466-955-11	s	ENCODER, ROTARY
308	1-692-412-21	s	SWITCH, PUSH
309	1-692-418-11	s	SWITCH, PUSH
310	1-951-246-11	s	HARNESS (EL)
311	2-280-622-21	o	SUPPORT (M3X10), HEXAGON
312	3-166-428-01	s	COVER, JOG
313	3-178-147-02	s	KNOB, VOLUME
314	3-178-151-01	s	LEVER, JOG
315	3-673-796-02	o	CLAMP, FLAT CABLE
316	3-678-048-01	o	CUSHION(2)
317	3-678-053-01	o	CUSHION(1)
318	3-678-057-01	o	BRACKET, INDICATION PANEL
319	3-678-058-01	o	PANEL, INDICATION
320	3-678-062-01	o	BRACKET, EL
321	3-678-078-01	o	BRACKET, PC BOARD
322	3-708-590-11	o	KEY TOP
323	3-708-590-21	o	KEY TOP
324	3-708-590-31	o	KEY TOP
325	3-708-590-41	o	KEY TOP
326	3-708-590-51	o	KEY TOP
327	3-708-590-61	o	KEY TOP
328	3-708-590-71	o	KEY TOP
329	3-708-590-81	o	KEY TOP
330	3-708-590-91	o	KEY TOP
331	3-708-591-01	o	KEY TOP
332	3-708-591-11	o	KEY TOP
333	3-708-591-21	o	KEY TOP
334	3-708-591-31	o	KEY TOP
335	3-708-591-41	o	KEY TOP
336	3-708-591-51	o	KEY TOP
337	3-708-591-61	o	KEY TOP
338	3-708-591-71	o	KEY TOP
339	3-708-594-31	o	KEY TOP
340	3-708-594-41	o	KEY TOP
341	3-708-594-51	o	KEY TOP
342	3-708-596-11	o	KEY TOP
343	3-708-596-21	o	KEY TOP
344	3-708-597-61	o	KEY TOP
345	3-708-597-71	o	KEY TOP
346	3-708-598-01	o	KEY TOP
347	3-708-598-11	o	KEY TOP
348	3-708-598-21	o	KEY TOP
349	3-708-598-31	o	KEY TOP
350	3-708-598-41	o	KEY TOP
351	3-708-598-51	o	KEY TOP
352	3-708-598-61	o	KEY TOP
353	3-708-598-71	o	KEY TOP
354	3-708-599-11	o	KEY TOP
355	3-708-601-21	o	KEY TOP
356	3-708-601-31	o	KEY TOP
357	3-708-604-21	o	KEY TOP
358	3-708-604-31	o	KEY TOP
359	3-708-604-41	o	KEY TOP
360	3-708-604-51	o	KEY TOP
361	3-897-313-01	s	BOSS (17.2), RELAY
362	4-360-293-00	o	SPACER, BOSS
363	4-812-134-11	s	RIVET NYLON, 3.5
364	4-853-743-00	o	BOSS

LOCATIONS OF KEY TOP
KY-241 BOARD

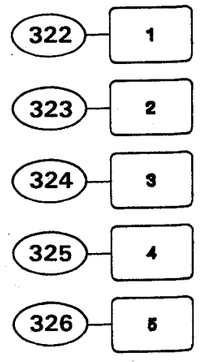

LOCATIONS OF KEY TOP
KY-242 BOARD

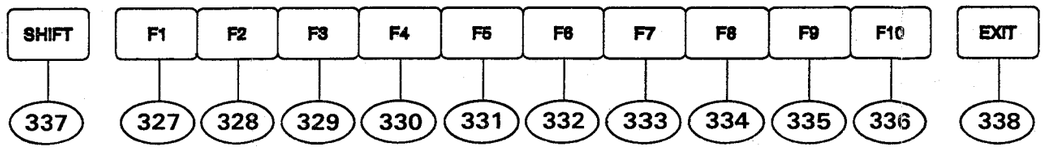

LOCATIONS OF KEY TOP
KY-245 BOARD

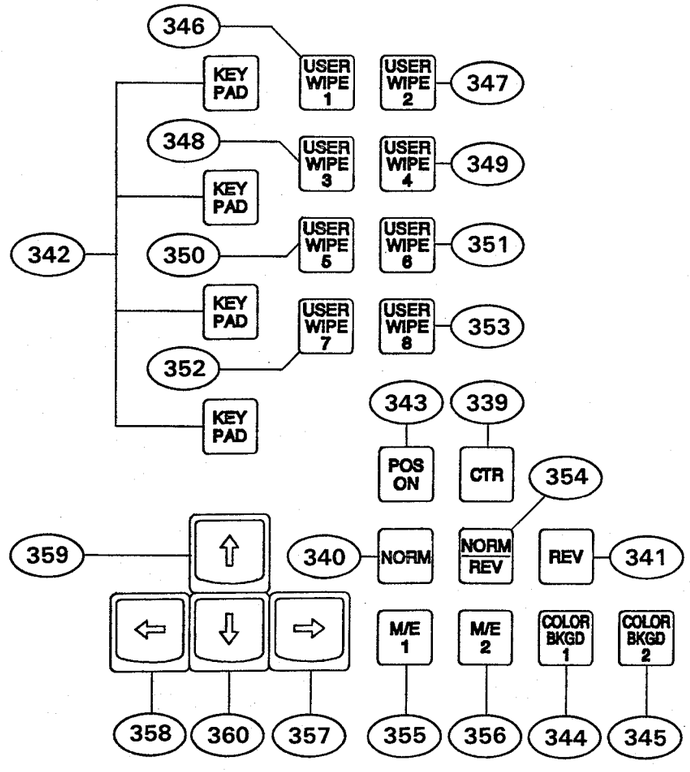

OPERATION UNIT-3

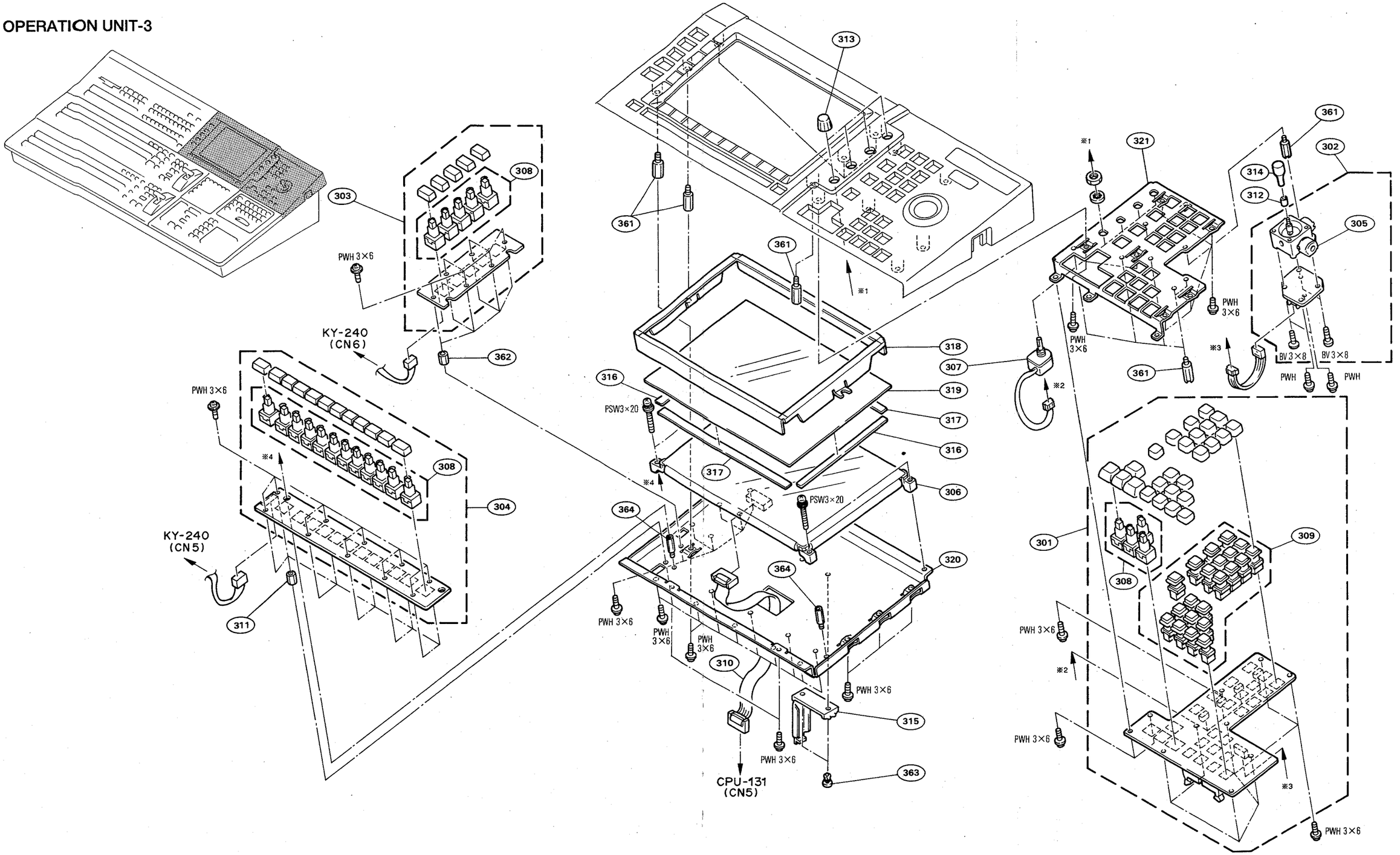

LOCATIONS OF KEY TOP
KY-243 BOARD

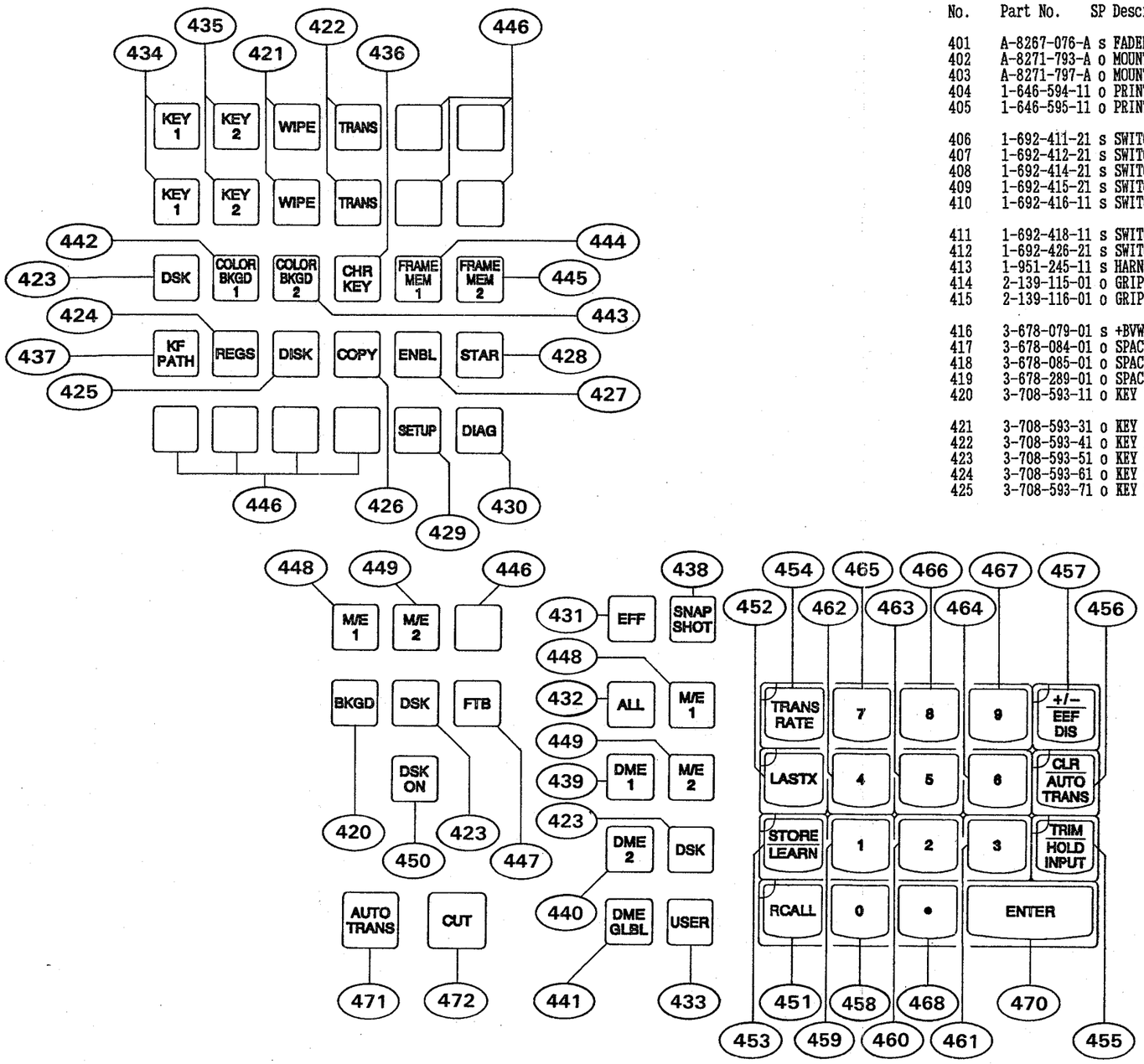

OPERATION UNIT 4

No.	Part No.	SP	Description
401	A-8267-076-A	s	FADER ASSY
402	A-8271-793-A	o	MOUNTED CIRCUIT BOARD, KY-243
403	A-8271-797-A	o	MOUNTED CIRCUIT BOARD, IF-404
404	1-646-594-11	o	PRINTED CIRCUIT BOARD, LE-113
405	1-646-595-11	o	PRINTED CIRCUIT BOARD, LE-114
406	1-692-411-21	s	SWITCH, PUSH
407	1-692-412-21	s	SWITCH, PUSH
408	1-692-414-21	s	SWITCH, PUSH
409	1-692-415-21	s	SWITCH, PUSH
410	1-692-416-11	s	SWITCH, PUSH
411	1-692-418-11	s	SWITCH, PUSH
412	1-692-426-21	s	SWITCH, PUSH
413	1-951-245-11	s	HARNESS (KY245)
414	2-139-115-01	o	GRIP (B), FADER
415	2-139-116-01	o	GRIP (A), FADER
416	3-678-079-01	s	+BVWH 3X8 GIZA TITE
417	3-678-084-01	o	SPACER(1),PCB
418	3-678-085-01	o	SPACER(2),PCB
419	3-678-289-01	o	SPACER (3)
420	3-708-593-11	o	KEY TOP
421	3-708-593-31	o	KEY TOP
422	3-708-593-41	o	KEY TOP
423	3-708-593-51	o	KEY TOP
424	3-708-593-61	o	KEY TOP
425	3-708-593-71	o	KEY TOP
426	3-708-593-81	o	KEY TOP
427	3-708-593-91	o	KEY TOP
428	3-708-594-01	o	KEY TOP
429	3-708-594-11	o	KEY TOP
430	3-708-594-21	o	KEY TOP
431	3-708-595-21	o	KEY TOP
432	3-708-595-31	o	KEY TOP
433	3-708-595-41	o	KEY TOP
434	3-708-595-51	o	KEY TOP
435	3-708-595-61	o	KEY TOP
436	3-708-595-71	o	KEY TOP
437	3-708-595-81	o	KEY TOP
438	3-708-597-11	o	KEY TOP
439	3-708-597-21	o	KEY TOP
440	3-708-597-31	o	KEY TOP
441	3-708-597-41	o	KEY TOP
442	3-708-597-61	o	KEY TOP
443	3-708-597-71	o	KEY TOP
444	3-708-597-81	o	KEY TOP
445	3-708-597-91	o	KEY TOP
446	3-708-599-31	o	KEY TOP
447	3-708-599-51	o	KEY TOP
448	3-708-601-21	o	KEY TOP
449	3-708-601-31	o	KEY TOP
450	3-708-601-41	o	KEY TOP
451	3-708-602-11	o	KEY TOP
452	3-708-602-21	o	KEY TOP
453	3-708-602-31	o	KEY TOP
454	3-708-602-41	o	KEY TOP
455	3-708-602-52	o	KEY TOP
456	3-708-602-61	o	KEY TOP
457	3-708-602-71	o	KEY TOP
458	3-708-603-11	o	KEY TOP
459	3-708-603-21	o	KEY TOP
460	3-708-603-31	o	KEY TOP
461	3-708-603-41	o	KEY TOP
462	3-708-603-51	o	KEY TOP
463	3-708-603-61	o	KEY TOP
464	3-708-603-71	o	KEY TOP
465	3-708-603-81	o	KEY TOP
466	3-708-603-91	o	KEY TOP
467	3-708-604-01	o	KEY TOP
468	3-708-604-11	o	KEY TOP
469	3-708-605-01	o	KEY TOP
470	3-708-607-11	o	KEY TOP
471	3-708-608-11	o	KEY TOP
472	3-708-608-21	o	KEY TOP

OPERATION UNIT-4

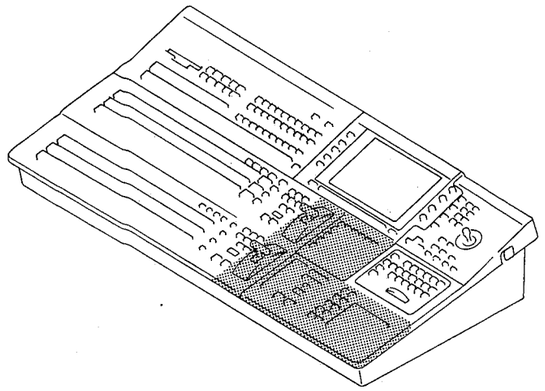

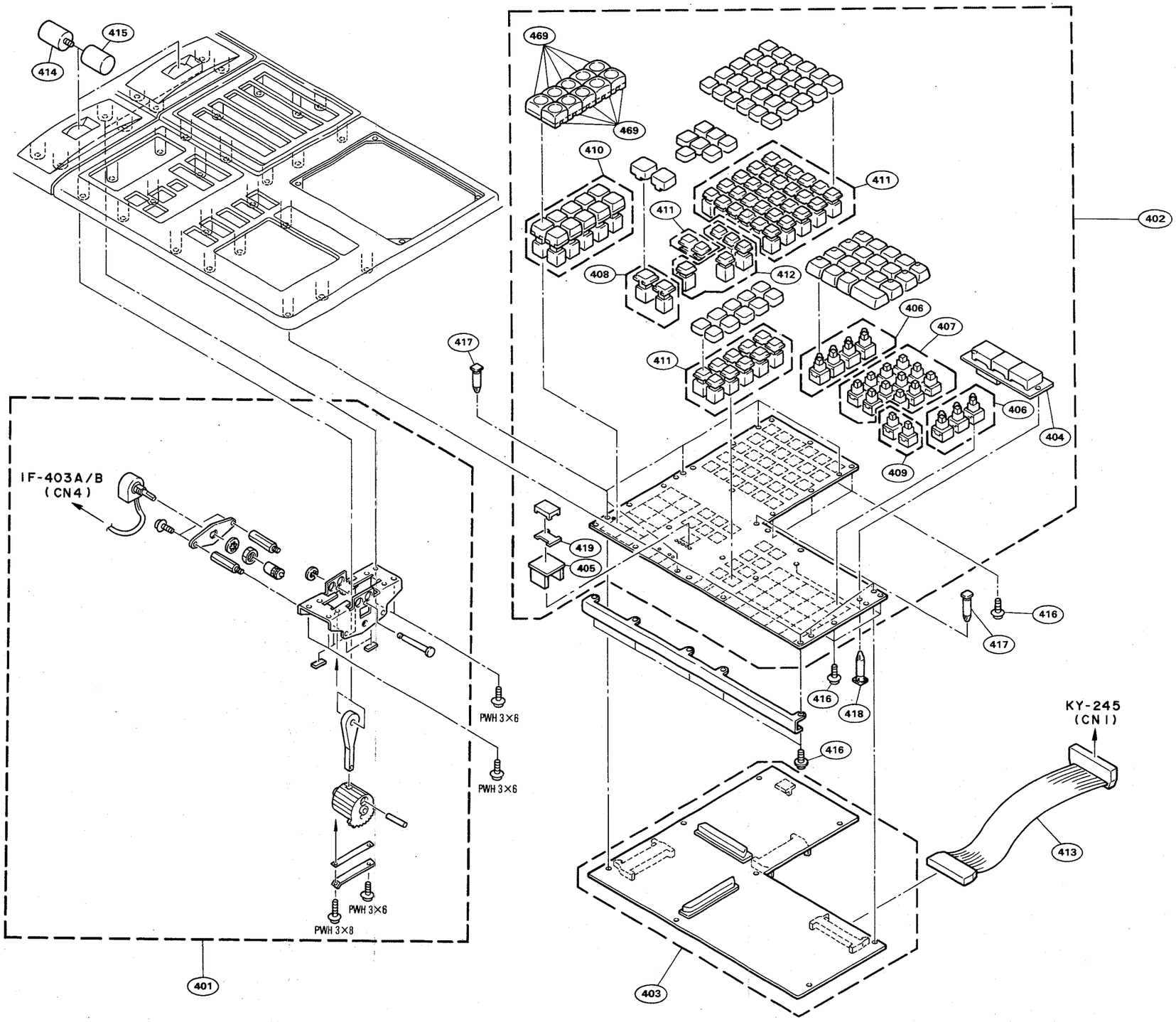

OPERATION UNIT-5
(BKDS-6050)

LOCATIONS OF KEY TOP
KY-244 BOARD

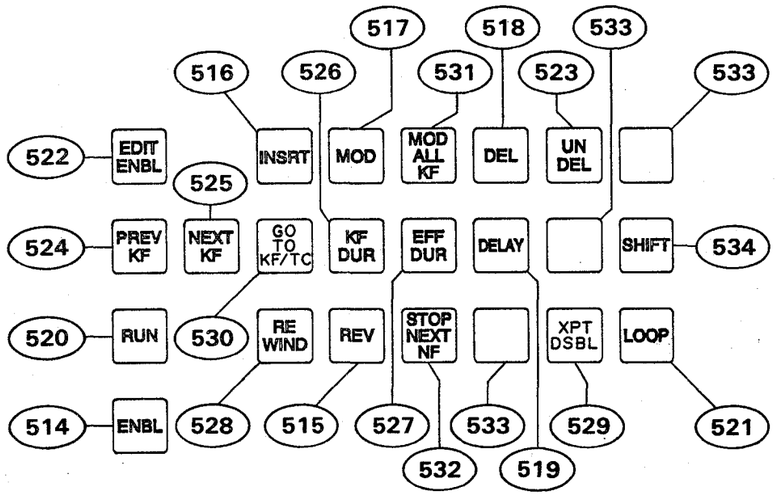

OPERATION UNIT 5 (BKDS-6050)

No.	Part No.	SP	Description
501	A-8271-899-A	o	MOUNTED CIRCUIT BOARD, IF-418
502	A-8271-900-A	o	MOUNTED CIRCUIT BOARD, KY-244
503	1-466-955-11	s	ENCODER, ROTARY
504	1-692-418-11	s	SWITCH, PUSH
505	3-678-071-02	o	PANEL, BLANK (FOR BKDS-6010)
506	3-678-085-01	o	SPACER (2), PCB
507	3-678-096-02	o	SHEET, BLANK (FOR BKDS-6010)
508	3-678-294-01	o	BRACKET(1),DIAL
509	3-678-295-01	o	BRACKET(2),DIAL
510	3-678-296-01	o	PANEL,KEY FRAME
511	3-678-297-01	o	SHEET, KF
512	3-678-298-01	o	SUPPORT
513	3-678-299-01	o	DIAL
514	3-708-593-91	o	KEY TOP
515	3-708-594-51	o	KEY TOP
516	3-708-594-61	o	KEY TOP
517	3-708-594-71	o	KEY TOP
518	3-708-594-81	o	KEY TOP
519	3-708-594-91	o	KEY TOP
520	3-708-595-01	o	KEY TOP
521	3-708-595-11	o	KEY TOP
522	3-708-596-31	o	KEY TOP
523	3-708-596-41	o	KEY TOP
524	3-708-596-51	o	KEY TOP
525	3-708-596-61	o	KEY TOP
526	3-708-596-71	o	KEY TOP
527	3-708-596-81	o	KEY TOP
528	3-708-596-91	o	KEY TOP
529	3-708-597-02	o	KEY TOP
530	3-708-598-51	o	KEY TOP
531	3-708-598-81	o	KEY TOP
532	3-708-599-01	o	KEY TOP
533	3-708-599-31	o	KEY TOP
534	3-708-599-41	o	KEY TOP
535	3-711-018-11	o	STAND OFF-BRAKE BAND GUIDE (FOR BKDS-6010)

9-20

OPERATION UNIT-5
(BKDS-6050)

OPERATION UNIT-5
(BKDS-6050)

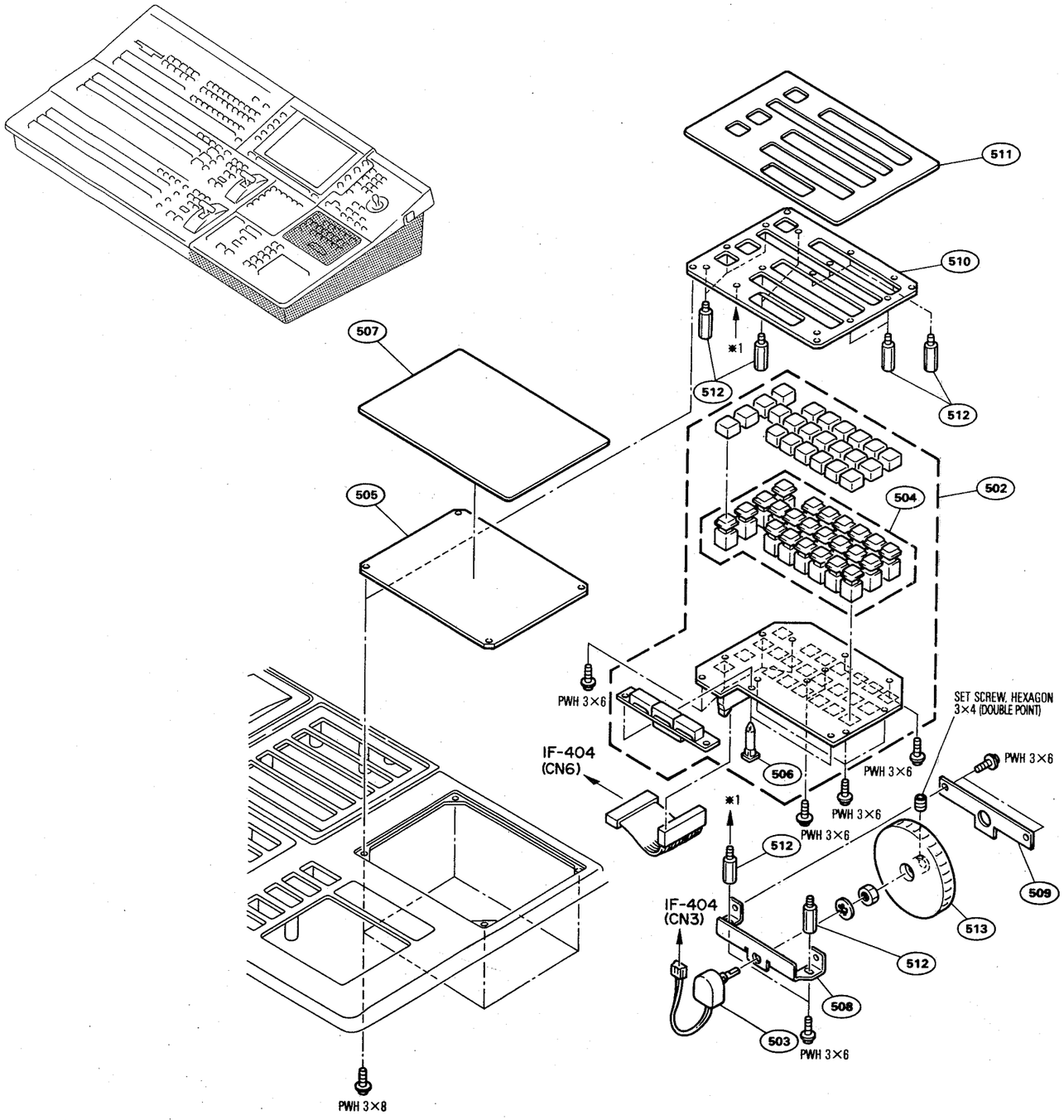

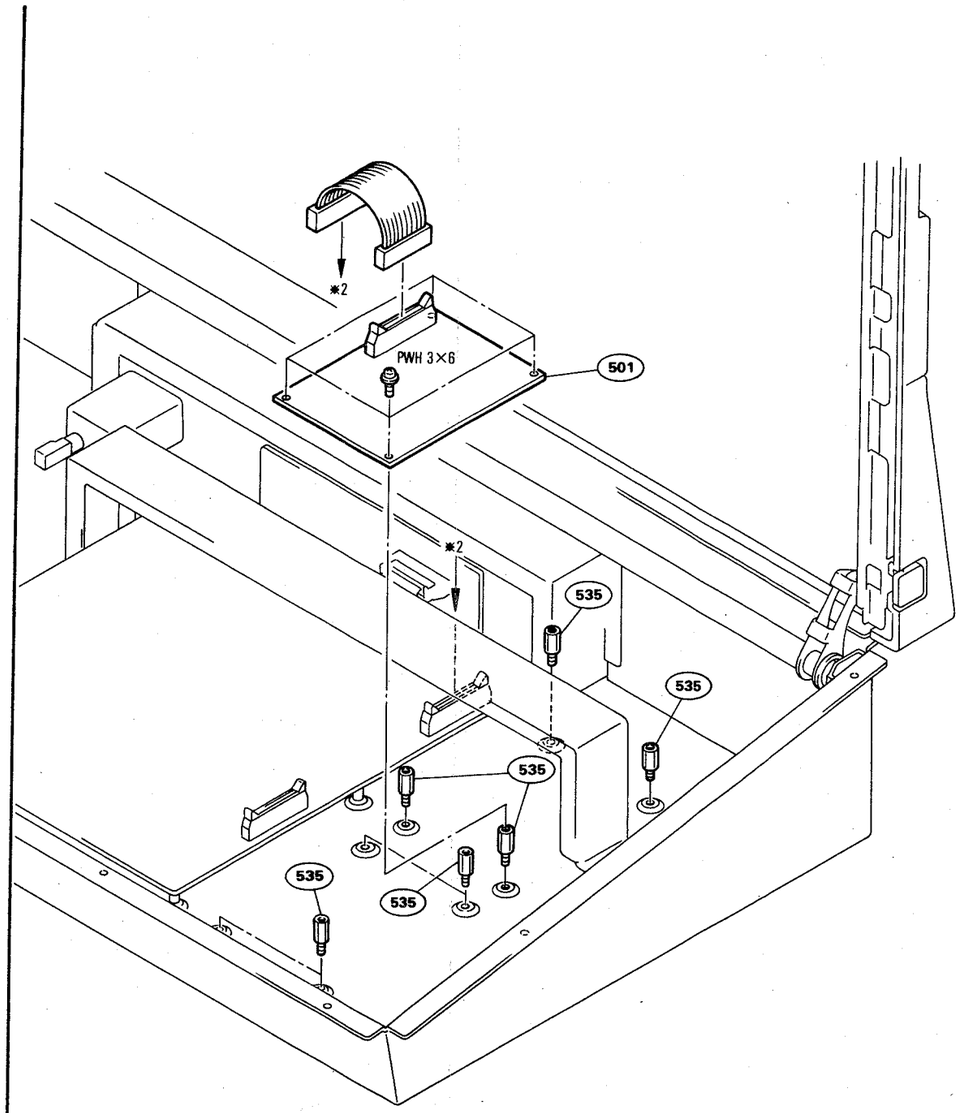

9-21

9-4. ELECTRICAL PARTS LIST

CAPACITOR, ELECT

Part No.	SP	Description
1-126-392-11	s	ELECT, CHIP 100uF 20% 6.3V
1-126-394-11	s	ELECT, CHIP 10uF 20% 16V

CAPACITOR, CHIP CERAMIC

Part No.	SP	Description
1-163-038-00	s	CERAMIC, CHIP 0.1uF 25V
1-164-004-11	s	CERAMIC, CHIP 0.1uF 10% 25V

RESISTOR, CHIP METAL

Part No.	SP	Description
1-216-309-00	s	METAL, CHIP 5.6 5% 1/10W
1-216-603-11	s	METAL, CHIP 10 0.5% 1/10W
1-216-611-11	s	METAL, CHIP 22 0.5% 1/10W
1-216-624-11	s	METAL, CHIP 75 0.5% 1/10W
1-216-627-11	s	METAL, CHIP 100 0.5% 1/10W
1-216-635-11	s	METAL, CHIP 220 0.5% 1/10W
1-216-639-11	s	METAL, CHIP 330 0.5% 1/10W
1-216-645-11	s	METAL, CHIP 560 0.5% 1/10W
1-216-646-11	s	METAL, CHIP 620 0.5% 1/10W
1-216-651-11	s	METAL, CHIP 1K 0.5% 1/10W
1-216-658-11	s	METAL, CHIP 2K 0.5% 1/10W
1-216-675-11	s	METAL, CHIP 10K 0.5% 1/10W
1-216-699-11	s	METAL, CHIP 100K 0.5% 1/10W

BD-22 BOARD

Ref. No. or Q'ty	Part No.	SP	Description
2pcs	3-166-184-01	o	LEVER, PC BOARD
1pc	3-179-230-01	o	JOINT
2pcs	7-626-320-11	s	PIN, SPRING 3X8
3pcs	7-682-903-01	s	SCREW +PWH 3X5
8pcs	7-685-104-19	s	SCREW +P 2X6 TYPE2 SLIT
CN112	1-695-640-31	s	CONNECTOR, FPC 13P
CN212	1-695-640-31	s	CONNECTOR, FPC 13P
CNA1	1-750-250-11	o	CONNECTOR, BB 50P, MALE
CNB1	1-750-250-11	o	CONNECTOR, BB 50P, MALE
CND1	1-750-250-11	o	CONNECTOR, BB 50P, MALE
IC11	8-759-057-32	s	IC CAT35C104K
IC119	8-759-504-98	s	IC CXD8056Q
IC120	8-759-504-98	s	IC CXD8056Q
IC121	8-759-323-08	s	IC HM63021FP-28
IC122	8-759-323-08	s	IC HM63021FP-28
IC123	8-759-323-08	s	IC HM63021FP-28
IC124	8-759-323-08	s	IC HM63021FP-28
IC125	8-759-504-98	s	IC CXD8056Q
IC126	8-759-323-08	s	IC HM63021FP-28
IC127	8-759-323-08	s	IC HM63021FP-28
IC128	8-759-323-08	s	IC HM63021FP-28
IC129	8-759-323-08	s	IC HM63021FP-28
IC130	8-759-504-98	s	IC CXD8056Q
IC144	8-759-244-75	s	IC TC74AC541F
IC219	8-759-504-98	s	IC CXD8056Q
IC220	8-759-504-98	s	IC CXD8056Q
IC221	8-759-323-08	s	IC HM63021FP-28
IC222	8-759-323-08	s	IC HM63021FP-28
IC223	8-759-323-08	s	IC HM63021FP-28
IC224	8-759-323-08	s	IC HM63021FP-28
IC225	8-759-504-98	s	IC CXD8056Q
IC226	8-759-323-08	s	IC HM63021FP-28
IC227	8-759-323-08	s	IC HM63021FP-28
IC228	8-759-323-08	s	IC HM63021FP-28
IC229	8-759-323-08	s	IC HM63021FP-28
IC230	8-759-504-98	s	IC CXD8056Q
IC244	8-759-244-75	s	IC TC74AC541F

CN-311 BOARD

Ref. No. or Q'ty	Part No.	SP	Description
CN1	1-580-356-11	s	CONNECTOR, BNC, FEMALE "ME1 OUTPUTS PGM"
CN2	1-580-356-11	s	CONNECTOR, BNC, FEMALE "ME2 OUTPUTS PGM"
CN3	1-580-356-11	s	CONNECTOR, BNC, FEMALE "PGM OUTPUTS 1"
CN4	1-580-356-11	s	CONNECTOR, BNC, FEMALE "PGM OUTPUTS 2"
CN5	1-580-356-11	s	CONNECTOR, BNC, FEMALE "ASSIGN OUTPUTS 1"
CN6	1-580-356-11	s	CONNECTOR, BNC, FEMALE "AUX BUS OUTPUTS 1"
CN7	1-580-356-11	s	CONNECTOR, BNC, FEMALE "AUX BUS OUTPUTS 3"
CN8	1-580-356-11	s	CONNECTOR, BNC, FEMALE "AUX BUS OUTPUTS 5"
CN11	1-580-356-11	s	CONNECTOR, BNC, FEMALE "PGM OUTPUTS 3"
CN12	1-580-356-11	s	CONNECTOR, BNC, FEMALE "PGM OUTPUTS 4"
CN13	1-580-356-11	s	CONNECTOR, BNC, FEMALE "ASSIGN OUTPUTS 2"
CN14	1-580-356-11	s	CONNECTOR, BNC, FEMALE "AUX BUS OUTPUTS 2"
CN15	1-580-356-11	s	CONNECTOR, BNC, FEMALE "AUX BUS OUTPUTS 4"
CN16	1-580-356-11	s	CONNECTOR, BNC, FEMALE "AUX BUS OUTPUTS 6"
CNZ1	1-563-337-11	s	CONNECTOR, DIN 96P, FEMALE

NOTE: Please see page 9-1 for the parts that are not listed in the parts list.

CN-312(A) BOARD

Ref. No. or Q'ty	Part No.	SP	Description
CN1	1-580-356-11	s	CONNECTOR, BNC, FEMALE "PRIMARY INPUTS 1"
CN2	1-580-356-11	s	CONNECTOR, BNC, FEMALE "PRIMARY INPUTS 2"
CN3	1-580-356-11	s	CONNECTOR, BNC, FEMALE "PRIMARY INPUTS 3"
CN4	1-580-356-11	s	CONNECTOR, BNC, FEMALE "PRIMARY INPUTS 4"
CN5	1-580-356-11	s	CONNECTOR, BNC, FEMALE "PRIMARY INPUTS 5"
CN6	1-580-356-11	s	CONNECTOR, BNC, FEMALE "PRIMARY INPUTS 6"
CN7	1-580-356-11	s	CONNECTOR, BNC, FEMALE "PRIMARY INPUTS 7"
CN8	1-580-356-11	s	CONNECTOR, BNC, FEMALE "PRIMARY INPUTS 8"
CN9	1-580-356-11	s	CONNECTOR, BNC, FEMALE "PRIMARY INPUTS 9"
CN10	1-580-356-11	s	CONNECTOR, BNC, FEMALE "PRIMARY INPUTS 10"
CN11	1-580-356-11	s	CONNECTOR, BNC, FEMALE "PRIMARY INPUTS 11"
CN12	1-580-356-11	s	CONNECTOR, BNC, FEMALE "PRIMARY INPUTS 12"
CN13	1-580-356-11	s	CONNECTOR, BNC, FEMALE "PRIMARY INPUTS 13"
CN14	1-580-356-11	s	CONNECTOR, BNC, FEMALE "PRIMARY INPUTS 14"
CN15	1-580-356-11	s	CONNECTOR, BNC, FEMALE "PRIMARY INPUTS 15"
CN16	1-580-356-11	s	CONNECTOR, BNC, FEMALE "PRIMARY INPUTS 16"
CNZ1	1-563-337-11	s	CONNECTOR, DIN 96P, FEMALE
CNZ2	1-563-337-11	s	CONNECTOR, DIN 96P, FEMALE

CN-312(B) BOARD

Ref. No. or Q'ty	Part No.	SP	Description
CN1	1-580-356-11	s	CONNECTOR, BNC, FEMALE "PRIMARY INPUTS 17"
CN2	1-580-356-11	s	CONNECTOR, BNC, FEMALE "PRIMARY INPUTS 18"
CN3	1-580-356-11	s	CONNECTOR, BNC, FEMALE "PRIMARY INPUTS 19"
CN4	1-580-356-11	s	CONNECTOR, BNC, FEMALE "PRIMARY INPUTS 20"
CN5	1-580-356-11	s	CONNECTOR, BNC, FEMALE "PRIMARY INPUTS 21"
CN6	1-580-356-11	s	CONNECTOR, BNC, FEMALE "PRIMARY INPUTS 22"
CN7	1-580-356-11	s	CONNECTOR, BNC, FEMALE "PRIMARY INPUTS 23"
CN8	1-580-356-11	s	CONNECTOR, BNC, FEMALE "PRIMARY INPUTS 24"
CN9	1-580-356-11	s	CONNECTOR, BNC, FEMALE "PRIMARY INPUTS 25"
CN10	1-580-356-11	s	CONNECTOR, BNC, FEMALE "PRIMARY INPUTS 26"
CN11	1-580-356-11	s	CONNECTOR, BNC, FEMALE "PRIMARY INPUTS 27"
CN12	1-580-356-11	s	CONNECTOR, BNC, FEMALE "PRIMARY INPUTS 28"
CN13	1-580-356-11	s	CONNECTOR, BNC, FEMALE "PRIMARY INPUTS 29"
CN14	1-580-356-11	s	CONNECTOR, BNC, FEMALE "PRIMARY INPUTS 30"
CN15	1-580-356-11	s	CONNECTOR, BNC, FEMALE "PRIMARY INPUTS 31"
CN16	1-580-356-11	s	CONNECTOR, BNC, FEMALE "PRIMARY INPUTS 32"
CNZ1	1-563-337-11	s	CONNECTOR, DIN 96P, FEMALE
CNZ2	1-563-337-11	s	CONNECTOR, DIN 96P, FEMALE

NOTE: Please see page 9-1 for the parts that are not listed in the parts list.

CN-503 BOARD

Ref. No. or Q'ty	Part No.	SP	Description
CN1	1-580-356-11	s	CONNECTOR, BNC, FEMALE "CHROMAKEY INPUTS CH-1 Y/G"
CN2	1-580-356-11	s	CONNECTOR, BNC, FEMALE "CHROMAKEY INPUTS CH-1 B-Y/B"
CN3	1-580-356-11	s	CONNECTOR, BNC, FEMALE "CHROMAKEY INPUTS CH-1 R-Y/R"
CN4	1-580-356-11	s	CONNECTOR, BNC, FEMALE "CHROMAKEY INPUTS CH-1 SYNC"
CN5	1-580-356-11	s	CONNECTOR, BNC, FEMALE "CHROMAKEY INPUTS CH-2 Y/G"
CN6	1-580-356-11	s	CONNECTOR, BNC, FEMALE "CHROMAKEY INPUTS CH-2 B-Y/B"
CN7	1-580-356-11	s	CONNECTOR, BNC, FEMALE "CHROMAKEY INPUTS CH-2 R-Y/R"
CN8	1-580-356-11	s	CONNECTOR, BNC, FEMALE "CHROMAKEY INPUTS CH-2 SYNC"
CNZ1	1-563-337-11	s	CONNECTOR, DIN 96P, FEMALE

CN-789 BOARD

Ref. No. or Q'ty	Part No.	SP	Description
1pc	1-646-597-11	o	PRINTED CIRCUIT BOARD, CN-789
1pc	3-678-069-01	o	PANEL, CN
14pcs	3-673-910-21	o	SCREW, CONNECTOR
5pcs	7-682-947-01	s	SCREW +PSW 3X6
CN1	1-568-064-11	o	CONNECTOR, TX 50P, MALE
CN2	1-563-890-21	s	CONNECTOR, D-SUB 9P, FEMALE "SWITCHER"
CN3	1-563-890-21	s	CONNECTOR, D-SUB 9P, FEMALE "TEST"
CN4	1-563-890-21	s	CONNECTOR, D-SUB 9P, FEMALE "DME"
CN5	1-563-890-21	s	CONNECTOR, D-SUB 9P, FEMALE "REMOTE"
CN6	1-563-890-21	s	CONNECTOR, D-SUB 9P, FEMALE "TERMINAL 1"
CN7	1-563-890-21	s	CONNECTOR, D-SUB 9P, FEMALE "TERMINAL 2"
CN8	1-563-890-21	s	CONNECTOR, D-SUB 9P, FEMALE "TERMINAL 3"

CN-790 BOARD

Ref. No. or Q'ty	Part No.	SP	Description
1pc	1-646-598-11	o	PRINTED CIRCUIT BOARD, CN-790
CN101	1-564-241-00	o	CONNECTOR 4P, MALE
CN102	1-564-241-00	o	CONNECTOR 4P, MALE
CN103	1-564-243-00	o	CONNECTOR, VH 6P, MALE
CN104	1-564-243-00	o	CONNECTOR, VH 6P, MALE
CN105	1-564-243-00	o	CONNECTOR, VH 6P, MALE
CN106	1-564-243-00	o	CONNECTOR, VH 6P, MALE
CN107	1-564-243-00	o	CONNECTOR, VH 6P, MALE
D1	8-719-940-99	s	LED SLR-34VC3, RED
D2	8-719-940-99	s	LED SLR-34VC3, RED
R1	1-249-411-11	s	CARBON 330 5% 1/4W
R2	1-249-417-11	s	CARBON 1K 5% 1/4W

NOTE: Please see page 9-1 for the parts that are not listed in the parts list.

CN-843 BOARD

Ref. No. or Q'ty	Part No.	SP	Description
CN1	1-580-356-11	s	CONNECTOR, BNC, FEMALE "REF INPUT"
CN2	1-580-356-11	s	CONNECTOR, BNC, FEMALE "REF INPUT"
CN3	1-580-356-11	s	CONNECTOR, BNC, FEMALE "MONITOR OUTPUT 1/Y"
CN4	1-580-356-11	s	CONNECTOR, BNC, FEMALE "MONITOR OUTPUT 2/B-Y"
CN5	1-580-356-11	s	CONNECTOR, BNC, FEMALE "MONITOR OUTPUT 3/R-Y"
CN6	1-580-356-11	s	CONNECTOR, BNC, FEMALE "REF OUTPUT"
CNA1	1-563-890-21	s	CONNECTOR, D-SUB 9P, FEMALE "DME1 (AUX BUS)"
CNC1	1-563-890-21	s	CONNECTOR, D-SUB 9P, FEMALE "CONTROL"
CND1	1-563-890-21	s	CONNECTOR, D-SUB 9P, FEMALE "DME1 (AUX BUS)"
CNE1	1-563-890-21	s	CONNECTOR, D-SUB 9P, FEMALE "EDITOR A"
CNE2	1-563-890-21	s	CONNECTOR, D-SUB 9P, FEMALE "EDITOR B"
CNG1	1-563-891-21	s	CONNECTOR, D-SUB 25P, FEMALE "GP1"
CNM1	1-563-890-21	s	CONNECTOR, D-SUB 9P, FEMALE "SERIAL TALLY"
CNT1	1-563-891-21	s	CONNECTOR, D-SUB 25P, FEMALE "TERMINAL"
CNT2	1-563-384-11	s	CONNECTOR, AMPHE 50P, FEMALE "EXT"
CNU1	1-563-890-21	s	CONNECTOR, D-SUB 9P, FEMALE "USR"

NOTE: Please see page 9-1 for the parts that are not listed in the parts list.

CPU-131 BOARD

Ref. No. or Q'ty	Part No.	SP	Description
1pc	A-8271-798-A	o	MOUNTED CIRCUIT BOARD, CPU-131
BZ1	1-529-025-00	s	BUZZER
C202	1-126-396-11	s	ELECT, CHIP 47uF 20% 16V
C204	1-126-396-11	s	ELECT, CHIP 47uF 20% 16V
C211	1-107-210-00	s	MICA 22PF 5% 500V
C212	1-107-210-00	s	MICA 22PF 5% 500V
C220	1-126-396-11	s	ELECT, CHIP 47uF 20% 16V
C222	1-126-396-11	s	ELECT, CHIP 47uF 20% 16V
C223	1-164-232-11	s	CERAMIC 0.01uF 10% 100V
C235	1-107-202-00	s	MICA 10PF 5% 500V
C236	1-107-046-00	s	MICA 4.7PF 500V
C237	1-163-011-11	s	CERAMIC 0.0015uF 10% 50V
CN1	1-564-243-00	o	CONNECTOR, VH 6P, MALE
CN2	1-506-700-11	o	HEADDER 34P, MALE
CN3	1-568-064-11	o	CONNECTOR, TX 50P, MALE
CN4	1-568-064-11	o	CONNECTOR, TX 50P, MALE
CN5	1-506-697-11	o	HEADDER 16P, MALE
CN6	1-565-689-11	o	CONNECTOR, TX 60P, MALE
CN7	1-565-689-11	o	CONNECTOR, TX 60P, MALE
CN8	1-506-470-21	o	CONNECTOR 5P, MALE
CNI12	1-251-071-11	s	SOCKET, IC (PGA) 100P
CNI13	1-526-656-00	o	SOCKET, IC (DP) 20P
CNI14	1-526-816-21	o	SOCKET, IC (DP) 24P
CNI15	1-526-656-00	o	SOCKET, IC (DP) 20P
CNI16	1-526-656-00	o	SOCKET, IC (DP) 20P
CNI17	1-526-816-21	o	SOCKET, IC (DP) 24P
CNI18	1-526-656-00	o	SOCKET, IC (DP) 20P
CNI34	1-526-656-00	o	SOCKET, IC (DP) 20P
CNI37	1-526-660-21	o	SOCKET, IC 32P
CNI38	1-526-659-00	o	SOCKET, IC 28P
CNI47	1-526-660-21	o	SOCKET, IC 32P
CNI48	1-526-660-21	o	SOCKET, IC 32P
CNI49	1-526-660-21	o	SOCKET, IC 32P
CNI50	1-526-660-21	o	SOCKET, IC 32P
CNI51	1-526-660-21	o	SOCKET, IC 32P
CNI52	1-526-660-21	o	SOCKET, IC 32P
CNI53	1-526-660-21	o	SOCKET, IC 32P
CNI54	1-526-660-21	o	SOCKET, IC 32P
CNI81	1-526-660-21	o	SOCKET, IC 32P
CNI85	1-526-656-00	o	SOCKET, IC (DP) 20P
CNI98	1-526-660-21	o	SOCKET, IC 32P
CNI103	1-526-656-00	o	SOCKET, IC (DP) 20P
CNI105	1-526-656-00	o	SOCKET, IC (DP) 20P
CNI109	1-526-659-00	o	SOCKET, IC 28P
CNI119	1-526-656-00	o	SOCKET, IC (DP) 20P
D2	8-719-940-99	s	LED SLR-34VC3, RED
D3	8-719-940-99	s	LED SLR-34VC3, RED
D4	8-719-940-99	s	LED SLR-34VC3, RED
D5	8-719-940-99	s	LED SLR-34VC3, RED
D6	8-719-940-99	s	LED SLR-34VC3, RED
D7	8-719-940-99	s	LED SLR-34VC3, RED
D8	8-719-940-99	s	LED SLR-34VC3, RED
D9	8-719-901-68	s	LED GL-6R202, RED
D10	8-719-400-18	s	DIODE MA152WK
D11	8-719-940-99	s	LED SLR-34VC3, RED
D12	8-719-940-99	s	LED SLR-34VC3, RED
D13	8-719-109-84	s	DIODE RD5.1ES-B1

(CPU-131 BOARD)

Ref. No. or Q'ty	Part No.	SP	Description
IC1	8-759-164-35	s	IC MAX691CWE
IC2	8-759-925-74	s	IC TC74HC04NS
IC3	8-759-927-46	s	IC SN74HC00NS
IC4	8-759-925-72	s	IC SN74HC02NS
IC5	8-759-927-46	s	IC SN74HC00NS
IC6	8-759-992-03	s	IC 74F38SJ
IC7	8-759-243-06	s	IC TC74AC04F
IC8	8-759-244-04	s	IC TC74AC163F
IC9	8-759-925-90	s	IC SN74HC74NS
IC10	8-759-243-09	s	IC TC74AC74F
IC11	8-759-926-74	s	IC SN74HC393NS
IC12	8-759-098-88	s	IC MC68EC020RP25
IC13	8-759-156-72	o	IC GAL16V8-CPU1301V1, PLD
IC14	8-759-156-73	o	IC GAL20V8-CPU1302V1, PLD
IC15	8-759-156-74	o	IC GAL16V8-CPU1303V1, PLD
IC16	8-759-156-75	o	IC GAL16V8-CPU1304V1, PLD
IC17	8-759-156-76	o	IC GAL20V8-CPU1305V1, PLD
IC18	8-759-156-77	o	IC GAL16V8-CPU1306V1, PLD
IC19	8-759-243-80	s	IC TC74ACT139F
IC20	8-759-244-77	s	IC TC74ACT541F
IC21	8-759-244-77	s	IC TC74ACT541F
IC22	8-759-244-77	s	IC TC74ACT541F
IC23	8-759-244-77	s	IC TC74ACT541F
IC24	8-759-244-27	s	IC TC74ACT245F
IC25	8-759-244-27	s	IC TC74ACT245F
IC26	8-759-244-27	s	IC TC74ACT245F
IC27	8-759-244-77	s	IC TC74ACT541F
IC28	8-759-244-77	s	IC TC74ACT541F
IC29	8-759-244-77	s	IC TC74ACT541F
IC30	8-759-244-27	s	IC TC74ACT245F
IC31	8-759-244-27	s	IC TC74ACT245F
IC32	8-759-244-27	s	IC TC74ACT245F
IC33	8-759-244-27	s	IC TC74ACT245F
IC34	8-759-156-78	o	IC GAL16V8-CPU1307V1, PLD
IC35	8-759-243-80	s	IC TC74ACT139F
IC36	8-759-243-80	s	IC TC74ACT139F
IC37	8-759-156-86	o	IC M27C1001-MAINV1.00, EPROM
IC38	8-759-720-67	s	IC X28C64PI
IC39	8-759-070-10	s	IC HM628128LFP-7
IC40	8-759-070-10	s	IC HM628128LFP-7
IC41	8-759-070-10	s	IC HM628128LFP-7
IC42	8-759-070-10	s	IC HM628128LFP-7
IC43	8-759-070-10	s	IC HM628128LFP-7
IC44	8-759-070-10	s	IC HM628128LFP-7
IC45	8-759-070-10	s	IC HM628128LFP-7
IC46	8-759-070-10	s	IC HM628128LFP-7
IC47	8-759-098-89	s	IC AM29F010-70PC
IC48	8-759-098-89	s	IC AM29F010-70PC
IC49	8-759-098-89	s	IC AM29F010-70PC
IC50	8-759-098-89	s	IC AM29F010-70PC
IC51	8-759-098-89	s	IC AM29F010-70PC
IC52	8-759-098-89	s	IC AM29F010-70PC
IC53	8-759-098-89	s	IC AM29F010-70PC
IC54	8-759-098-89	s	IC AM29F010-70PC
IC55	8-759-243-80	s	IC TC74ACT139F
IC56	8-759-243-06	s	IC TC74AC04F
IC57	8-759-243-06	s	IC TC74AC04F
IC58	8-759-998-41	s	IC MB89394-PF

(CPU-131 BOARD)

Ref. No. or Q'ty	Part No.	SP	Description
IC59	8-759-065-85	s	IC MAX232N
IC60	8-759-973-43	s	IC MB8421-90LPFQ
IC61	8-759-087-17	s	IC SN74HCT139ANS
IC62	8-759-555-91	s	IC HD647180FS-SIO-V1.1
IC64	8-759-244-71	s	IC TC74AC540F
IC65	8-759-008-57	s	IC MC34051P
IC66	8-759-938-68	s	IC CXD1095Q
IC67	8-759-044-95	s	IC MC14495P
IC68	8-759-044-95	s	IC MC14495P
IC69	8-759-098-13	s	IC HD63266F
IC70	8-759-008-57	s	IC MC34051P
IC71	8-759-239-55	s	IC TC74HC123AF
IC72	8-759-520-59	s	IC MB89322APFQ
IC73	8-759-243-92	s	IC TC74ACT157F
IC74	8-759-243-92	s	IC TC74ACT157F
IC75	8-759-243-92	s	IC TC74ACT157F
IC76	8-759-243-92	s	IC TC74ACT157F
IC77	8-759-045-20	s	IC MB84256A-10LPF
IC78	8-759-045-20	s	IC MB84256A-10LPF
IC79	8-759-244-27	s	IC TC74ACT245F
IC80	8-759-244-27	s	IC TC74ACT245F
IC81	8-759-156-87	o	IC M27C1001-FONTV1.00, EPROM
IC82	8-759-244-46	s	IC TC74AC299F
IC83	8-759-244-46	s	IC TC74AC299F
IC84	8-759-245-77	s	IC TC74ACT574F
IC85	8-759-156-79	o	IC GAL16V8-CPU1308V1, PLD
IC86	8-759-240-37	s	IC TC74HCT86AF
IC87	8-759-926-28	s	IC SN74HC174NS
IC88	8-759-926-64	s	IC SN74HC367ANS
IC89	8-759-520-59	s	IC MB89322APFQ
IC90	8-759-243-92	s	IC TC74ACT157F
IC91	8-759-243-92	s	IC TC74ACT157F
IC92	8-759-243-92	s	IC TC74ACT157F
IC93	8-759-243-92	s	IC TC74ACT157F
IC94	8-759-045-20	s	IC MB84256A-10LPF
IC95	8-759-045-20	s	IC MB84256A-10LPF
IC96	8-759-244-27	s	IC TC74ACT245F
IC97	8-759-244-27	s	IC TC74ACT245F
IC98	8-759-156-87	o	IC M27C1001-FONTV1.00, EPROM
IC99	8-759-244-46	s	IC TC74AC299F
IC100	8-759-244-46	s	IC TC74AC299F
IC101	8-759-243-06	s	IC TC74AC04F
IC102	8-759-244-04	s	IC TC74AC163F
IC103	8-759-156-80	o	IC GAL16V8-CPU1309V1, PLD
IC104	8-759-243-09	s	IC TC74AC74F
IC105	8-759-156-81	o	IC GAL16V8-CPU1310V1, PLD
IC106	8-759-243-39	s	IC TC74AC00F
IC107	8-759-973-43	s	IC MB8421-90LPFQ
IC108	8-759-510-88	s	IC MB8431-90LPFQ
IC109	8-759-156-88	o	IC M27C256-SUBV1.00, EPROM
IC110	8-759-045-20	s	IC MB84256A-10LPF
IC111	8-759-243-74	s	IC TC74AC138F
IC112	8-759-065-85	s	IC MAX232N
IC113	8-759-065-85	s	IC MAX232N
IC114	8-759-057-73	s	IC HD64180ZFS10
IC115	8-759-925-90	s	IC SN74HC74NS
IC116	8-759-244-75	s	IC TC74AC541F
IC117	8-759-244-75	s	IC TC74AC541F
IC118	8-759-244-25	s	IC TC74AC245F

NOTE: Please see page 9-1 for the parts that are not listed in the parts list.

(CPU-131 BOARD)

Ref. No. or Q'ty	Part No.	SP	Description
IC119	8-759-156-82	o	IC GAL16V8-CPU1311V1, PLD
IC120	8-759-243-78	s	IC TC74AC139F
IC121	8-759-243-39	s	IC TC74AC00F
IC122	8-759-243-62	s	IC TC74AC32F
IC123	8-759-985-60	s	IC 74AC273SJ
IC124	8-759-926-77	s	IC SN74HC541NS
IC125	8-759-244-25	s	IC TC74AC245F
IC126	8-759-244-75	s	IC TC74AC541F
IC127	8-759-244-50	s	IC TC74AC367F
IC128	8-759-923-65	s	IC AM26LS31CNS
R24	1-216-659-11	s	METAL, CHIP 2.2K 0.5% 1/10W
R25	1-216-659-11	s	METAL, CHIP 2.2K 0.5% 1/10W
R26	1-216-659-11	s	METAL, CHIP 2.2K 0.5% 1/10W
R27	1-216-659-11	s	METAL, CHIP 2.2K 0.5% 1/10W
R28	1-216-295-00	s	METAL, CHIP 0
R42	1-216-667-11	s	METAL, CHIP 4.7K 0.5% 1/10W
R55	1-216-683-11	s	METAL, CHIP 22K 0.5% 1/10W
R61	1-216-667-11	s	METAL, CHIP 4.7K 0.5% 1/10W
R65	1-216-659-11	s	METAL, CHIP 2.2K 0.5% 1/10W
R75	1-216-667-11	s	METAL, CHIP 4.7K 0.5% 1/10W
R76	1-216-667-11	s	METAL, CHIP 4.7K 0.5% 1/10W
R81	1-218-776-11	s	METAL, CHIP 1M 0.5% 1/10W
R132	1-216-667-11	s	METAL, CHIP 4.7K 0.5% 1/10W
RB1	1-231-407-00	s	RESISTOR BLOCK 2.2Kx8
RB2	1-231-407-00	s	RESISTOR BLOCK 2.2Kx8
RB3	1-231-407-00	s	RESISTOR BLOCK 2.2Kx8
RB4	1-231-385-00	s	RESISTOR BLOCK 4.7Kx8
RB5	1-231-405-00	s	RESISTOR BLOCK 1Kx8
RB6-11	1-231-410-00	s	RESISTOR BLOCK 10Kx8
RB12	1-231-385-00	s	RESISTOR BLOCK 4.7Kx8
RB13	1-231-385-00	s	RESISTOR BLOCK 4.7Kx8
RB14	1-231-385-00	s	RESISTOR BLOCK 4.7Kx8
RB15	1-231-385-00	s	RESISTOR BLOCK 4.7Kx8
RB16	1-231-385-00	s	RESISTOR BLOCK 4.7Kx8
RB17-19	1-231-410-00	s	RESISTOR BLOCK 10Kx8
RB20	1-231-385-00	s	RESISTOR BLOCK 4.7Kx8
S1	1-570-266-11	s	SWITCH, PUSH
S2	1-570-266-11	s	SWITCH, PUSH
S3	1-570-623-11	s	SWITCH, DIP 8-CKT
S4	1-570-266-11	s	SWITCH, PUSH
S5	1-570-623-11	s	SWITCH, DIP 8-CKT
X1	1-577-170-11	s	OSCILLATOR, CRYSTAL 50.00MHz
X2	1-567-787-11	s	OSCILLATOR, CRYSTAL 32.00000MHz
X3	1-567-812-11	s	RESONATOR, CERAMIC 12.288MHz
X5	1-579-888-11	s	RESONATOR, CERAMIC 18.432MHz

CPU-147 BOARD

Ref. No. or Q'ty	Part No.	SP	Description
1pc	A-8271-809-A	o	MOUNTED CIRCUIT BOARD, CPU-147
2pcs	3-166-184-01	o	LEVER, PC BOARD
2pcs	3-166-185-01	s	NUT, PLATE
2pcs	7-622-207-05	s	N 2.6, TYPE 2
2pcs	7-626-320-11	s	PIN, SPRING 3X8
6pcs	7-628-254-40	s	SCREW +PS 2.6X12
8pcs	7-682-948-01	s	SCREW +PSW 3X8
1pc	1-526-653-21	s	SOCKET, IC (DP) 14P
BT1	1-528-180-11	s	BATTERY, NICKEL-CADMIUM
C1	1-126-396-11	s	ELECT, CHIP 47uF 20% 16V
C2	1-126-396-11	s	ELECT, CHIP 47uF 20% 16V
C22	1-163-235-11	s	CERAMIC, CHIP 22PF 5% 50V
C23	1-163-235-11	s	CERAMIC, CHIP 22PF 5% 50V
C27	1-163-275-11	s	CERAMIC, CHIP 0.001uF 5% 50V
C28	1-163-251-11	s	CERAMIC, CHIP 100PF 5% 50V
C29	1-163-235-11	s	CERAMIC, CHIP 22PF 5% 50V
C30	1-163-235-11	s	CERAMIC, CHIP 22PF 5% 50V
C31	1-163-235-11	s	CERAMIC, CHIP 22PF 5% 50V
C32	1-163-235-11	s	CERAMIC, CHIP 22PF 5% 50V
C33	1-163-235-11	s	CERAMIC, CHIP 22PF 5% 50V
C34	1-163-235-11	s	CERAMIC, CHIP 22PF 5% 50V
CN1	1-564-133-11	o	CONNECTOR, FLAT CABLE 20P, MALE
CN2	1-506-484-11	s	CONNECTOR, 5P, MALE
CNI1	1-540-129-11	s	SOCKET, IC (PGA) 114P
CNI2	1-526-996-11	s	SOCKET, IC (PGA) 68P
CNI19	1-526-656-00	o	SOCKET, IC (DP) 20P
CNI20	1-526-656-00	o	SOCKET, IC (DP) 20P
CNI31	1-526-656-00	o	SOCKET, IC (DP) 20P
CNI98	1-540-069-11	s	SOCKET, IC 84P
CNI201	1-251-071-11	s	SOCKET, IC (PGA) 100P
CNI203	1-526-816-21	o	SOCKET, IC (DP) 24P
CNI204	1-526-656-00	o	SOCKET, IC (DP) 20P
CNI205	1-526-656-00	o	SOCKET, IC (DP) 20P
CNI206	1-526-816-21	o	SOCKET, IC (DP) 24P
CNI207	1-526-656-00	o	SOCKET, IC (DP) 20P
CNI208	1-526-816-21	o	SOCKET, IC (DP) 24P
CNI209	1-526-660-21	o	SOCKET, IC 32P
CNI210	1-526-660-21	o	SOCKET, IC 32P
CNI211	1-526-660-21	o	SOCKET, IC 32P
CNI212	1-526-660-21	o	SOCKET, IC 32P
CNI216	1-526-659-00	o	SOCKET, IC 28P
CNI217	1-526-660-21	o	SOCKET, IC 32P
CNX1	1-565-207-21	s	CONNECTOR, DIN 128P, MALE
CNY1	1-565-207-21	s	CONNECTOR, DIN 128P, MALE
CNZ1	1-506-748-11	o	CONNECTOR, DIN 96P, MALE
COP2	1-562-579-21	s	PLUG, SHORTING
COR1	1-566-391-11	o	CONNECTOR 12P, MALE
COR2	1-564-948-21	o	PIN, SHORTING
D1	8-719-400-35	s	LED LN35BP, GRN
D2	8-719-400-35	s	LED LN35BP, GRN
D3	8-719-400-35	s	LED LN35BP, GRN
D4	8-719-400-35	s	LED LN35BP, GRN
D5	8-719-800-60	s	LED TLR214, RED

NOTE: Please see page 9-1 for the parts that are not listed in the parts list.

(CPU-147 BOARD)

Ref. No. or Q'ty	Part No.	SP	Description
D6	8-719-982-04	s	DIODE ERB81-004
D7	8-719-400-35	s	LED LN35BP, GRN
D8	8-719-800-76	s	DIODE 1SS226
D9	8-719-800-76	s	DIODE 1SS226
D10	8-719-800-76	s	DIODE 1SS226
D11	8-719-800-76	s	DIODE 1SS226
D12	8-719-800-76	s	DIODE 1SS226
D13	8-719-800-76	s	DIODE 1SS226
D14	8-719-800-76	s	DIODE 1SS226
D15	8-719-800-76	s	DIODE 1SS226
D16	8-719-800-76	s	DIODE 1SS226
D17	8-719-800-76	s	DIODE 1SS226
D18	8-719-800-76	s	DIODE 1SS226
D19	8-719-800-76	s	DIODE 1SS226
D20	8-719-800-76	s	DIODE 1SS226
D21	8-719-800-76	s	DIODE 1SS226
D22	8-719-800-76	s	DIODE 1SS226
D23	8-719-800-76	s	DIODE 1SS226
D24	8-719-800-76	s	DIODE 1SS226
D25	8-719-800-76	s	DIODE 1SS226
D26	8-719-800-76	s	DIODE 1SS226
D27	8-719-400-35	s	LED LN35BP, GRN
D28	8-719-400-35	s	LED LN35BP, GRN
D29	8-719-400-35	s	LED LN35BP, GRN
D30	8-719-400-35	s	LED LN35BP, GRN
D31	8-719-400-35	s	LED LN35BP, GRN
D32	8-719-400-35	s	LED LN35BP, GRN
D33	8-719-400-35	s	LED LN35BP, GRN
D34	8-719-400-35	s	LED LN35BP, GRN
D35	8-719-821-58	s	DIODE 1SS271
D36	8-719-821-58	s	DIODE 1SS271
D37	8-719-821-58	s	DIODE 1SS271
D38	8-719-821-58	s	DIODE 1SS271
D39	8-719-821-58	s	DIODE 1SS271
D40	8-719-821-58	s	DIODE 1SS271
D41	8-719-821-58	s	DIODE 1SS271
D42	8-719-821-58	s	DIODE 1SS271
F1	⚠1-576-031-11	s	FUSE 10A 125V
F2	⚠1-576-031-11	s	FUSE 10A 125V
IC2	8-759-030-45	s	IC MC68882RC25
IC3	8-759-505-28	s	IC MAX691CPE
IC4	8-759-927-46	s	IC SN74HC00NS
IC5	8-759-243-09	s	IC TC74AC74F
IC7	8-759-243-39	s	IC TC74AC00F
IC8	8-759-992-03	s	IC 74F38SJ
IC9	8-759-243-62	s	IC TC74AC32F
IC10	8-759-926-74	s	IC SN74HC393NS
IC11	8-759-243-06	s	IC TC74AC04F
IC17	8-759-244-75	s	IC TC74AC541F
IC18	8-759-244-75	s	IC TC74AC541F
IC19	8-759-244-24	s	IC TC74AC245P
IC20	8-759-244-24	s	IC TC74AC245P
IC21	8-759-244-75	s	IC TC74AC541F
IC22	8-759-244-75	s	IC TC74AC541F
IC23	8-759-244-75	s	IC TC74AC541F
IC24	8-759-244-25	s	IC TC74AC245F
IC25	8-759-244-25	s	IC TC74AC245F
IC26	8-759-244-25	s	IC TC74AC245F

(CPU-147 BOARD)

Ref. No. or Q'ty	Part No.	SP	Description
IC27	8-759-244-25	s	IC TC74AC245F
IC31	8-759-159-92	o	IC GAL16V8-S-RAMDECV1, PLD
IC32	8-759-243-74	s	IC TC74AC138F
IC33	8-759-243-74	s	IC TC74AC138F
IC34	8-759-243-74	s	IC TC74AC138F
IC35	8-759-243-74	s	IC TC74AC138F
IC36	8-759-045-27	s	IC UPD431000AGW-70L
IC37	8-759-045-27	s	IC UPD431000AGW-70L
IC38	8-759-045-27	s	IC UPD431000AGW-70L
IC39	8-759-045-27	s	IC UPD431000AGW-70L
IC40	8-759-045-27	s	IC UPD431000AGW-70L
IC41	8-759-045-27	s	IC UPD431000AGW-70L
IC42	8-759-045-27	s	IC UPD431000AGW-70L
IC43	8-759-045-27	s	IC UPD431000AGW-70L
IC44	8-759-045-27	s	IC UPD431000AGW-70L
IC45	8-759-045-27	s	IC UPD431000AGW-70L
IC46	8-759-045-27	s	IC UPD431000AGW-70L
IC47	8-759-045-27	s	IC UPD431000AGW-70L
IC52	8-759-243-78	s	IC TC74AC139F
IC53	8-759-243-06	s	IC TC74AC04F
IC54	8-759-998-41	s	IC MB89394-PF
IC55	8-759-973-34	s	IC RTC-62421B
IC56	8-759-243-74	s	IC TC74AC138F
IC57	8-759-065-85	s	IC MAX232N
IC58	8-759-973-43	s	IC MB8421-90LPFQ
IC59	8-759-555-91	s	IC HD647180FS-SIO-V1.1
IC60	8-759-973-43	s	IC MB8421-90LPFQ
IC61	8-759-555-91	s	IC HD647180FS-SIO-V1.1
IC62	8-759-973-43	s	IC MB8421-90LPFQ
IC63	8-759-555-91	s	IC HD647180FS-SIO-V1.1
IC64	8-759-926-12	s	IC SN74HC139NS
IC65	8-759-926-12	s	IC SN74HC139NS
IC66	8-759-243-06	s	IC TC74AC04F
IC67	8-759-065-85	s	IC MAX232N
IC68	8-759-008-57	s	IC MC34051P
IC69	8-759-008-57	s	IC MC34051P
IC70	8-759-008-57	s	IC MC34051P
IC71	8-759-244-10	s	IC TC74AC174F
IC72	8-759-938-68	s	IC CXD1095Q
IC73	8-759-938-68	s	IC CXD1095Q
IC74	8-759-044-95	s	IC MC14495P
IC75	8-759-044-95	s	IC MC14495P
IC76	8-759-244-71	s	IC TC74AC540F
IC77	8-759-506-91	s	IC ICL7621BCSA
IC78	8-759-506-91	s	IC ICL7621BCSA
IC79	8-759-100-96	s	IC UPC4558G2
IC80	8-759-231-93	s	IC TC74HC4051AF
IC81	8-759-505-29	s	IC SM6103S
IC82	8-759-505-00	s	IC CXD8052Q
IC83	8-759-945-30	s	IC SN75ALS194N
IC84	8-759-945-30	s	IC SN75ALS194N
IC85	8-759-505-27	s	IC SN75ALS195J
IC86	8-759-505-27	s	IC SN75ALS195J
IC87	8-759-243-90	s	IC TC74AC157F
IC96	8-759-243-06	s	IC TC74AC04F
IC97	8-759-973-43	s	IC MB8421-90LPFQ
IC98	8-759-555-92	s	IC HD647180CP-SIO-V1.1
IC102	8-759-008-57	s	IC MC34051P
IC104	8-759-506-92	s	IC LT1009CZ

NOTE: Please see page 9-1 for the parts that are not listed in the parts list.

(CPU-147 BOARD)

Ref. No. or Q'ty	Part No.	SP	Description
IC105	8-759-243-06	s	IC TC74AC04F
IC106	8-759-243-06	s	IC TC74AC04F
IC107	8-759-243-74	s	IC TC74AC138F
IC201	8-759-098-88	s	IC MC68EC020RP25
IC202	8-759-243-09	s	IC TC74AC74F
IC203	8-759-159-86	o	IC GAL20V8-S-RADCOV1, PLD
IC204	8-759-159-89	o	IC GAL16V8-S-QADCOV1, PLD
IC205	8-759-159-90	o	IC GAL16V8-S-ACK-1V1, PLD
IC206	8-759-159-87	o	IC GAL20V8-S-ACK-2V1, PLD
IC207	8-759-159-91	o	IC GAL16V8-S-ACK-3V1, PLD
IC208	8-759-159-88	o	IC GAL20V8-S-FMWTV1, PLD
IC209	8-759-098-89	s	IC AM29F010-70PC
IC210	8-759-098-89	s	IC AM29F010-70PC
IC211	8-759-098-89	s	IC AM29F010-70PC
IC212	8-759-098-89	s	IC AM29F010-70PC
IC213	8-759-244-75	s	IC TC74AC541F
IC214	8-759-244-75	s	IC TC74AC541F
IC215	8-759-244-25	s	IC TC74AC245F
IC216	8-759-066-10	s	IC HN58C256P-20
L1	1-412-031-11	s	INDUCTOR, CHIP 47uH
L2	1-412-031-11	s	INDUCTOR, CHIP 47uH
ND1	8-719-901-68	s	LED GL-6R202, RED
Q1	8-729-205-02	s	TRANSISTOR 2SA1150-Y
R121	1-216-682-11	s	METAL, CHIP 20K 0.5% 1/10W
R123	1-216-662-11	s	METAL, CHIP 3K 0.5% 1/10W
R207	1-216-615-11	s	METAL, CHIP 33 0.5% 1/10W
RB1	1-231-387-00	s	COMPOSITION CIRCUIT BLOCK
RB2-12	1-231-410-00	s	RESISTOR BLOCK 10Kx8
RY1	1-515-797-11	s	RELAY
RY2	1-515-797-11	s	RELAY
RY3	1-515-797-11	s	RELAY
RY4	1-515-797-11	s	RELAY
RY5	1-515-797-11	s	RELAY
RY6	1-515-797-11	s	RELAY
RY7	1-515-797-11	s	RELAY
S1	1-553-812-00	s	SWITCH, PUSH
S2	1-553-812-00	s	SWITCH, PUSH
S3	1-570-623-11	s	SWITCH, DIP 8-CKT
S4	1-554-303-21	s	SWITCH, PUSH
S5	1-554-303-21	s	SWITCH, PUSH
TH1	1-809-179-11	s	THERMISTOR 1k 102AT-2
X1	1-577-170-11	s	OSCILLATOR, CRYSTAL 50.00MHz
X2	1-577-382-11	s	VCO, CRYSTAL 16.000MHz
X3	1-567-812-11	s	RESONATOR, CERAMIC 12.288MHz
X4	1-567-812-11	s	RESONATOR, CERAMIC 12.288MHz
X5	1-567-812-11	s	RESONATOR, CERAMIC 12.288MHz
X6	1-567-812-11	s	RESONATOR, CERAMIC 12.288MHz

NOTE: Please see page 9-1 for the parts that are not listed in the parts list.

DA-71 BOARD

Ref. No. or Q'ty	Part No.	SP	Description
2pcs	3-166-184-01	o	LEVER, PC BOARD
4pcs	7-622-207-05	s	N 2.6, TYPE 2
2pcs	7-626-320-11	s	PIN, SPRING 3X8
4pcs	7-628-254-40	s	SCREW +PS 2.6X12
C105	1-163-239-11	s	CERAMIC, CHIP 33PF 5% 50V
C106	1-163-239-11	s	CERAMIC, CHIP 33PF 5% 50V
C224	1-163-085-00	s	CERAMIC, CHIP 2PF 50V
C226	1-135-211-11	s	TANTALUM, CHIP 6.8uF 20% 6.3V
C227	1-135-211-11	s	TANTALUM, CHIP 6.8uF 20% 6.3V
C405	1-135-091-00	s	TANTALUM, CHIP 1uF 10% 16V
C406	1-164-232-11	s	CERAMIC 0.01uF 10% 100V
C414	1-163-085-00	s	CERAMIC, CHIP 2PF 50V
C416	1-135-211-11	s	TANTALUM, CHIP 6.8uF 20% 6.3V
C418	1-135-211-11	s	TANTALUM, CHIP 6.8uF 20% 6.3V
CN5	1-566-513-11	s	CONNECTOR, FPC 13P
CN6	1-563-323-11	s	CONNECTOR, D-SUB 9P, FEMALE
CN7	1-569-170-11	o	CONNECTOR, COAXIAL, MALE
CNX2	1-506-748-11	o	CONNECTOR, DIN 96P, MALE
CNY2	1-506-748-11	o	CONNECTOR, DIN 96P, MALE
CV200	1-141-423-61	s	CAP, TRIMMER 20PF
CV400	1-141-423-61	s	CAP, TRIMMER 20PF
D3	8-719-421-11	s	DIODE LN15BP
FL200	1-236-174-11	s	FILTER, LOW-PASS
FL400	1-236-174-11	s	FILTER, LOW-PASS
IC2	8-759-057-32	s	IC CAT35C104K
IC100	8-759-948-40	s	IC DS1000M-50
IC101	8-759-244-85	s	IC TC74AC574F
IC102	8-759-244-85	s	IC TC74AC574F
IC200	8-759-244-85	s	IC TC74AC574F
IC201	8-759-244-85	s	IC TC74AC574F
IC202	8-759-505-06	s	IC CXD8058Q
IC203	8-759-505-02	s	IC CXD8053Q
IC204	8-759-071-82	s	IC CXD8364Q
IC205	8-759-099-78	s	IC CXD8338AQ
IC206	8-759-926-24	s	IC SN74HC164NS
IC207	8-759-926-45	s	IC SN74HC241ANS
IC209	8-752-015-81	s	IC CX20158
IC211	8-752-020-11	s	IC CX20201A-1
IC212	8-759-098-17	s	IC LT1191CS8
IC213	8-759-518-79	s	IC MB88325PF
IC214	8-752-015-81	s	IC CX20158
IC215	8-752-015-81	s	IC CX20158
IC216	8-759-244-15	s	IC TC74AC240F
IC217	8-752-202-90	s	IC CX22029
IC218	8-759-012-02	s	IC MC10H124M
IC300	8-759-233-44	s	IC TC74HC595AF
IC301	8-759-076-03	s	IC MB88346BPF
IC302	8-759-908-92	s	IC TL084CNS
IC303	8-759-506-92	s	IC LT1009CZ
IC400	8-759-505-06	s	IC CXD8058Q
IC401	8-759-099-78	s	IC CXD8338AQ
IC402	8-759-421-09	s	IC MN6557AS
IC406	8-759-098-17	s	IC LT1191CS8
L100	1-408-785-21	s	INDUCTOR CHIP 47UH
L200	1-408-777-00	s	INDUCTOR, CHIP 10uH

(DA-71 BOARD)

Ref. No. or Q'ty	Part No.	SP	Description
L201	1-408-777-00	s	INDUCTOR, CHIP 10uH
L400	1-408-797-11	s	INDUCTOR CHIP 470UH
L401	1-408-777-00	s	INDUCTOR, CHIP 10uH
Q100	8-729-175-72	s	TRANSISTOR 2SC2757-T33
Q101	8-729-112-65	s	TRANSISTOR 2SA1462-Y33
Q400	8-729-175-72	s	TRANSISTOR 2SC2757-T33
R120	1-216-667-11	s	METAL, CHIP 4.7K 0.5% 1/10W
R123	1-216-634-11	s	METAL, CHIP 200 0.5% 1/10W
R249	1-216-666-11	s	METAL, CHIP 4.3K 0.5% 1/10W
R252	1-216-631-11	s	METAL, CHIP 150 0.5% 1/10W
R253	1-216-631-11	s	METAL, CHIP 150 0.5% 1/10W
R256	1-216-657-11	s	METAL, CHIP 1.8K 0.5% 1/10W
R260	1-216-668-11	s	METAL, CHIP 5.1K 0.5% 1/10W
R264	1-216-655-11	s	METAL, CHIP 1.5K 0.5% 1/10W
R270	1-216-647-11	s	METAL, CHIP 680 0.5% 1/10W
R271	1-216-647-11	s	METAL, CHIP 680 0.5% 1/10W
R302	1-216-668-11	s	METAL, CHIP 5.1K 0.5% 1/10W
R305	1-216-654-11	s	METAL, CHIP 1.3K 0.5% 1/10W
R306	1-216-643-11	s	METAL, CHIP 470 0.5% 1/10W
R311	1-216-668-11	s	METAL, CHIP 5.1K 0.5% 1/10W
R312	1-216-681-11	s	METAL, CHIP 18K 0.5% 1/10W
R400	1-216-647-11	s	METAL, CHIP 680 0.5% 1/10W
R401	1-216-631-11	s	METAL, CHIP 150 0.5% 1/10W
R402	1-216-666-11	s	METAL, CHIP 4.3K 0.5% 1/10W
R404	1-216-669-11	s	METAL, CHIP 5.6K 0.5% 1/10W
R405	1-216-631-11	s	METAL, CHIP 150 0.5% 1/10W
R408	1-216-640-11	s	METAL, CHIP 360 0.5% 1/10W
R409	1-216-668-11	s	METAL, CHIP 5.1K 0.5% 1/10W
R421	1-216-669-11	s	METAL, CHIP 5.6K 0.5% 1/10W
S1	1-571-146-11	s	SWITCH, ROTARY

DA-73 BOARD

Ref. No. or Q'ty	Part No.	SP	Description
1pc	9-911-849-XX	o	CUSHION
C10	1-135-211-11	s	TANTALUM, CHIP 6.8uF 20% 6.3V
C13	1-135-211-11	s	TANTALUM, CHIP 6.8uF 20% 6.3V
CNA1	1-750-074-11	o	PIN, SIL 10P
CNB1	1-750-074-11	o	PIN, SIL 10P
CNC1	1-750-074-11	o	PIN, SIL 10P
CND1	1-750-074-11	o	PIN, SIL 10P
CNE1	1-750-074-11	o	PIN, SIL 10P
FL1	1-236-174-11	s	FILTER, LOW-PASS
IC3	8-759-099-78	s	IC CXD8338AQ
IC4	8-752-202-90	s	IC CX22029
IC5	8-752-020-11	s	IC CX20201A-1
IC6	8-759-098-17	s	IC LT1191CS8
IC7	8-759-098-16	s	IC LT1227CS8
IC8	8-759-098-16	s	IC LT1227CS8
IC9	8-759-908-17	s	IC TL082CPS
IC10	8-759-057-32	s	IC CAT35C104K
L1	1-408-777-00	s	INDUCTOR, CHIP 10uH
L2	1-408-777-00	s	INDUCTOR, CHIP 10uH
R1	1-216-640-11	s	METAL, CHIP 360 0.5% 1/10W
R2	1-216-631-11	s	METAL, CHIP 150 0.5% 1/10W
R3	1-216-295-00	s	METAL, CHIP 0
R4	1-216-631-11	s	METAL, CHIP 150 0.5% 1/10W
R5	1-216-295-00	s	METAL, CHIP 0
R6	1-216-668-11	s	METAL, CHIP 5.1K 0.5% 1/10W
R8	1-216-681-11	s	METAL, CHIP 18K 0.5% 1/10W
R9	1-216-643-11	s	METAL, CHIP 470 0.5% 1/10W
R19	1-216-668-11	s	METAL, CHIP 5.1K 0.5% 1/10W
R22	1-216-668-11	s	METAL, CHIP 5.1K 0.5% 1/10W
R23	1-216-655-11	s	METAL, CHIP 1.5K 0.5% 1/10W

NOTE: Please see page 9-1 for the parts that are not listed in the parts list.

DSK-9 BOARD

Ref. No. or Q'ty	Part No.	SP	Description
1pc	A-8271-808-A	o	MOUNTED CIRCUIT BOARD, DSK-9
2pcs	3-166-184-01	o	LEVER, PC BOARD
2pcs	3-166-185-01	s	NUT, PLATE
2pcs	7-622-207-05	s	N 2.6, TYPE 2
2pcs	7-626-320-11	s	PIN, SPRING 3X8
6pcs	7-628-254-40	s	SCREW +PS 2.6X12
8pcs	7-682-948-01	s	SCREW +PSW 3X8
C1	1-163-251-11	s	CERAMIC, CHIP 100PF 5% 50V
C2	1-163-251-11	s	CERAMIC, CHIP 100PF 5% 50V
CNX1	1-565-207-21	s	CONNECTOR, DIN 128P, MALE
CNY1	1-565-207-21	s	CONNECTOR, DIN 128P, MALE
CNZ1	1-506-748-11	o	CONNECTOR, DIN 96P, MALE
COP1	1-564-948-21	o	PIN, SHORTING
COR1	1-562-579-21	s	PLUG, SHORTING
D1	8-719-800-76	s	DIODE 1SS226
F1	⚠1-576-031-11	s	FUSE 10A 125V
IC1	8-759-505-27	s	IC SN75ALS195J
IC2	8-759-945-30	s	IC SN75ALS194N
IC3	8-759-505-00	s	IC CXD8052Q
IC4	8-759-057-32	s	IC CAT35C104K
IC5	8-759-234-77	s	IC TC4S66F
IC7	8-759-244-75	s	IC TC74AC541F
IC8	8-759-244-71	s	IC TC74AC540F
IC9	8-759-244-75	s	IC TC74AC541F
IC20	8-759-926-82	s	IC SN74HC574ANS
IC21	8-759-243-09	s	IC TC74AC74F
IC22	8-759-320-87	s	IC HM63021P-28
IC30	8-759-244-71	s	IC TC74AC540F
IC31	8-759-244-15	s	IC TC74AC240F
IC32	8-759-244-71	s	IC TC74AC540F
IC33	8-759-244-71	s	IC TC74AC540F
IC34	8-759-244-71	s	IC TC74AC540F
IC35	8-759-244-75	s	IC TC74AC541F
IC36	8-759-926-23	s	IC SN74HC163NS
IC37	8-759-243-09	s	IC TC74AC74F
IC38	8-759-244-15	s	IC TC74AC240F
IC39	8-759-244-75	s	IC TC74AC541F
IC51	8-759-505-06	s	IC CXD8058Q
IC52	8-759-505-06	s	IC CXD8058Q
IC54	8-759-505-06	s	IC CXD8058Q
IC55	8-759-505-06	s	IC CXD8058Q
IC56	8-759-505-06	s	IC CXD8058Q
IC57	8-759-505-06	s	IC CXD8058Q
IC58	8-759-505-06	s	IC CXD8058Q
IC100	8-759-505-02	s	IC CXD8053Q
IC101	8-759-926-82	s	IC SN74HC574ANS
IC102	8-759-926-82	s	IC SN74HC574ANS
IC103	8-759-244-75	s	IC TC74AC541F
IC104	8-759-244-75	s	IC TC74AC541F
IC105	8-759-320-87	s	IC HM63021P-28
IC106	8-759-320-87	s	IC HM63021P-28
IC107	8-759-320-87	s	IC HM63021P-28
IC108	8-759-320-87	s	IC HM63021P-28

(DSK-9 BOARD)

Ref. No. or Q'ty	Part No.	SP	Description
IC109	8-759-926-82	s	IC SN74HC574ANS
IC110	8-759-926-82	s	IC SN74HC574ANS
IC111	8-759-505-05	s	IC CXD8055
IC112	8-759-504-99	s	IC CXD8065
IC119	8-759-504-98	s	IC CXD8056Q
IC120	8-759-504-98	s	IC CXD8056Q
IC121	8-759-320-87	s	IC HM63021P-28
IC122	8-759-320-87	s	IC HM63021P-28
IC123	8-759-320-87	s	IC HM63021P-28
IC124	8-759-320-87	s	IC HM63021P-28
IC125	8-759-504-98	s	IC CXD8056Q
IC126	8-759-320-87	s	IC HM63021P-28
IC127	8-759-320-87	s	IC HM63021P-28
IC128	8-759-320-87	s	IC HM63021P-28
IC129	8-759-320-87	s	IC HM63021P-28
IC130	8-759-504-98	s	IC CXD8056Q
IC131	8-759-320-87	s	IC HM63021P-28
IC132	8-759-320-87	s	IC HM63021P-28
IC133	8-759-320-87	s	IC HM63021P-28
IC135	8-759-504-91	s	IC CXD8062Q
IC136	8-759-504-91	s	IC CXD8062Q
IC139	8-759-504-91	s	IC CXD8062Q
IC140	8-759-504-91	s	IC CXD8062Q
IC142	8-759-505-05	s	IC CXD8055
IC143	8-759-243-50	s	IC TC74AC08F
IC144	8-759-243-50	s	IC TC74AC08F
IC145	8-759-243-50	s	IC TC74AC08F
IC147	8-759-505-05	s	IC CXD8055
IC148	8-759-926-82	s	IC SN74HC574ANS
IC149	8-759-926-82	s	IC SN74HC574ANS
IC150	8-759-926-82	s	IC SN74HC574ANS
IC151	8-759-320-87	s	IC HM63021P-28
IC152	8-759-320-87	s	IC HM63021P-28
IC153	8-759-320-87	s	IC HM63021P-28
IC155	8-759-320-87	s	IC HM63021P-28
IC156	8-759-320-87	s	IC HM63021P-28
IC157	8-759-320-87	s	IC HM63021P-28
IC158	8-759-320-87	s	IC HM63021P-28
IC164	8-759-244-75	s	IC TC74AC541F
IC165	8-759-244-75	s	IC TC74AC541F
IC303	8-759-504-97	s	IC CXD8190Q
IC304	8-759-504-97	s	IC CXD8190Q
IC305	8-759-244-85	s	IC TC74AC574F
IC306	8-759-244-85	s	IC TC74AC574F
IC307	8-759-244-85	s	IC TC74AC574F
IC308	8-759-244-85	s	IC TC74AC574F
IC309	8-759-244-85	s	IC TC74AC574F
IC310	8-759-926-82	s	IC SN74HC574ANS
IC311	8-759-926-82	s	IC SN74HC574ANS
IC312	8-759-926-82	s	IC SN74HC574ANS
IC315	8-759-320-87	s	IC HM63021P-28
IC317	8-759-320-87	s	IC HM63021P-28
IC319	8-759-320-87	s	IC HM63021P-28
IC321	8-759-320-87	s	IC HM63021P-28
IC323	8-759-504-97	s	IC CXD8190Q
IC325	8-759-986-36	s	IC 74ACT257SJ
IC327	8-759-986-36	s	IC 74ACT257SJ
IC329	8-759-986-36	s	IC 74ACT257SJ
IC331	8-759-986-36	s	IC 74ACT257SJ

NOTE: Please see page 9-1 for the parts that are not listed in the parts list.

(DSK-9 BOARD)

Ref. No. or Q'ty	Part No.	SP	Description
IC333	8-759-986-36	s	IC 74ACT257SJ
IC335	8-759-986-36	s	IC 74ACT257SJ
IC337	8-759-504-91	s	IC CXD8062Q
IC343	8-759-504-91	s	IC CXD8062Q
IC349	8-759-504-91	s	IC CXD8062Q
IC355	8-759-504-91	s	IC CXD8062Q
IC357	8-759-948-31	s	IC CXD1319AQ
IC359	8-759-504-91	s	IC CXD8062Q
IC365	8-759-926-82	s	IC SN74HC574ANS
IC366	8-759-926-82	s	IC SN74HC574ANS
IC368	8-759-504-91	s	IC CXD8062Q
IC371	8-759-504-97	s	IC CXD8190Q
IC373	8-759-244-85	s	IC TC74AC574F
IC374	8-759-244-85	s	IC TC74AC574F
IC375	8-759-926-82	s	IC SN74HC574ANS
IC376	8-759-926-82	s	IC SN74HC574ANS
IC377	8-759-244-85	s	IC TC74AC574F
R8	1-216-619-11	s	METAL, CHIP 47 0.5% 1/10W
R9	1-216-619-11	s	METAL, CHIP 47 0.5% 1/10W
R16	1-216-619-11	s	METAL, CHIP 47 0.5% 1/10W
TH1	1-809-179-11	s	THERMISTOR 1k 102AT-2

NOTE: Please see page 9-1 for the parts that are not listed in the parts list.

DSK-9(A) BOARD

Ref. No. or Q'ty	Part No.	SP	Description
1pc	A-8271-890-A	o	MOUNTED CIRCUIT BOARD, DSK-9 (A)
2pcs	3-166-184-01	o	LEVER, PC BOARD
2pcs	3-166-185-01	s	NUT, PLATE
6pcs	7-621-259-75	s	SCREW +P 2.6X12
2pcs	7-622-207-05	s	N 2.6, TYPE 2
2pcs	7-626-320-11	s	PIN, SPRING 3X8
8pcs	7-682-948-01	s	SCREW +PSW 3X8
C1	1-163-251-11	s	CERAMIC, CHIP 100PF 5% 50V
C2	1-163-251-11	s	CERAMIC, CHIP 100PF 5% 50V
CNX1	1-565-207-21	s	CONNECTOR, DIN 128P, MALE
CNY1	1-565-207-21	s	CONNECTOR, DIN 128P, MALE
CNZ1	1-506-748-11	o	CONNECTOR, DIN 96P, MALE
COP1	1-564-948-21	o	PIN, SHORTING
COR1	1-562-579-21	s	PLUG, SHORTING
D1	8-719-800-76	s	DIODE 1SS226
F1	⚠1-576-031-11	s	FUSE 10A 125V
IC1	8-759-505-27	s	IC SN75ALS195J
IC2	8-759-945-30	s	IC SN75ALS194N
IC3	8-759-505-00	s	IC CXD8052Q
IC4	8-759-057-32	s	IC CAT35C104K
IC5	8-759-234-77	s	IC TC4S66F
IC7	8-759-244-75	s	IC TC74AC541F
IC8	8-759-244-71	s	IC TC74AC540F
IC9	8-759-244-75	s	IC TC74AC541F
IC20	8-759-926-82	s	IC SN74HC574ANS
IC21	8-759-243-09	s	IC TC74AC74F
IC22	8-759-320-87	s	IC HM63021P-28
IC30	8-759-244-71	s	IC TC74AC540F
IC31	8-759-244-15	s	IC TC74AC240F
IC32	8-759-244-71	s	IC TC74AC540F
IC33	8-759-244-71	s	IC TC74AC540F
IC34	8-759-244-71	s	IC TC74AC540F
IC35	8-759-244-75	s	IC TC74AC541F
IC36	8-759-926-23	s	IC SN74HC163NS
IC37	8-759-243-09	s	IC TC74AC74F
IC38	8-759-244-15	s	IC TC74AC240F
IC39	8-759-244-75	s	IC TC74AC541F
IC51	8-759-505-06	s	IC CXD8058Q
IC52	8-759-505-06	s	IC CXD8058Q
IC53	8-759-505-06	s	IC CXD8058Q
IC54	8-759-505-06	s	IC CXD8058Q
IC55	8-759-505-06	s	IC CXD8058Q
IC56	8-759-505-06	s	IC CXD8058Q
IC57	8-759-505-06	s	IC CXD8058Q
IC58	8-759-505-06	s	IC CXD8058Q
IC100	8-759-505-02	s	IC CXD8053Q
IC101	8-759-926-82	s	IC SN74HC574ANS
IC102	8-759-926-82	s	IC SN74HC574ANS
IC103	8-759-244-75	s	IC TC74AC541F
IC104	8-759-244-75	s	IC TC74AC541F
IC105	8-759-320-87	s	IC HM63021P-28
IC106	8-759-320-87	s	IC HM63021P-28
IC107	8-759-320-87	s	IC HM63021P-28

(DSK-9(A) BOARD)

Ref. No. or Q'ty	Part No.	SP	Description
IC108	8-759-320-87	s	IC HM63021P-28
IC109	8-759-926-82	s	IC SN74HC574ANS
IC110	8-759-926-82	s	IC SN74HC574ANS
IC111	8-759-505-05	s	IC CXD8055
IC112	8-759-504-99	s	IC CXD8065
IC113	8-759-926-82	s	IC SN74HC574ANS
IC114	8-759-926-82	s	IC SN74HC574ANS
IC115	8-759-926-82	s	IC SN74HC574ANS
IC119	8-759-504-98	s	IC CXD8056Q
IC120	8-759-504-98	s	IC CXD8056Q
IC121	8-759-320-87	s	IC HM63021P-28
IC122	8-759-320-87	s	IC HM63021P-28
IC123	8-759-320-87	s	IC HM63021P-28
IC124	8-759-320-87	s	IC HM63021P-28
IC125	8-759-504-98	s	IC CXD8056Q
IC126	8-759-320-87	s	IC HM63021P-28
IC127	8-759-320-87	s	IC HM63021P-28
IC128	8-759-320-87	s	IC HM63021P-28
IC129	8-759-320-87	s	IC HM63021P-28
IC130	8-759-504-98	s	IC CXD8056Q
IC131	8-759-320-87	s	IC HM63021P-28
IC132	8-759-320-87	s	IC HM63021P-28
IC133	8-759-320-87	s	IC HM63021P-28
IC135	8-759-504-91	s	IC CXD8062Q
IC136	8-759-504-91	s	IC CXD8062Q
IC139	8-759-504-91	s	IC CXD8062Q
IC140	8-759-504-91	s	IC CXD8062Q
IC142	8-759-505-05	s	IC CXD8055
IC143	8-759-243-50	s	IC TC74AC08F
IC144	8-759-243-50	s	IC TC74AC08F
IC145	8-759-243-50	s	IC TC74AC08F
IC147	8-759-505-05	s	IC CXD8055
IC148	8-759-926-82	s	IC SN74HC574ANS
IC149	8-759-926-82	s	IC SN74HC574ANS
IC150	8-759-926-82	s	IC SN74HC574ANS
IC151	8-759-320-87	s	IC HM63021P-28
IC152	8-759-320-87	s	IC HM63021P-28
IC153	8-759-320-87	s	IC HM63021P-28
IC155	8-759-320-87	s	IC HM63021P-28
IC156	8-759-320-87	s	IC HM63021P-28
IC157	8-759-320-87	s	IC HM63021P-28
IC158	8-759-320-87	s	IC HM63021P-28
IC159	8-759-320-87	s	IC HM63021P-28
IC160	8-759-320-87	s	IC HM63021P-28
IC161	8-759-320-87	s	IC HM63021P-28
IC162	8-759-320-87	s	IC HM63021P-28
IC164	8-759-244-75	s	IC TC74AC541F
IC165	8-759-244-75	s	IC TC74AC541F
IC303	8-759-504-97	s	IC CXD8190Q
IC304	8-759-504-97	s	IC CXD8190Q
IC305	8-759-244-85	s	IC TC74AC574F
IC306	8-759-244-85	s	IC TC74AC574F
IC307	8-759-244-85	s	IC TC74AC574F
IC308	8-759-244-85	s	IC TC74AC574F
IC309	8-759-244-85	s	IC TC74AC574F
IC310	8-759-926-82	s	IC SN74HC574ANS
IC311	8-759-926-82	s	IC SN74HC574ANS
IC312	8-759-926-82	s	IC SN74HC574ANS
IC315	8-759-320-87	s	IC HM63021P-28

NOTE: Please see page 9-1 for the parts that are not listed in the parts list.

(DSK-9(A) BOARD)

Ref. No. or Q'ty	Part No.	SP	Description
IC316	8-759-320-87	s	IC HM63021P-28
IC317	8-759-320-87	s	IC HM63021P-28
IC318	8-759-320-87	s	IC HM63021P-28
IC319	8-759-320-87	s	IC HM63021P-28
IC320	8-759-320-87	s	IC HM63021P-28
IC321	8-759-320-87	s	IC HM63021P-28
IC322	8-759-320-87	s	IC HM63021P-28
IC323	8-759-504-97	s	IC CXD8190Q
IC325	8-759-986-36	s	IC 74ACT257SJ
IC326	8-759-986-36	s	IC 74ACT257SJ
IC327	8-759-986-36	s	IC 74ACT257SJ
IC328	8-759-986-36	s	IC 74ACT257SJ
IC329	8-759-986-36	s	IC 74ACT257SJ
IC330	8-759-986-36	s	IC 74ACT257SJ
IC331	8-759-986-36	s	IC 74ACT257SJ
IC332	8-759-986-36	s	IC 74ACT257SJ
IC333	8-759-986-36	s	IC 74ACT257SJ
IC334	8-759-986-36	s	IC 74ACT257SJ
IC335	8-759-986-36	s	IC 74ACT257SJ
IC336	8-759-986-36	s	IC 74ACT257SJ
IC337	8-759-504-91	s	IC CXD8062Q
IC338	8-759-504-91	s	IC CXD8062Q
IC343	8-759-504-91	s	IC CXD8062Q
IC344	8-759-504-91	s	IC CXD8062Q
IC349	8-759-504-91	s	IC CXD8062Q
IC350	8-759-504-91	s	IC CXD8062Q
IC355	8-759-504-91	s	IC CXD8062Q
IC356	8-759-504-91	s	IC CXD8062Q
IC357	8-759-948-31	s	IC CXD1319AQ
IC358	8-759-948-31	s	IC CXD1319AQ
IC359	8-759-504-91	s	IC CXD8062Q
IC360	8-759-504-91	s	IC CXD8062Q
IC363	8-759-948-31	s	IC CXD1319AQ
IC364	8-759-948-31	s	IC CXD1319AQ
IC365	8-759-926-82	s	IC SN74HC574ANS
IC366	8-759-926-82	s	IC SN74HC574ANS
IC367	8-759-504-91	s	IC CXD8062Q
IC368	8-759-504-91	s	IC CXD8062Q
IC371	8-759-504-97	s	IC CXD8190Q
IC373	8-759-244-85	s	IC TC74AC574F
IC374	8-759-244-85	s	IC TC74AC574F
IC375	8-759-926-82	s	IC SN74HC574ANS
IC376	8-759-926-82	s	IC SN74HC574ANS
IC377	8-759-244-85	s	IC TC74AC574F
R8	1-216-619-11	s	METAL, CHIP 47 0.5% 1/10W
R9	1-216-619-11	s	METAL, CHIP 47 0.5% 1/10W
R16	1-216-619-11	s	METAL, CHIP 47 0.5% 1/10W
TH1	1-809-179-11	s	THERMISTOR 1k 102AT-2

IF-403(A) BOARD

Ref. No. or Q'ty	Part No.	SP	Description
1pc	A-8271-796-A	o	MOUNTED CIRCUIT BOARD, IF-403 (A)
2pcs	7-621-772-58	s	SCREW +B 2X10
2pcs	7-622-205-05	s	NUT M2 TYPE2
C2	1-126-396-11	s	ELECT, CHIP 47uF 20% 16V
C3	1-163-251-11	s	CERAMIC, CHIP 100PF 5% 50V
C4	1-163-251-11	s	CERAMIC, CHIP 100PF 5% 50V
C200	1-126-396-11	s	ELECT, CHIP 47uF 20% 16V
C201	1-126-396-11	s	ELECT, CHIP 47uF 20% 16V
CN1	1-568-064-11	o	CONNECTOR, TX 50P, MALE
CN2	1-580-341-11	o	CONNECTOR, DIN 80P, FEMALE
CN3	1-580-192-11	o	HEADDER, TX-3 50P, MALE
CN4	1-506-483-21	o	CONNECTOR 4P, MALE
CN5	1-564-607-11	o	CONNECTOR, VH 6P, MALE
IC1	8-759-926-49	s	IC SN74HC245NS
IC2	8-759-926-77	s	IC SN74HC541NS
IC3	8-759-926-64	s	IC SN74HC367ANS
IC4	8-759-923-64	s	IC AM26LS32ACNS
IC6	8-759-156-83	o	IC GAL16V8-IF403M/E1V1, PLD
IC12	8-759-926-29	s	IC SN74HC175NS
IC13	8-759-925-80	s	IC SN74HC14NS
IC14	8-759-112-63	s	IC UPD4701AC
IC16	8-759-234-67	s	IC TMP82C79M-2
IC17	8-759-926-77	s	IC SN74HC541NS
IC18	8-759-926-11	s	IC SN74HC138NS
IC19	8-759-926-77	s	IC SN74HC541NS
IC20	8-759-926-76	s	IC SN74HC540NS
IC21	8-759-926-48	s	IC SN74HC244NS
IC22	8-759-926-48	s	IC SN74HC244NS
IC23	8-759-926-48	s	IC SN74HC244NS
IC25	8-759-098-11	s	IC TD62783F
IC26	8-759-098-12	s	IC TD62083F
IC27	8-759-098-12	s	IC TD62083F
IC28	8-759-926-64	s	IC SN74HC367ANS
IC29	8-759-234-67	s	IC TMP82C79M-2
IC30	8-759-926-77	s	IC SN74HC541NS
IC31	8-759-926-11	s	IC SN74HC138NS
IC32	8-759-926-76	s	IC SN74HC540NS
IC33	8-759-098-12	s	IC TD62083F
IC34	8-759-098-11	s	IC TD62783F
IC35	8-759-926-11	s	IC SN74HC138NS
IC36	8-759-098-12	s	IC TD62083F
IC37	8-759-926-76	s	IC SN74HC540NS
IC38	8-759-098-11	s	IC TD62783F
IC39	8-759-234-67	s	IC TMP82C79M-2
R48	1-215-861-00	s	METAL 47 5% 1W
R49	1-215-861-00	s	METAL 47 5% 1W
R50	1-215-861-00	s	METAL 47 5% 1W
R51	1-215-861-00	s	METAL 47 5% 1W
R52	1-215-861-00	s	METAL 47 5% 1W
R53	1-215-861-00	s	METAL 47 5% 1W
R54	1-215-861-00	s	METAL 47 5% 1W
R55	1-215-861-00	s	METAL 47 5% 1W
RB1-3	1-231-410-00	s	RESISTOR BLOCK 10Kx8
RB4	1-231-533-00	s	RESISTOR BLOCK 10Kx4
RB5-8	1-231-410-00	s	RESISTOR BLOCK 10Kx8
RB9	1-231-385-00	s	RESISTOR BLOCK 4.7Kx8

IF-403(B) BOARD

Ref. No. or Q'ty	Part No.	SP	Description
1pc	A-8271-715-A	o	MOUNTED CIRCUIT BOARD, IF-403 (B)
2pcs	7-621-772-58	s	SCREW +B 2X10
2pcs	7-622-205-05	s	NUT M2 TYPE2
C2	1-126-396-11	s	ELECT, CHIP 47uF 20% 16V
C3	1-163-251-11	s	CERAMIC, CHIP 100PF 5% 50V
C4	1-163-251-11	s	CERAMIC, CHIP 100PF 5% 50V
C200	1-126-396-11	s	ELECT, CHIP 47uF 20% 16V
C201	1-126-396-11	s	ELECT, CHIP 47uF 20% 16V
CN1	1-568-064-11	o	CONNECTOR, TX 50P, MALE
CN2	1-580-341-11	o	CONNECTOR, DIN 80P, FEMALE
CN3	1-580-192-11	o	HEADDER, TX-3 50P, MALE
CN4	1-506-483-21	o	CONNECTOR 4P, MALE
CN5	1-564-607-11	o	CONNECTOR, VH 6P, MALE
IC1	8-759-926-49	s	IC SN74HC245NS
IC2	8-759-926-77	s	IC SN74HC541NS
IC3	8-759-926-64	s	IC SN74HC367ANS
IC4	8-759-923-64	s	IC AM26LS32ACNS
IC6	8-759-156-83	o	IC GAL16V8-IF403M/E1V1, PLD
IC12	8-759-926-29	s	IC SN74HC175NS
IC13	8-759-925-80	s	IC SN74HC14NS
IC14	8-759-112-63	s	IC UPD4701AC
IC16	8-759-234-67	s	IC TMP82C79M-2
IC17	8-759-926-77	s	IC SN74HC541NS
IC18	8-759-926-11	s	IC SN74HC138NS
IC19	8-759-926-77	s	IC SN74HC541NS
IC20	8-759-926-76	s	IC SN74HC540NS
IC21	8-759-926-64	s	IC SN74HC367ANS
IC22	8-759-926-64	s	IC SN74HC367ANS
IC23	8-759-926-64	s	IC SN74HC367ANS
IC25	8-759-098-11	s	IC TD62783F
IC26	8-759-098-12	s	IC TD62083F
IC27	8-759-098-12	s	IC TD62083F
IC28	8-759-926-64	s	IC SN74HC367ANS
IC29	8-759-234-67	s	IC TMP82C79M-2
IC30	8-759-926-77	s	IC SN74HC541NS
IC31	8-759-926-11	s	IC SN74HC138NS
IC32	8-759-926-76	s	IC SN74HC540NS
IC33	8-759-098-12	s	IC TD62083F
IC34	8-759-098-11	s	IC TD62783F
IC35	8-759-926-11	s	IC SN74HC138NS
IC36	8-759-098-12	s	IC TD62083F
IC37	8-759-926-76	s	IC SN74HC540NS
IC38	8-759-098-11	s	IC TD62783F
IC39	8-759-234-67	s	IC TMP82C79M-2
R48	1-215-861-00	s	METAL 47 5% 1W
R49	1-215-861-00	s	METAL 47 5% 1W
R50	1-215-861-00	s	METAL 47 5% 1W
R51	1-215-861-00	s	METAL 47 5% 1W
R52	1-215-861-00	s	METAL 47 5% 1W
R53	1-215-861-00	s	METAL 47 5% 1W
R54	1-215-861-00	s	METAL 47 5% 1W
R55	1-215-861-00	s	METAL 47 5% 1W
RB1-3	1-231-410-00	s	RESISTOR BLOCK 10Kx8
RB4	1-231-533-00	s	RESISTOR BLOCK 10Kx4
RB5-8	1-231-410-00	s	RESISTOR BLOCK 10Kx8
RB9	1-231-385-00	s	RESISTOR BLOCK 4.7Kx8

NOTE: Please see page 9-1 for the parts that are not listed in the parts list.

IF-404 BOARD

Ref. No. or Q'ty	Part No.	SP	Description
1pc	A-8271-797-A	o	MOUNTED CIRCUIT BOARD, IF-404
6pcs	7-621-772-58	s	SCREW +B 2X10
6pcs	7-622-205-05	s	NUT M2 TYPE2
C3	1-163-251-11	s	CERAMIC, CHIP 100PF 5% 50V
C4	1-163-251-11	s	CERAMIC, CHIP 100PF 5% 50V
C200	1-126-396-11	s	ELECT, CHIP 47uF 20% 16V
C201	1-126-396-11	s	ELECT, CHIP 47uF 20% 16V
CN1	1-565-784-11	s	HEADDER, TX-3 60P, MALE
CN2	1-564-607-11	o	CONNECTOR, VH 6P, MALE
CN3	1-506-469-11	s	CONNECTOR 4P, MALE
CN6	1-565-784-11	s	HEADDER, TX-3 60P, MALE
CN7	1-580-192-11	o	HEADDER, TX-3 50P, MALE
CN8	1-580-341-11	o	CONNECTOR, DIN 80P, FEMALE
CN9	1-580-341-11	o	CONNECTOR, DIN 80P, FEMALE
D1	8-719-400-18	s	DIODE MA152WK
D2	8-719-104-34	s	DIODE 1S2835
IC1	8-759-926-49	s	IC SN74HC245NS
IC2	8-759-926-77	s	IC SN74HC541NS
IC3	8-759-926-64	s	IC SN74HC367ANS
IC4	8-759-923-64	s	IC AM26LS32ACNS
IC5	8-759-925-74	s	IC TC74HC04NS
IC6	8-759-156-85	o	IC GAL16V8-IF404V1, PLD
IC7	8-759-926-11	s	IC SN74HC138NS
IC8	8-759-926-11	s	IC SN74HC138NS
IC13	8-759-106-58	s	IC UPD7004C
IC14	8-759-925-80	s	IC SN74HC14NS
IC15	8-759-925-80	s	IC SN74HC14NS
IC16	8-759-112-63	s	IC UPD4701AC
IC17	8-759-112-63	s	IC UPD4701AC
IC18	8-759-112-63	s	IC UPD4701AC
IC19	8-759-926-28	s	IC SN74HC174NS
IC20	8-759-926-77	s	IC SN74HC541NS
IC21	8-759-926-77	s	IC SN74HC541NS
IC22	8-759-926-77	s	IC SN74HC541NS
IC24	8-759-926-11	s	IC SN74HC138NS
IC25	8-759-098-12	s	IC TD62083F
IC26	8-759-926-76	s	IC SN74HC540NS
IC27	8-759-925-74	s	IC TC74HC04NS
IC28	8-759-098-11	s	IC TD62783F
IC29	8-759-234-67	s	IC TMP82C79M-2
IC30	8-759-926-77	s	IC SN74HC541NS
IC31	8-759-926-64	s	IC SN74HC367ANS
IC32	8-759-926-11	s	IC SN74HC138NS
IC33	8-759-098-12	s	IC TD62083F
IC34	8-759-926-76	s	IC SN74HC540NS
IC35	8-759-098-11	s	IC TD62783F
IC36	8-759-234-67	s	IC TMP82C79M-2
IC37	8-759-926-77	s	IC SN74HC541NS
IC38	8-759-926-64	s	IC SN74HC367ANS
IC39	8-759-926-64	s	IC SN74HC367ANS
IC45	8-759-926-77	s	IC SN74HC541NS
IC46	8-759-926-64	s	IC SN74HC367ANS
IC47	8-759-926-11	s	IC SN74HC138NS
IC48	8-759-098-12	s	IC TD62083F
IC49	8-759-926-76	s	IC SN74HC540NS
IC50	8-759-098-11	s	IC TD62783F
IC51	8-759-234-67	s	IC TMP82C79M-2

NOTE: Please see page 9-1 for the parts that are not listed in the parts list.

(IF-404 BOARD)

Ref. No. or Q'ty	Part No.	SP	Description
IC52	8-759-926-11	s	IC SN74HC138NS
IC53	8-759-098-12	s	IC TD62083F
IC54	8-759-926-76	s	IC SN74HC540NS
IC55	8-759-098-11	s	IC TD62783F
IC56	8-759-234-67	s	IC TMP82C79M-2
IC57	8-759-925-80	s	IC SN74HC14NS
R79	1-215-864-00	s	METAL 150 5% 1W
R80	1-215-864-00	s	METAL 150 5% 1W
R81	1-215-864-00	s	METAL 150 5% 1W
R82	1-215-864-00	s	METAL 150 5% 1W
R83	1-215-864-00	s	METAL 150 5% 1W
R84	1-215-864-00	s	METAL 150 5% 1W
R85	1-215-864-00	s	METAL 150 5% 1W
R86	1-215-864-00	s	METAL 150 5% 1W
RB1-3	1-231-410-00	s	RESISTOR BLOCK 10Kx8
RB4	1-231-533-00	s	RESISTOR BLOCK 10Kx4
RB5-10	1-231-410-00	s	RESISTOR BLOCK 10Kx8

IF-418 BOARD

Ref. No. or Q'ty	Part No.	SP	Description
C11	1-107-210-00	s	MICA 22PF 5% 500V
C12	1-107-210-00	s	MICA 22PF 5% 500V
CN1	1-565-689-11	o	CONNECTOR, TX 60P, MALE
CNI1	1-540-069-11	s	SOCKET, IC 84P
COP1	1-563-859-11	s	PLUG, SHORTING
COP2	1-563-859-11	s	PLUG, SHORTING
COP3	1-563-859-11	s	PLUG, SHORTING
COP4	1-563-859-11	s	PLUG, SHORTING
COR1	1-566-391-11	o	CONNECTOR 12P, MALE
D1	8-719-940-99	s	LED SLR-34VC3, RED
D2	8-719-940-99	s	LED SLR-34VC3, RED
D3	8-719-940-99	s	LED SLR-34VC3, RED
IC1	8-759-554-72	s	IC HD647180CP-SI02V1.0
IC2	8-759-973-43	s	IC MB8421-90LPFQ
IC3	8-759-240-65	s	IC TC74HCT139AF
IC4	8-759-243-06	s	IC TC74AC04F
IC6	8-759-008-57	s	IC MC34051P
X1	1-567-812-11	s	RESONATOR, CERAMIC 12.288MHz

KPC-5 BOARD

Ref. No. or Q'ty	Part No.	SP	Description
1pc	A-8271-807-A	o	MOUNTED CIRCUIT BOARD, KPC-5
1pc	3-166-184-01	o	LEVER, PC BOARD
2pcs	3-166-185-01	s	NUT, PLATE
1pc	3-179-150-01	o	BRACKET, EXTENSION
2pcs	7-622-207-05	s	N 2.6, TYPE 2
1pc	7-626-320-11	s	PIN, SPRING 3X8
6pcs	7-628-254-40	s	SCREW +PS 2.6X12
3pcs	7-682-903-01	s	SCREW +PWH 3X5
8pcs	7-682-948-01	s	SCREW +PSW 3X8
8pcs	7-685-104-19	s	SCREW +P 2X6 TYPE2 SLIT
C1	1-163-251-11	s	CERAMIC, CHIP 100PF 5% 50V
C2	1-163-251-11	s	CERAMIC, CHIP 100PF 5% 50V
CN110	1-695-640-31	s	CONNECTOR, FPC 13P
CN111	1-695-640-31	s	CONNECTOR, FPC 13P
CN210	1-695-640-31	s	CONNECTOR, FPC 13P
CN211	1-695-640-31	s	CONNECTOR, FPC 13P
CN300	1-695-640-31	s	CONNECTOR, FPC 13P
CN301	1-695-640-31	s	CONNECTOR, FPC 13P
CN302	1-695-640-31	s	CONNECTOR, FPC 13P
CN310	1-695-640-31	s	CONNECTOR, FPC 13P
CN311	1-695-640-31	s	CONNECTOR, FPC 13P
CNA2	1-750-066-11	o	CONNECTOR, BB 50P, FEMALE
CNB2	1-750-066-11	o	CONNECTOR, BB 50P, FEMALE
CND2	1-750-066-11	o	CONNECTOR, BB 50P, FEMALE
CNX1	1-565-207-21	s	CONNECTOR, DIN 128P, MALE
CNY1	1-565-207-21	s	CONNECTOR, DIN 128P, MALE
CNZ1	1-506-748-11	o	CONNECTOR, DIN 96P, MALE
COP1	1-564-950-21	o	PIN, SIL 8P
COR1	1-562-579-21	s	PLUG, SHORTING
D1	8-719-800-76	s	DIODE 1SS226
F1	⚠1-576-031-11	s	FUSE 10A 125V
IC1	8-759-505-27	s	IC SN75ALS195J
IC2	8-759-945-30	s	IC SN75ALS194N
IC3	8-759-505-00	s	IC CXD8052Q
IC4	8-759-057-32	s	IC CAT35C104K
IC5	8-759-234-77	s	IC TC4S66F
IC6	8-759-926-11	s	IC SN74HC138NS
IC7	8-759-244-75	s	IC TC74AC541F
IC8	8-759-244-71	s	IC TC74AC540F
IC9	8-759-947-47	s	IC SN74LS594N
IC10	8-759-926-42	s	IC SN74HC238NS
IC20	8-759-926-82	s	IC SN74HC574ANS
IC21	8-759-243-09	s	IC TC74AC74F
IC22	8-759-320-87	s	IC HM63021P-28
IC30	8-759-244-71	s	IC TC74AC540F
IC31	8-759-244-15	s	IC TC74AC240F
IC32	8-759-244-71	s	IC TC74AC540F
IC33	8-759-244-71	s	IC TC74AC540F
IC34	8-759-244-75	s	IC TC74AC541F
IC35	8-759-244-15	s	IC TC74AC240F
IC36	8-759-244-04	s	IC TC74AC163F

(KPC-5 BOARD)

Ref. No. or Q'ty	Part No.	SP	Description
IC37	8-759-243-09	s	IC TC74AC74F
IC41	8-759-244-71	s	IC TC74AC540F
IC43	8-759-244-71	s	IC TC74AC540F
IC51	8-759-505-06	s	IC CXD8058Q
IC52	8-759-505-06	s	IC CXD8058Q
IC53	8-759-505-06	s	IC CXD8058Q
IC54	8-759-505-06	s	IC CXD8058Q
IC55	8-759-505-06	s	IC CXD8058Q
IC100	8-759-505-02	s	IC CXD8053Q
IC101	8-759-244-75	s	IC TC74AC541F
IC102	8-759-244-75	s	IC TC74AC541F
IC103	8-759-244-75	s	IC TC74AC541F
IC104	8-759-244-75	s	IC TC74AC541F
IC105	8-759-320-87	s	IC HM63021P-28
IC106	8-759-320-87	s	IC HM63021P-28
IC107	8-759-320-87	s	IC HM63021P-28
IC108	8-759-320-87	s	IC HM63021P-28
IC109	8-759-244-06	s	IC TC74AC164F
IC110	8-759-244-06	s	IC TC74AC164F
IC111	8-759-505-05	s	IC CXD8055
IC112	8-759-504-99	s	IC CXD8065
IC113	8-759-704-29	s	IC WS57C291B-K2U11-V1.0, EPROM
IC114	8-759-704-30	s	IC WS57C291B-K2L11-V1.0, EPROM
IC115	8-759-704-22	s	IC WS57C49B-K2U13-V1.0, EPROM
IC116	8-759-704-23	s	IC WS57C49B-K2L13-V1.0, EPROM
IC131	8-759-320-87	s	IC HM63021P-28
IC132	8-759-320-87	s	IC HM63021P-28
IC133	8-759-320-87	s	IC HM63021P-28
IC134	8-759-986-36	s	IC 74ACT257SJ
IC135	8-759-504-91	s	IC CXD8062Q
IC136	8-759-244-85	s	IC TC74AC574F
IC137	8-759-244-85	s	IC TC74AC574F
IC138	8-759-244-85	s	IC TC74AC574F
IC139	8-759-244-85	s	IC TC74AC574F
IC145	8-759-244-37	s	IC TC74AC257F
IC146	8-759-243-50	s	IC TC74AC08F
IC147	8-759-243-50	s	IC TC74AC08F
IC148	8-759-243-50	s	IC TC74AC08F
IC201	8-759-244-75	s	IC TC74AC541F
IC202	8-759-244-75	s	IC TC74AC541F
IC203	8-759-244-75	s	IC TC74AC541F
IC204	8-759-244-75	s	IC TC74AC541F
IC205	8-759-320-87	s	IC HM63021P-28
IC206	8-759-320-87	s	IC HM63021P-28
IC207	8-759-320-87	s	IC HM63021P-28
IC208	8-759-320-87	s	IC HM63021P-28
IC209	8-759-244-06	s	IC TC74AC164F
IC210	8-759-244-06	s	IC TC74AC164F
IC211	8-759-505-05	s	IC CXD8055
IC212	8-759-504-99	s	IC CXD8065
IC213	8-759-704-29	s	IC WS57C291B-K2U11-V1.0, EPROM
IC214	8-759-704-30	s	IC WS57C291B-K2L11-V1.0, EPROM
IC215	8-759-704-22	s	IC WS57C49B-K2U13-V1.0, EPROM
IC216	8-759-704-23	s	IC WS57C49B-K2L13-V1.0, EPROM
IC231	8-759-320-87	s	IC HM63021P-28
IC232	8-759-320-87	s	IC HM63021P-28
IC233	8-759-320-87	s	IC HM63021P-28
IC234	8-759-986-36	s	IC 74ACT257SJ
IC235	8-759-504-91	s	IC CXD8062Q

NOTE: Please see page 9-1 for the parts that are not listed in the parts list.

(KPC-5 BOARD)

Ref. No. or Q'ty	Part No.	SP	Description
IC236	8-759-244-85	s	IC TC74AC574F
IC237	8-759-244-85	s	IC TC74AC574F
IC238	8-759-244-85	s	IC TC74AC574F
IC239	8-759-244-85	s	IC TC74AC574F
IC245	8-759-244-37	s	IC TC74AC257F
IC246	8-759-243-50	s	IC TC74AC08F
IC247	8-759-243-50	s	IC TC74AC08F
IC248	8-759-243-50	s	IC TC74AC08F
IC300	8-759-518-05	s	IC CXD8300Q
IC301	8-759-518-05	s	IC CXD8300Q
IC302	8-759-518-05	s	IC CXD8300Q
IC303	8-759-518-05	s	IC CXD8300Q
IC304	8-759-518-05	s	IC CXD8300Q
IC305	8-759-320-87	s	IC HM63021P-28
IC306	8-759-320-87	s	IC HM63021P-28
IC307	8-759-504-99	s	IC CXD8065
IC308	8-759-704-29	s	IC WS57C291B-K2U11-V1.0, EPROM
IC309	8-759-704-30	s	IC WS57C291B-K2L11-V1.0, EPROM
IC310	8-759-704-29	s	IC WS57C291B-K2U11-V1.0, EPROM
IC311	8-759-704-30	s	IC WS57C291B-K2L11-V1.0, EPROM
IC312	8-759-244-85	s	IC TC74AC574F
IC313	8-759-244-85	s	IC TC74AC574F
IC314	8-759-244-85	s	IC TC74AC574F
R8	1-216-619-11	s	METAL, CHIP 47 0.5% 1/10W
R9	1-216-619-11	s	METAL, CHIP 47 0.5% 1/10W
R16	1-216-619-11	s	METAL, CHIP 47 0.5% 1/10W
TH1	1-809-179-11	s	THERMISTOR 1k 102AT-2

KY-238 BOARD

Ref. No. or Q'ty	Part No.	SP	Description
1pc	A-8271-714-A	o	MOUNTED CIRCUIT BOARD, KY-238
1pc	3-708-605-01	o	KEY TOP
1pc	3-678-086-01	o	TIP(4),SW
CN1	1-568-064-11	o	CONNECTOR, TX 50P, MALE
D1	8-719-400-18	s	DIODE MA152WK
D3	8-719-400-18	s	DIODE MA152WK
D5	8-719-400-18	s	DIODE MA152WK
D7	8-719-400-18	s	DIODE MA152WK
D11	8-719-400-18	s	DIODE MA152WK
D13	8-719-400-18	s	DIODE MA152WK
D15	8-719-400-18	s	DIODE MA152WK
D17	8-719-400-18	s	DIODE MA152WK
D31	8-719-400-18	s	DIODE MA152WK
D33	8-719-400-18	s	DIODE MA152WK
D35	8-719-400-18	s	DIODE MA152WK
D37	8-719-400-18	s	DIODE MA152WK
D41	8-719-400-18	s	DIODE MA152WK
D43	8-719-400-18	s	DIODE MA152WK
D45	8-719-400-18	s	DIODE MA152WK
D47	8-719-400-18	s	DIODE MA152WK
D61	8-719-400-18	s	DIODE MA152WK
D63	8-719-400-18	s	DIODE MA152WK
D65	8-719-400-18	s	DIODE MA152WK
D67	8-719-400-18	s	DIODE MA152WK
D71	8-719-400-18	s	DIODE MA152WK
D73	8-719-400-18	s	DIODE MA152WK
D75	8-719-400-18	s	DIODE MA152WK
D77	8-719-400-18	s	DIODE MA152WK
S1-8	1-692-416-11	s	SWITCH, PUSH
S11-17	1-692-416-11	s	SWITCH, PUSH
S31-38	1-692-416-11	s	SWITCH, PUSH
S41-47	1-692-416-11	s	SWITCH, PUSH
S61-68	1-692-416-11	s	SWITCH, PUSH
S71-77	1-692-416-11	s	SWITCH, PUSH

NOTE: Please see page 9-1 for the parts that are not listed in the parts list.

KY-239(A) BOARD

Ref. No. or Q'ty	Part No.	SP	Description
1pc	A-8271-791-A	o	MOUNTED CIRCUIT BOARD, KY-239 (A)
4pcs	---PENDING---	o	LED, HOLDER
6pcs	1-568-616-11	o	SOCKET, SIL 6P
2pcs	1-569-090-11	o	SOCKET, SIL 12P
1pc	3-678-050-01	o	SPACER(1)
1pc	3-678-086-01	o	TIP(4),SW
1pc	3-708-593-11	o	KEY TOP
1pc	3-708-593-21	o	KEY TOP
1pc	3-708-593-31	o	KEY TOP
1pc	3-708-595-51	o	KEY TOP
1pc	3-708-595-61	o	KEY TOP
1pc	3-708-599-31	o	KEY TOP
1pc	3-708-599-41	o	KEY TOP
1pc	3-708-600-61	o	KEY TOP
1pc	3-708-600-71	o	KEY TOP
1pc	3-708-600-81	o	KEY TOP
1pc	3-708-600-91	o	KEY TOP
1pc	3-708-601-01	o	KEY TOP
1pc	3-708-601-11	o	KEY TOP
1pc	3-708-601-51	o	KEY TOP
1pc	3-708-605-01	o	KEY TOP
1pc	3-708-608-11	o	KEY TOP
1pc	3-708-608-21	o	KEY TOP
CN1	1-580-340-11	o	CONNECTOR 80P, MALE
CN2	1-566-478-11	o	PIN, SIL 6P
CN7	1-568-616-11	o	SOCKET, SIL 6P
CN8	1-568-616-11	o	SOCKET, SIL 6P
CN9	1-569-090-11	o	SOCKET, SIL 12P
D21	8-719-400-18	s	DIODE MA152WK
D23	8-719-400-18	s	DIODE MA152WK
D25	8-719-400-18	s	DIODE MA152WK
D51	8-719-400-18	s	DIODE MA152WK
D53	8-719-400-18	s	DIODE MA152WK
D55	8-719-400-18	s	DIODE MA152WK
D81	8-719-400-18	s	DIODE MA152WK
D83	8-719-400-18	s	DIODE MA152WK
D85	8-719-400-18	s	DIODE MA152WK
D91	8-719-400-18	s	DIODE MA152WK
D93	8-719-400-18	s	DIODE MA152WK
D95	8-719-400-18	s	DIODE MA152WK
D101	8-719-400-18	s	DIODE MA152WK
D103	8-719-400-18	s	DIODE MA152WK
D105	8-719-400-18	s	DIODE MA152WK
D111	8-719-400-18	s	DIODE MA152WK
D113	8-719-400-18	s	DIODE MA152WK
D115	8-719-400-18	s	DIODE MA152WK
D201	8-719-938-67	s	LED GL3EG8, GRN
D202	8-719-938-67	s	LED GL3EG8, GRN
D203	8-719-938-67	s	LED GL3EG8, GRN
D204	8-719-938-67	s	LED GL3EG8, GRN
D205	8-719-938-67	s	LED GL3EG8, GRN
D206	8-719-938-67	s	LED GL3EG8, GRN
D207	8-719-938-67	s	LED GL3EG8, GRN
D208	8-719-938-67	s	LED GL3EG8, GRN
D209	8-719-938-67	s	LED GL3EG8, GRN
D210	8-719-938-67	s	LED GL3EG8, GRN
D211	8-719-938-67	s	LED GL3EG8, GRN
D212	8-719-938-67	s	LED GL3EG8, GRN

(KY-239(A) BOARD)

Ref. No. or Q'ty	Part No.	SP	Description
R1	1-215-863-11	s	METAL 100 5% 1W
R2	1-215-863-11	s	METAL 100 5% 1W
R3	1-215-863-11	s	METAL 100 5% 1W
R4	1-215-863-11	s	METAL 100 5% 1W
R5	1-215-863-11	s	METAL 100 5% 1W
R6	1-215-863-11	s	METAL 100 5% 1W
R7	1-215-863-11	s	METAL 100 5% 1W
R8	1-215-863-11	s	METAL 100 5% 1W
S21-23	1-692-416-11	s	SWITCH, PUSH
S25	1-692-416-11	s	SWITCH, PUSH
S51-53	1-692-416-11	s	SWITCH, PUSH
S55	1-692-416-11	s	SWITCH, PUSH
S81-83	1-692-416-11	s	SWITCH, PUSH
S85	1-692-416-11	s	SWITCH, PUSH
S91	1-692-427-61	s	SWITCH, PUSH
S92	1-692-427-71	s	SWITCH, PUSH
S93	1-692-427-81	s	SWITCH, PUSH
S94	1-692-427-91	s	SWITCH, PUSH
S95	1-692-426-31	s	SWITCH, PUSH
S96	1-692-426-31	s	SWITCH, PUSH
S101	1-692-426-31	s	SWITCH, PUSH
S102	1-692-426-21	s	SWITCH, PUSH
S103	1-692-428-61	s	SWITCH, PUSH
S104	1-692-428-11	s	SWITCH, PUSH
S105	1-692-428-21	s	SWITCH, PUSH
S106	1-692-419-31	s	SWITCH, PUSH
S111	1-692-421-91	s	SWITCH, PUSH
S112	1-692-422-11	s	SWITCH, PUSH
S113	1-692-419-41	s	SWITCH, PUSH
S114	1-692-419-51	s	SWITCH, PUSH
S115	1-692-414-21	s	SWITCH, PUSH
S116	1-692-414-31	s	SWITCH, PUSH

NOTE: Please see page 9-1 for the parts that are not listed in the parts list.

KY-239(B) BOARD

Ref. No. or Q'ty	Part No.	SP	Description
1pc	A-8271-716-A	o	MOUNTED CIRCUIT BOARD, KY-239 (B)
4pcs	--PENDING---	o	LED, HOLDER
2pcs	1-569-090-11	o	SOCKET, SIL 12P
6pcs	1-568-616-11	o	SOCKET, SIL 6P
1pc	3-678-086-01	o	TIP(4),SW
1pc	3-708-593-11	o	KEY TOP
1pc	3-708-593-21	o	KEY TOP
1pc	3-708-593-31	o	KEY TOP
1pc	3-708-595-51	o	KEY TOP
1pc	3-708-595-61	o	KEY TOP
1pc	3-708-599-31	o	KEY TOP
1pc	3-708-599-41	o	KEY TOP
1pc	3-708-600-61	o	KEY TOP
1pc	3-708-600-71	o	KEY TOP
1pc	3-708-600-81	o	KEY TOP
1pc	3-708-600-91	o	KEY TOP
1pc	3-708-601-01	o	KEY TOP
1pc	3-708-601-11	o	KEY TOP
1pc	3-708-601-51	o	KEY TOP
1pc	3-708-605-01	o	KEY TOP
1pc	3-708-608-11	o	KEY TOP
1pc	3-708-608-21	o	KEY TOP
1pc	3-678-050-01	o	SPACER(1)
CN1	1-580-340-11	o	CONNECTOR 80P, MALE
CN2	1-566-478-11	o	PIN, SIL 6P
CN7	1-568-616-11	o	SOCKET, SIL 6P
CN8	1-568-616-11	o	SOCKET, SIL 6P
CN9	1-569-090-11	o	SOCKET, SIL 12P
D21	8-719-400-18	s	DIODE MA152WK
D23	8-719-400-18	s	DIODE MA152WK
D25	8-719-400-18	s	DIODE MA152WK
D51	8-719-400-18	s	DIODE MA152WK
D53	8-719-400-18	s	DIODE MA152WK
D55	8-719-400-18	s	DIODE MA152WK
D81	8-719-400-18	s	DIODE MA152WK
D83	8-719-400-18	s	DIODE MA152WK
D85	8-719-400-18	s	DIODE MA152WK
D91	8-719-400-18	s	DIODE MA152WK
D93	8-719-400-18	s	DIODE MA152WK
D95	8-719-400-18	s	DIODE MA152WK
D101	8-719-400-18	s	DIODE MA152WK
D103	8-719-400-18	s	DIODE MA152WK
D105	8-719-400-18	s	DIODE MA152WK
D111	8-719-400-18	s	DIODE MA152WK
D113	8-719-400-18	s	DIODE MA152WK
D115	8-719-400-18	s	DIODE MA152WK
D201	8-719-938-67	s	LED GL3EG8, GRN
D202	8-719-938-67	s	LED GL3EG8, GRN
D203	8-719-938-67	s	LED GL3EG8, GRN
D204	8-719-938-67	s	LED GL3EG8, GRN
D205	8-719-938-67	s	LED GL3EG8, GRN
D206	8-719-938-67	s	LED GL3EG8, GRN
D207	8-719-938-67	s	LED GL3EG8, GRN
D208	8-719-938-67	s	LED GL3EG8, GRN
D209	8-719-938-67	s	LED GL3EG8, GRN
D210	8-719-938-67	s	LED GL3EG8, GRN
D211	8-719-938-67	s	LED GL3EG8, GRN
D212	8-719-938-67	s	LED GL3EG8, GRN

(KY-239(B) BOARD)

Ref. No. or Q'ty	Part No.	SP	Description
R1	1-215-863-11	s	METAL 100 5% 1W
R2	1-215-863-11	s	METAL 100 5% 1W
R3	1-215-863-11	s	METAL 100 5% 1W
R4	1-215-863-11	s	METAL 100 5% 1W
R5	1-215-863-11	s	METAL 100 5% 1W
R6	1-215-863-11	s	METAL 100 5% 1W
R7	1-215-863-11	s	METAL 100 5% 1W
R8	1-215-863-11	s	METAL 100 5% 1W
S21-24	1-692-416-11	s	SWITCH, PUSH
S51-54	1-692-416-11	s	SWITCH, PUSH
S81-84	1-692-416-11	s	SWITCH, PUSH
S91	1-692-427-61	s	SWITCH, PUSH
S92	1-692-427-71	s	SWITCH, PUSH
S93	1-692-427-81	s	SWITCH, PUSH
S94	1-692-427-91	s	SWITCH, PUSH
S95	1-692-426-31	s	SWITCH, PUSH
S96	1-692-426-31	s	SWITCH, PUSH
S101	1-692-426-31	s	SWITCH, PUSH
S102-103	1-692-426-21	s	SWITCH, PUSH
S104	1-692-428-11	s	SWITCH, PUSH
S105	1-692-428-21	s	SWITCH, PUSH
S106	1-692-419-31	s	SWITCH, PUSH
S111	1-692-421-91	s	SWITCH, PUSH
S112	1-692-422-11	s	SWITCH, PUSH
S113	1-692-419-41	s	SWITCH, PUSH
S114	1-692-419-51	s	SWITCH, PUSH
S115	1-692-414-21	s	SWITCH, PUSH
S116	1-692-414-31	s	SWITCH, PUSH

NOTE: Please see page 9-1 for the parts that are not listed in the parts list.

KY-240 BOARD

Ref. No. or Q'ty	Part No.	SP	Description
1pc	A-8271-792-A	o	MOUNTED CIRCUIT BOARD, KY-240
1pc	3-708-592-11	o	KEY TOP
1pc	3-708-592-21	o	KEY TOP
1pc	3-708-592-31	o	KEY TOP
1pc	3-708-592-41	o	KEY TOP
1pc	3-708-592-51	o	KEY TOP
1pc	3-708-592-61	o	KEY TOP
1pc	3-708-592-71	o	KEY TOP
1pc	3-708-592-81	o	KEY TOP
1pc	3-708-592-91	o	KEY TOP
1pc	3-708-593-91	o	KEY TOP
1pc	3-708-597-52	o	KEY TOP
1pc	3-708-599-21	o	KEY TOP
1pc	3-708-599-41	o	KEY TOP
1pc	3-708-599-61	o	KEY TOP
1pc	3-708-599-71	o	KEY TOP
1pc	3-708-599-81	o	KEY TOP
1pc	3-708-599-91	o	KEY TOP
1pc	3-708-600-01	o	KEY TOP
1pc	3-708-600-11	o	KEY TOP
1pc	3-708-600-21	o	KEY TOP
1pc	3-708-600-31	o	KEY TOP
1pc	3-708-600-41	o	KEY TOP
1pc	3-708-600-51	o	KEY TOP
1pc	3-708-605-01	o	KEY TOP
1pc	3-678-083-01	o	TIP(3),SW
C100	1-126-396-11	s	ELECT, CHIP 47uF 20% 16V
C101	1-126-396-11	s	ELECT, CHIP 47uF 20% 16V
CN3	1-564-243-00	o	CONNECTOR, VH 6P, MALE
CN4	1-568-064-11	o	CONNECTOR, TX 50P, MALE
CN5	1-506-473-11	o	CONNECTOR 8P, MALE
CN6	1-506-471-11	o	CONNECTOR 6P, MALE
D1	8-719-400-18	s	DIODE MA152WK
D3	8-719-400-18	s	DIODE MA152WK
D5	8-719-400-18	s	DIODE MA152WK
D7	8-719-400-18	s	DIODE MA152WK
D11	8-719-400-18	s	DIODE MA152WK
D13	8-719-400-18	s	DIODE MA152WK
D15	8-719-400-18	s	DIODE MA152WK
D17	8-719-400-18	s	DIODE MA152WK
D21	8-719-400-18	s	DIODE MA152WK
D23	8-719-400-18	s	DIODE MA152WK
D25	8-719-400-18	s	DIODE MA152WK
D27	8-719-400-18	s	DIODE MA152WK
D31	8-719-400-18	s	DIODE MA152WK
D33	8-719-400-18	s	DIODE MA152WK
D35	8-719-400-18	s	DIODE MA152WK
D41	8-719-400-18	s	DIODE MA152WK
D43	8-719-400-18	s	DIODE MA152WK
D45	8-719-400-18	s	DIODE MA152WK
D47	8-719-400-18	s	DIODE MA152WK
D51	8-719-400-18	s	DIODE MA152WK
D53	8-719-400-18	s	DIODE MA152WK
D101	8-719-400-18	s	DIODE MA152WK
D103	8-719-400-18	s	DIODE MA152WK
D105	8-719-400-18	s	DIODE MA152WK
D107	8-719-400-18	s	DIODE MA152WK

NOTE: Please see page 9-1 for the parts that are not listed in the parts list.

(KY-240 BOARD)

Ref. No. or Q'ty	Part No.	SP	Description
D111	8-719-400-18	s	DIODE MA152WK
D113	8-719-400-18	s	DIODE MA152WK
D115	8-719-400-18	s	DIODE MA152WK
D117	8-719-400-18	s	DIODE MA152WK
D121	8-719-400-18	s	DIODE MA152WK
D123	8-719-400-18	s	DIODE MA152WK
D125	8-719-400-18	s	DIODE MA152WK
D127	8-719-400-18	s	DIODE MA152WK
D131	8-719-400-18	s	DIODE MA152WK
D133	8-719-400-18	s	DIODE MA152WK
D135	8-719-400-18	s	DIODE MA152WK
D137	8-719-400-18	s	DIODE MA152WK
IC1	8-759-926-49	s	IC SN74HC245NS
IC2	8-759-926-77	s	IC SN74HC541NS
IC3	8-759-926-77	s	IC SN74HC541NS
IC4	8-759-923-64	s	IC AM26LS32ACNS
IC5	8-759-925-85	s	IC SN74HC32NS
IC6	8-759-926-11	s	IC SN74HC138NS
IC7	8-759-926-11	s	IC SN74HC138NS
IC8	8-759-926-29	s	IC SN74HC175NS
IC9	8-759-098-11	s	IC TD62783F
IC10	8-759-098-12	s	IC TD62083F
IC12	8-759-234-67	s	IC TMP82C79M-2
IC13	8-759-926-11	s	IC SN74HC138NS
IC14	8-759-926-76	s	IC SN74HC540NS
IC15	8-759-925-74	s	IC TC74HC04NS
IC16	8-759-926-45	s	IC SN74HC241ANS
IC17	8-759-098-12	s	IC TD62083F
IC18	8-759-234-67	s	IC TMP82C79M-2
IC19	8-759-926-11	s	IC SN74HC138NS
IC20	8-759-098-12	s	IC TD62083F
IC21	8-759-926-76	s	IC SN74HC540NS
IC22	8-759-098-11	s	IC TD62783F
RB1-3	1-231-410-00	s	RESISTOR BLOCK 10Kx8
RB4	1-231-533-00	s	RESISTOR BLOCK 10Kx4
RB5-7	1-231-410-00	s	RESISTOR BLOCK 10Kx8
S1-8	1-692-416-11	s	SWITCH, PUSH
S11-18	1-692-416-11	s	SWITCH, PUSH
S21-28	1-692-416-11	s	SWITCH, PUSH
S31-36	1-692-416-11	s	SWITCH, PUSH
S41	1-692-426-51	s	SWITCH, PUSH
S42	1-692-426-61	s	SWITCH, PUSH
S43	1-692-426-71	s	SWITCH, PUSH
S44	1-692-426-81	s	SWITCH, PUSH
S45	1-692-426-91	s	SWITCH, PUSH
S46	1-692-427-11	s	SWITCH, PUSH
S47	1-692-427-21	s	SWITCH, PUSH
S48	1-692-427-31	s	SWITCH, PUSH
S51	1-692-427-41	s	SWITCH, PUSH
S52	1-692-427-51	s	SWITCH, PUSH
S53	1-692-426-31	s	SWITCH, PUSH
S101	1-692-418-21	s	SWITCH, PUSH
S102	1-692-418-31	s	SWITCH, PUSH
S103	1-692-418-41	s	SWITCH, PUSH
S104	1-692-418-51	s	SWITCH, PUSH
S105	1-692-418-61	s	SWITCH, PUSH
S106	1-692-418-71	s	SWITCH, PUSH

(KY-240 BOARD)

Ref. No. or Q'ty	Part No.	SP	Description
S107	1-692-418-81	s	SWITCH, PUSH
S108	1-692-418-91	s	SWITCH, PUSH
S111	1-692-419-11	s	SWITCH, PUSH
S112	1-692-426-11	s	SWITCH, PUSH
S113	1-692-418-21	s	SWITCH, PUSH
S114	1-692-418-31	s	SWITCH, PUSH
S115	1-692-418-41	s	SWITCH, PUSH
S116	1-692-418-51	s	SWITCH, PUSH
S117	1-692-418-61	s	SWITCH, PUSH
S118	1-692-418-71	s	SWITCH, PUSH
S121	1-692-418-81	s	SWITCH, PUSH
S122	1-692-418-91	s	SWITCH, PUSH
S123	1-692-419-11	s	SWITCH, PUSH
S124	1-692-426-11	s	SWITCH, PUSH
S125	1-692-418-21	s	SWITCH, PUSH
S126	1-692-418-31	s	SWITCH, PUSH
S127	1-692-418-41	s	SWITCH, PUSH
S128	1-692-418-51	s	SWITCH, PUSH
S131	1-692-418-61	s	SWITCH, PUSH
S132	1-692-418-71	s	SWITCH, PUSH
S133	1-692-418-81	s	SWITCH, PUSH
S134	1-692-418-91	s	SWITCH, PUSH
S135	1-692-419-11	s	SWITCH, PUSH
S136	1-692-426-11	s	SWITCH, PUSH
S137	1-692-420-21	s	SWITCH, PUSH
S138	1-692-424-22	s	SWITCH, PUSH

KY-241 BOARD

Ref. No. or Q'ty	Part No.	SP	Description
1pc	A-8271-799-A	o	MOUNTED CIRCUIT BOARD, KY-241
1pc	3-708-590-11	o	KEY TOP
1pc	3-708-590-21	o	KEY TOP
1pc	3-708-590-31	o	KEY TOP
1pc	3-708-590-41	o	KEY TOP
1pc	3-708-590-51	o	KEY TOP
CN1	1-506-471-11	o	CONNECTOR 6P, MALE
D1	8-719-400-18	s	DIODE MA152WK
D3	8-719-400-18	s	DIODE MA152WK
D5	8-719-400-18	s	DIODE MA152WK
S1	1-692-417-21	s	SWITCH, PUSH
S2	1-692-417-31	s	SWITCH, PUSH
S3	1-692-417-41	s	SWITCH, PUSH
S4	1-692-417-51	s	SWITCH, PUSH
S5	1-692-417-61	s	SWITCH, PUSH

NOTE: Please see page 9-1 for the parts that are not listed in the parts list.

KY-242 BOARD

Ref. No. or Q'ty	Part No.	SP	Description
1pc	A-8271-800-A	o	MOUNTED CIRCUIT BOARD, KY-242
1pc	3-708-590-61	o	KEY TOP
1pc	3-708-590-71	o	KEY TOP
1pc	3-708-590-81	o	KEY TOP
1pc	3-708-590-91	o	KEY TOP
1pc	3-708-591-01	o	KEY TOP
1pc	3-708-591-11	o	KEY TOP
1pc	3-708-591-21	o	KEY TOP
1pc	3-708-591-31	o	KEY TOP
1pc	3-708-591-41	o	KEY TOP
1pc	3-708-591-51	o	KEY TOP
1pc	3-708-591-61	o	KEY TOP
1pc	3-708-591-71	o	KEY TOP
CN1	1-506-473-11	o	CONNECTOR 8P, MALE
D1	8-719-400-18	s	DIODE MA152WK
D3	8-719-400-18	s	DIODE MA152WK
D5	8-719-400-18	s	DIODE MA152WK
D11	8-719-400-18	s	DIODE MA152WK
D13	8-719-400-18	s	DIODE MA152WK
D15	8-719-400-18	s	DIODE MA152WK
S1	1-692-429-81	s	SWITCH, PUSH
S2	1-692-417-71	s	SWITCH, PUSH
S3	1-692-417-81	s	SWITCH, PUSH
S4	1-692-417-91	s	SWITCH, PUSH
S5	1-692-429-11	s	SWITCH, PUSH
S6	1-692-429-21	s	SWITCH, PUSH
S11	1-692-429-31	s	SWITCH, PUSH
S12	1-692-429-41	s	SWITCH, PUSH
S13	1-692-429-51	s	SWITCH, PUSH
S14	1-692-429-61	s	SWITCH, PUSH
S15	1-692-429-71	s	SWITCH, PUSH
S16	1-692-429-91	s	SWITCH, PUSH

KY-243 BOARD

Ref. No. or Q'ty	Part No.	SP	Description
1pc	A-8271-793-A	o	MOUNTED CIRCUIT BOARD, KY-243
1pc	3-708-593-11	o	KEY TOP
1pc	3-708-593-31	o	KEY TOP
1pc	3-708-593-41	o	KEY TOP
1pc	3-708-593-51	o	KEY TOP
1pc	3-708-593-61	o	KEY TOP
1pc	3-708-593-71	o	KEY TOP
1pc	3-708-593-81	o	KEY TOP
1pc	3-708-593-91	o	KEY TOP
1pc	3-708-594-01	o	KEY TOP
1pc	3-708-594-11	o	KEY TOP
1pc	3-708-594-21	o	KEY TOP
1pc	3-708-595-21	o	KEY TOP
1pc	3-708-595-31	o	KEY TOP
1pc	3-708-595-41	o	KEY TOP
1pc	3-708-595-51	o	KEY TOP
1pc	3-708-595-61	o	KEY TOP
1pc	3-708-595-71	o	KEY TOP
1pc	3-708-595-81	o	KEY TOP
1pc	3-708-597-11	o	KEY TOP
1pc	3-708-597-21	o	KEY TOP
1pc	3-708-597-31	o	KEY TOP
1pc	3-708-597-41	o	KEY TOP
1pc	3-708-597-61	o	KEY TOP
1pc	3-708-597-71	o	KEY TOP
1pc	3-708-597-81	o	KEY TOP
1pc	3-708-597-91	o	KEY TOP
2pcs	3-708-599-31	o	KEY TOP
1pc	3-708-599-51	o	KEY TOP
2pcs	3-708-601-21	o	KEY TOP
2pcs	3-708-601-31	o	KEY TOP
1pc	3-708-601-41	o	KEY TOP
1pc	3-708-602-11	o	KEY TOP
1pc	3-708-602-21	o	KEY TOP
1pc	3-708-602-31	o	KEY TOP
1pc	3-708-602-41	o	KEY TOP
1pc	3-708-602-52	o	KEY TOP
1pc	3-708-602-61	o	KEY TOP
1pc	3-708-602-71	o	KEY TOP
1pc	3-708-603-11	o	KEY TOP
1pc	3-708-603-21	o	KEY TOP
1pc	3-708-603-31	o	KEY TOP
1pc	3-708-603-41	o	KEY TOP
1pc	3-708-603-51	o	KEY TOP
1pc	3-708-603-61	o	KEY TOP
1pc	3-708-603-71	o	KEY TOP
1pc	3-708-603-81	o	KEY TOP
1pc	3-708-603-91	o	KEY TOP
1pc	3-708-604-01	o	KEY TOP
1pc	3-708-604-11	o	KEY TOP
1pc	3-708-605-01	o	KEY TOP
1pc	3-708-607-11	o	KEY TOP
1pc	3-708-608-11	o	KEY TOP
1pc	3-708-608-21	o	KEY TOP
4pcs	1-568-616-11	o	SOCKET, SIL 6P
4pcs	1-565-430-11	s	SOCKET, SIL 10P
CN1	1-580-340-11	o	CONNECTOR 80P, MALE
CN2	1-580-340-11	o	CONNECTOR 80P, MALE

NOTE: Please see page 9-1 for the parts that are not listed in the parts list.

(KY-243 BOARD)

Ref. No. or Q'ty	Part No.	SP	Description
CN3	1-568-616-11	o	SOCKET, SIL 6P
CN4	1-568-616-11	o	SOCKET, SIL 6P
CN5	1-565-430-11	s	SOCKET, SIL 10P
CN6	1-565-430-11	s	SOCKET, SIL 10P
D1	8-719-400-18	s	DIODE MA152WK
D3	8-719-400-18	s	DIODE MA152WK
D5	8-719-400-18	s	DIODE MA152WK
D7	8-719-400-18	s	DIODE MA152WK
D11	8-719-400-18	s	DIODE MA152WK
D13	8-719-400-18	s	DIODE MA152WK
D15	8-719-400-18	s	DIODE MA152WK
D17	8-719-400-18	s	DIODE MA152WK
D21	8-719-400-18	s	DIODE MA152WK
D23	8-719-400-18	s	DIODE MA152WK
D25	8-719-400-18	s	DIODE MA152WK
D27	8-719-400-18	s	DIODE MA152WK
D31	8-719-400-18	s	DIODE MA152WK
D33	8-719-400-18	s	DIODE MA152WK
D35	8-719-400-18	s	DIODE MA152WK
D41	8-719-400-18	s	DIODE MA152WK
D43	8-719-400-18	s	DIODE MA152WK
D45	8-719-400-18	s	DIODE MA152WK
D47	8-719-400-18	s	DIODE MA152WK
D51	8-719-400-18	s	DIODE MA152WK
D53	8-719-400-18	s	DIODE MA152WK
D101	8-719-400-18	s	DIODE MA152WK
D103	8-719-400-18	s	DIODE MA152WK
D105	8-719-400-18	s	DIODE MA152WK
D107	8-719-400-18	s	DIODE MA152WK
D201	8-719-400-18	s	DIODE MA152WK
D203	8-719-400-18	s	DIODE MA152WK
D205	8-719-400-18	s	DIODE MA152WK
D207	8-719-400-18	s	DIODE MA152WK
D211	8-719-400-18	s	DIODE MA152WK
D301	8-719-400-18	s	DIODE MA152WK
D303	8-719-400-18	s	DIODE MA152WK
D305	8-719-400-18	s	DIODE MA152WK
D307	8-719-400-18	s	DIODE MA152WK
D311	8-719-400-18	s	DIODE MA152WK
D313	8-719-400-18	s	DIODE MA152WK
D315	8-719-400-18	s	DIODE MA152WK
D317	8-719-400-18	s	DIODE MA152WK
D321	8-719-400-18	s	DIODE MA152WK
D323	8-719-400-18	s	DIODE MA152WK
D325	8-719-400-18	s	DIODE MA152WK
S1	1-692-421-91	s	SWITCH, PUSH
S2	1-692-422-11	s	SWITCH, PUSH
S3	1-692-419-51	s	SWITCH, PUSH
S4	1-692-419-61	s	SWITCH, PUSH
S5	1-692-418-11	s	SWITCH, PUSH
S6	1-692-418-11	s	SWITCH, PUSH
S7	1-692-421-91	s	SWITCH, PUSH
S8	1-692-422-11	s	SWITCH, PUSH
S11	1-692-419-51	s	SWITCH, PUSH
S12	1-692-419-61	s	SWITCH, PUSH
S13	1-692-418-11	s	SWITCH, PUSH
S14	1-692-418-11	s	SWITCH, PUSH
S15	1-692-419-71	s	SWITCH, PUSH

NOTE: Please see page 9-1 for the parts that are not listed in the parts list.

(KY-243 BOARD)

Ref. No. or Q'ty	Part No.	SP	Description
S16	1-692-424-31	s	SWITCH, PUSH
S17	1-692-424-41	s	SWITCH, PUSH
S18	1-692-422-21	s	SWITCH, PUSH
S21	1-692-424-51	s	SWITCH, PUSH
S22	1-692-424-61	s	SWITCH, PUSH
S23	1-692-422-31	s	SWITCH, PUSH
S24	1-692-419-81	s	SWITCH, PUSH
S25	1-692-419-91	s	SWITCH, PUSH
S26	1-692-420-11	s	SWITCH, PUSH
S27	1-692-420-21	s	SWITCH, PUSH
S28	1-692-420-31	s	SWITCH, PUSH
S31	1-692-418-11	s	SWITCH, PUSH
S32	1-692-418-11	s	SWITCH, PUSH
S33	1-692-418-11	s	SWITCH, PUSH
S34	1-692-418-11	s	SWITCH, PUSH
S35	1-692-420-41	s	SWITCH, PUSH
S36	1-692-420-51	s	SWITCH, PUSH
S41-48	1-692-416-11	s	SWITCH, PUSH
S51-52	1-692-416-11	s	SWITCH, PUSH
S53	1-692-414-21	s	SWITCH, PUSH
S54	1-692-414-31	s	SWITCH, PUSH
S101	1-692-428-31	s	SWITCH, PUSH
S102	1-692-428-41	s	SWITCH, PUSH
S103	1-692-426-21	s	SWITCH, PUSH
S104	1-692-419-31	s	SWITCH, PUSH
S105	1-692-419-71	s	SWITCH, PUSH
S106	1-692-426-41	s	SWITCH, PUSH
S107	1-692-428-51	s	SWITCH, PUSH
S201	1-692-421-61	s	SWITCH, PUSH
S202	1-692-423-71	s	SWITCH, PUSH
S203	1-692-421-71	s	SWITCH, PUSH
S204	1-692-422-41	s	SWITCH, PUSH
S205	1-692-423-81	s	SWITCH, PUSH
S206	1-692-422-51	s	SWITCH, PUSH
S207	1-692-423-91	s	SWITCH, PUSH
S208	1-692-419-71	s	SWITCH, PUSH
S211	1-692-424-11	s	SWITCH, PUSH
S212	1-692-421-81	s	SWITCH, PUSH
S301	1-692-411-21	s	SWITCH, PUSH
S302	1-692-411-41	s	SWITCH, PUSH
S303	1-692-411-31	s	SWITCH, PUSH
S304	1-692-411-51	s	SWITCH, PUSH
S305	1-692-411-61	s	SWITCH, PUSH
S306	1-692-411-71	s	SWITCH, PUSH
S307	1-692-411-81	s	SWITCH, PUSH
S311	1-692-412-21	s	SWITCH, PUSH
S312	1-692-412-31	s	SWITCH, PUSH
S313	1-692-412-41	s	SWITCH, PUSH
S314	1-692-412-51	s	SWITCH, PUSH
S315	1-692-412-61	s	SWITCH, PUSH
S316	1-692-412-71	s	SWITCH, PUSH
S317	1-692-412-81	s	SWITCH, PUSH
S321	1-692-412-91	s	SWITCH, PUSH
S322	1-692-413-11	s	SWITCH, PUSH
S323	1-692-413-21	s	SWITCH, PUSH
S324	1-692-413-31	s	SWITCH, PUSH
S325	1-692-415-21	s	SWITCH, PUSH

KY-244 BOARD

Ref. No. or Q'ty	Part No.	SP	Description
1pc	3-708-593-91	o	KEY TOP
1pc	3-708-594-51	o	KEY TOP
1pc	3-708-594-61	o	KEY TOP
1pc	3-708-594-71	o	KEY TOP
1pc	3-708-594-81	o	KEY TOP
1pc	3-708-594-91	o	KEY TOP
1pc	3-708-595-01	o	KEY TOP
1pc	3-708-595-11	o	KEY TOP
1pc	3-708-596-31	o	KEY TOP
1pc	3-708-596-41	o	KEY TOP
1pc	3-708-596-51	o	KEY TOP
1pc	3-708-596-61	o	KEY TOP
1pc	3-708-596-71	o	KEY TOP
1pc	3-708-596-81	o	KEY TOP
1pc	3-708-596-91	o	KEY TOP
1pc	3-708-597-02	o	KEY TOP
1pc	3-708-598-51	o	KEY TOP
1pc	3-708-598-81	o	KEY TOP
1pc	3-708-599-01	o	KEY TOP
1pc	3-708-599-31	o	KEY TOP
1pc	3-708-599-41	o	KEY TOP
2pcs	1-569-090-11	o	SOCKET, SIL 12P
2pcs	3-678-085-01	o	SPACER(2),PCB
CN1	1-565-689-11	o	CONNECTOR, TX 60P, MALE
CN2	1-569-090-11	o	SOCKET, SIL 12P
D1	8-719-400-18	s	DIODE MA152WK
D3	8-719-400-18	s	DIODE MA152WK
D5	8-719-400-18	s	DIODE MA152WK
D7	8-719-400-18	s	DIODE MA152WK
D11	8-719-400-18	s	DIODE MA152WK
D13	8-719-400-18	s	DIODE MA152WK
D15	8-719-400-18	s	DIODE MA152WK
D17	8-719-400-18	s	DIODE MA152WK
D21	8-719-400-18	s	DIODE MA152WK
D23	8-719-400-18	s	DIODE MA152WK
D25	8-719-400-18	s	DIODE MA152WK
D27	8-719-400-18	s	DIODE MA152WK
D38	8-719-400-18	s	DIODE MA152WK
S1	1-692-422-81	s	SWITCH, PUSH
S3	1-692-420-91	s	SWITCH, PUSH
S4	1-692-421-11	s	SWITCH, PUSH
S5	1-692-425-61	s	SWITCH, PUSH
S6	1-692-421-21	s	SWITCH, PUSH
S7	1-692-422-91	s	SWITCH, PUSH
S8	1-692-418-11	s	SWITCH, PUSH
S11	1-692-423-11	s	SWITCH, PUSH
S12	1-692-423-21	s	SWITCH, PUSH
S13	1-692-425-31	s	SWITCH, PUSH
S14	1-692-423-31	s	SWITCH, PUSH
S15	1-692-423-41	s	SWITCH, PUSH
S16	1-692-421-31	s	SWITCH, PUSH
S17	1-692-418-11	s	SWITCH, PUSH
S18	1-692-419-21	s	SWITCH, PUSH
S21	1-692-421-41	s	SWITCH, PUSH
S23	1-692-423-51	s	SWITCH, PUSH
S24	1-692-420-81	s	SWITCH, PUSH
S25	1-692-425-81	s	SWITCH, PUSH
S26	1-692-418-11	s	SWITCH, PUSH

(KY-244 BOARD)

Ref. No. or Q'ty	Part No.	SP	Description
S27	1-692-423-62	s	SWITCH, PUSH
S28	1-692-421-51	s	SWITCH, PUSH
S38	1-692-420-21	s	SWITCH, PUSH

NOTE: Please see page 9-1 for the parts that are not listed in the parts list.

KY-245 BOARD

Ref. No. or Q'ty	Part No.	SP	Description
1pc	A-8271-794-A	o	MOUNTED CIRCUIT BOARD, KY-245
1pc	3-708-594-31	o	KEY TOP
1pc	3-708-594-41	o	KEY TOP
1pc	3-708-594-51	o	KEY TOP
1pc	3-708-596-11	o	KEY TOP
1pc	3-708-596-21	o	KEY TOP
1pc	3-708-597-61	o	KEY TOP
1pc	3-708-597-71	o	KEY TOP
1pc	3-708-598-01	o	KEY TOP
1pc	3-708-598-11	o	KEY TOP
1pc	3-708-598-21	o	KEY TOP
1pc	3-708-598-31	o	KEY TOP
1pc	3-708-598-41	o	KEY TOP
1pc	3-708-598-51	o	KEY TOP
1pc	3-708-598-61	o	KEY TOP
1pc	3-708-598-71	o	KEY TOP
1pc	3-708-599-11	o	KEY TOP
1pc	3-708-601-21	o	KEY TOP
1pc	3-708-601-31	o	KEY TOP
1pc	3-708-604-21	o	KEY TOP
1pc	3-708-604-31	o	KEY TOP
1pc	3-708-604-41	o	KEY TOP
1pc	3-708-604-51	o	KEY TOP
C5	1-124-589-11	s	ELECT 47uF 20% 16V
C7	1-164-232-11	s	CERAMIC 0.01uF 10% 100V
C8	1-164-232-11	s	CERAMIC 0.01uF 10% 100V
CN1	1-565-689-11	o	CONNECTOR, TX 60P, MALE
CN2	1-506-469-11	s	CONNECTOR 4P, MALE
CN3	1-506-469-11	s	CONNECTOR 4P, MALE
CN4	1-506-469-11	s	CONNECTOR 4P, MALE
CN5	1-506-469-11	s	CONNECTOR 4P, MALE
CN6	1-506-469-11	s	CONNECTOR 4P, MALE
D3	8-719-400-18	s	DIODE MA152WK
D5	8-719-400-18	s	DIODE MA152WK
D7	8-719-400-18	s	DIODE MA152WK
D11	8-719-400-18	s	DIODE MA152WK
D13	8-719-400-18	s	DIODE MA152WK
D15	8-719-400-18	s	DIODE MA152WK
D17	8-719-400-18	s	DIODE MA152WK
D21	8-719-400-18	s	DIODE MA152WK
D23	8-719-400-18	s	DIODE MA152WK
D25	8-719-400-18	s	DIODE MA152WK
D27	8-719-400-18	s	DIODE MA152WK
D31	8-719-400-18	s	DIODE MA152WK
D33	8-719-400-18	s	DIODE MA152WK
S3	1-692-422-61	s	SWITCH, PUSH
S4	1-692-422-61	s	SWITCH, PUSH
S5	1-692-422-61	s	SWITCH, PUSH
S6	1-692-422-61	s	SWITCH, PUSH
S7	1-692-424-71	s	SWITCH, PUSH
S8	1-692-424-81	s	SWITCH, PUSH
S11	1-692-424-91	s	SWITCH, PUSH
S12	1-692-425-11	s	SWITCH, PUSH
S13	1-692-425-21	s	SWITCH, PUSH
S14	1-692-425-31	s	SWITCH, PUSH
S15	1-692-425-41	s	SWITCH, PUSH
S16	1-692-425-51	s	SWITCH, PUSH

NOTE: Please see page 9-1 for the parts that are not listed in the parts list.

(KY-245 BOARD)

Ref. No. or Q'ty	Part No.	SP	Description
S17	1-692-422-71	s	SWITCH, PUSH
S18	1-692-420-61	s	SWITCH, PUSH
S21	1-692-420-71	s	SWITCH, PUSH
S22	1-692-425-91	s	SWITCH, PUSH
S23	1-692-420-81	s	SWITCH, PUSH
S24	1-692-422-41	s	SWITCH, PUSH
S25	1-692-422-51	s	SWITCH, PUSH
S26	1-692-424-31	s	SWITCH, PUSH
S27	1-692-424-41	s	SWITCH, PUSH
S31	1-692-413-61	s	SWITCH, PUSH
S32	1-692-413-71	s	SWITCH, PUSH
S33	1-692-413-51	s	SWITCH, PUSH
S34	1-692-413-41	s	SWITCH, PUSH
S51	1-553-812-00	s	SWITCH, PUSH

KY-246 BOARD

Ref. No. or Q'ty	Part No.	SP	Description
1pc	A-8271-795-A	o	MOUNTED CIRCUIT BOARD, KY-246
4pcs	7-685-646-79	s	SCREW +BVTP 3X8 TYPE2 N-S
C1	1-164-232-11	s	CERAMIC 0.01uF 10% 100V
C2	1-164-232-11	s	CERAMIC 0.01uF 10% 100V
C3	1-162-638-11	s	CERAMIC, CHIP 1uF 16V
CN1	1-506-469-11	s	CONNECTOR 4P, MALE
RV1	1-238-724-11	s	RES, VAR (STICK) CARBON 10k x 2

LE-76 BOARD

Ref. No. or Q'ty	Part No.	SP	Description
1pc	1-631-489-11	o	PRINTED CIRCUIT BOARD, LE-76
CN1	1-506-468-11	o	CONNECTOR 3P, MALE
D1	8-719-920-05	s	DIODE SLP281C-50
D2	8-719-920-05	s	DIODE SLP281C-50
D3	8-719-920-05	s	DIODE SLP281C-50
D4	8-719-920-05	s	DIODE SLP281C-50
R1	⚠1-249-408-11	s	CARBON 180 5% 1/4W
R2	⚠1-249-408-11	s	CARBON 180 5% 1/4W
R3	⚠1-249-408-11	s	CARBON 180 5% 1/4W
R4	⚠1-249-408-11	s	CARBON 180 5% 1/4W

LE-111 BOARD

Ref. No. or Q'ty	Part No.	SP	Description
1pc	1-646-592-11	o	PRINTED CIRCUIT BOARD, LE-111
CN1	1-566-478-11	o	PIN, SIL 6P
CN2	1-566-478-11	o	PIN, SIL 6P
D1	8-719-939-53	s	LED LB-203ML, GRN

LE-112 BOARD

Ref. No. or Q'ty	Part No.	SP	Description
1pc	1-646-593-11	o	PRINTED CIRCUIT BOARD, LE-112
1pc	3-678-050-01	o	SPACER(1)
CN1	1-566-484-11	o	PIN, SIL 12P
D1	8-719-030-51	s	LED LD-010MW, GRN
D2	8-719-030-51	s	LED LD-010MW, GRN
D3	8-719-030-51	s	LED LD-010MW, GRN

LE-113 BOARD

Ref. No. or Q'ty	Part No.	SP	Description
1pc	1-646-594-11	o	PRINTED CIRCUIT BOARD, LE-113
1pc	3-678-054-01	o	SPACER(2)
CN1	1-566-482-11	o	PIN, SIL 10P
CN2	1-566-482-11	o	PIN, SIL 10P
IC1	8-759-503-93	s	IC HDLG-2416
IC2	8-759-503-93	s	IC HDLG-2416
IC3	8-759-503-93	s	IC HDLG-2416

LE-114 BOARD

Ref. No. or Q'ty	Part No.	SP	Description
1pc	1-646-595-11	o	PRINTED CIRCUIT BOARD, LE-114
CN1	1-566-478-11	o	PIN, SIL 6P
CN2	1-566-478-11	o	PIN, SIL 6P
D1	8-719-939-53	s	LED LB-203ML, GRN

LE-115 BOARD

Ref. No. or Q'ty	Part No.	SP	Description
CN1	1-566-484-11	o	PIN, SIL 12P
D1	8-719-030-51	s	LED LD-010MW, GRN
D2	8-719-030-51	s	LED LD-010MW, GRN
D3	8-719-030-51	s	LED LD-010MW, GRN

NOTE: Please see page 9-1 for the parts that are not listed in the parts list.

LE-118 BOARD

Ref. No. or Q'ty	Part No.	SP	Description
1pc	A-8271-813-A	o	MOUNTED CIRCUIT BOARD, LE-118
2pcs	3-166-184-01	o	LEVER, PC BOARD
4pcs	7-622-207-05	s	N 2.6, TYPE 2
2pcs	7-626-320-11	s	PIN, SPRING 3X8
4pcs	7-628-254-40	s	SCREW +PS 2.6X12
C1	1-124-584-00	s	ELECT 100uF 20% 10V
C2	1-161-485-00	s	CERAMIC 0.1uF 50V
C3	1-124-584-00	s	ELECT 100uF 20% 10V
C4	1-161-485-00	s	CERAMIC 0.1uF 50V
C5	1-161-485-00	s	CERAMIC 0.1uF 50V
C6	1-161-485-00	s	CERAMIC 0.1uF 50V
C7	1-161-485-00	s	CERAMIC 0.1uF 50V
C100	1-161-485-00	s	CERAMIC 0.1uF 50V
C101	1-161-485-00	s	CERAMIC 0.1uF 50V
C102	1-161-485-00	s	CERAMIC 0.1uF 50V
C103	1-161-485-00	s	CERAMIC 0.1uF 50V
C104	1-124-584-00	s	ELECT 100uF 20% 10V
C105	1-162-208-31	s	CERAMIC 24PF 5% 50V
C106	1-162-208-31	s	CERAMIC 24PF 5% 50V
C107	1-161-485-00	s	CERAMIC 0.1uF 50V
C108	1-124-584-00	s	ELECT 100uF 20% 10V
CN5	1-566-513-11	s	CONNECTOR, FPC 13P
CN6	1-563-323-11	s	CONNECTOR, D-SUB 9P, FEMALE
CN7	1-569-170-11	o	CONNECTOR, COAXIAL, MALE
CNX2	1-506-748-11	o	CONNECTOR, DIN 96P, MALE
CNY2	1-506-748-11	o	CONNECTOR, DIN 96P, MALE
D3	8-719-421-11	s	DIODE LN15BP
IC100	8-759-948-40	s	IC DS1000M-50
IC101	8-759-244-84	s	IC TC74AC574P
IC102	8-759-244-84	s	IC TC74AC574P
L100	1-408-417-00	s	INDUCTOR 47uH
Q100	8-729-119-78	s	TRANSISTOR 2SC2785-HFE
Q101	8-729-119-76	s	TRANSISTOR 2SA1115P
R1	1-249-417-11	s	CARBON 1K 5% 1/4W
R2	1-249-411-11	s	CARBON 330 5% 1/4W
R100	1-215-428-00	s	METAL 2K 1% 1/6W
R101	1-215-428-00	s	METAL 2K 1% 1/6W
R102	1-215-428-00	s	METAL 2K 1% 1/6W
R103	1-215-428-00	s	METAL 2K 1% 1/6W
R104	1-215-428-00	s	METAL 2K 1% 1/6W
R105	1-215-428-00	s	METAL 2K 1% 1/6W
R106	1-215-428-00	s	METAL 2K 1% 1/6W
R107	1-215-428-00	s	METAL 2K 1% 1/6W
R108	1-215-428-00	s	METAL 2K 1% 1/6W
R109	1-215-428-00	s	METAL 2K 1% 1/6W
R110	1-249-417-11	s	CARBON 1K 5% 1/4W
R111	1-249-417-11	s	CARBON 1K 5% 1/4W
R112	1-249-417-11	s	CARBON 1K 5% 1/4W
R113	1-249-417-11	s	CARBON 1K 5% 1/4W
R114	1-249-417-11	s	CARBON 1K 5% 1/4W
R115	1-249-417-11	s	CARBON 1K 5% 1/4W
R116	1-249-417-11	s	CARBON 1K 5% 1/4W
R117	1-249-417-11	s	CARBON 1K 5% 1/4W
R118	1-249-417-11	s	CARBON 1K 5% 1/4W

NOTE: Please see page 9-1 for the parts that are not listed in the parts list.

(LE-118 BOARD)

Ref. No. or Q'ty	Part No.	SP	Description
R119	1-249-417-11	s	CARBON 1K 5% 1/4W
R120	1-249-425-11	s	CARBON 4.7K 5% 1/4W
R121	1-249-417-11	s	CARBON 1K 5% 1/4W
R122	1-249-417-11	s	CARBON 1K 5% 1/4W
R123	1-249-409-11	s	CARBON 220 5% 1/4W
R124	1-247-804-11	s	CARBON 75 5% 1/4W
R125	1-249-397-11	s	CARBON 22 5% 1/4W
R126	1-249-397-11	s	CARBON 22 5% 1/4W
R127	1-249-397-11	s	CARBON 22 5% 1/4W
R128	1-249-397-11	s	CARBON 22 5% 1/4W
R129	1-249-397-11	s	CARBON 22 5% 1/4W
R130	1-249-397-11	s	CARBON 22 5% 1/4W
R131	1-249-397-11	s	CARBON 22 5% 1/4W
R132	1-249-397-11	s	CARBON 22 5% 1/4W
R133	1-249-397-11	s	CARBON 22 5% 1/4W
R134	1-249-397-11	s	CARBON 22 5% 1/4W
R135	1-249-397-11	s	CARBON 22 5% 1/4W
R136	1-249-441-11	s	CARBON 100K 5% 1/4W
R137	1-249-441-11	s	CARBON 100K 5% 1/4W
R138	1-249-441-11	s	CARBON 100K 5% 1/4W
R139	1-249-441-11	s	CARBON 100K 5% 1/4W
R140	1-249-441-11	s	CARBON 100K 5% 1/4W
R141	1-249-441-11	s	CARBON 100K 5% 1/4W
R142	1-249-441-11	s	CARBON 100K 5% 1/4W
R143	1-249-441-11	s	CARBON 100K 5% 1/4W
R144	1-249-441-11	s	CARBON 100K 5% 1/4W
R145	1-249-441-11	s	CARBON 100K 5% 1/4W
R146	1-249-441-11	s	CARBON 100K 5% 1/4W
S1	1-571-146-11	s	SWITCH, ROTARY

LE-118(A) BOARD

Ref. No. or Q'ty	Part No.	SP	Description
1pc	A-8271-891-A	o	MOUNTED CIRCUIT BOARD, LE-118 (A)
2pcs	3-166-184-01	o	LEVER, PC BOARD
4pcs	7-621-259-75	s	SCREW +P 2.6X12
4pcs	7-622-207-05	s	N 2.6, TYPE 2
2pcs	7-626-320-11	s	PIN, SPRING 3X8
C1	1-124-584-00	s	ELECT 100uF 20% 10V
C2	1-161-485-00	s	CERAMIC 0.1uF 50V
C3	1-124-584-00	s	ELECT 100uF 20% 10V
C4	1-161-485-00	s	CERAMIC 0.1uF 50V
C5	1-161-485-00	s	CERAMIC 0.1uF 50V
C6	1-161-485-00	s	CERAMIC 0.1uF 50V
C7	1-161-485-00	s	CERAMIC 0.1uF 50V
C8	1-161-485-00	s	CERAMIC 0.1uF 50V
C9	1-162-282-31	s	CERAMIC 100PF 10% 50V
C10	1-162-282-31	s	CERAMIC 100PF 10% 50V
C100	1-161-485-00	s	CERAMIC 0.1uF 50V
C101	1-161-485-00	s	CERAMIC 0.1uF 50V
C102	1-161-485-00	s	CERAMIC 0.1uF 50V
C103	1-161-485-00	s	CERAMIC 0.1uF 50V
C104	1-124-584-00	s	ELECT 100uF 20% 10V
C105	1-162-208-31	s	CERAMIC 24PF 5% 50V
C106	1-162-208-31	s	CERAMIC 24PF 5% 50V
C107	1-161-485-00	s	CERAMIC 0.1uF 50V
C108	1-124-584-00	s	ELECT 100uF 20% 10V
CN5	1-566-513-11	s	CONNECTOR, FPC 13P
CN6	1-563-323-11	s	CONNECTOR, D-SUB 9P, FEMALE
CN7	1-569-170-11	o	CONNECTOR, COAXIAL, MALE
CNX2	1-506-748-11	o	CONNECTOR, DIN 96P, MALE
CNY2	1-506-748-11	o	CONNECTOR, DIN 96P, MALE
D3	8-719-421-11	s	DIODE LN15BP
IC1	8-759-916-14	s	IC SN74HC04N
IC100	8-759-948-40	s	IC DS1000M-50
IC101	8-759-244-84	s	IC TC74AC574P
IC102	8-759-244-84	s	IC TC74AC574P
L100	1-408-417-00	s	INDUCTOR 47uH
Q100	8-729-119-78	s	TRANSISTOR 2SC2785-HFE
Q101	8-729-119-76	s	TRANSISTOR 2SA1115P
R1	1-249-417-11	s	CARBON 1K 5% 1/4W
R2	1-249-411-11	s	CARBON 330 5% 1/4W
R3	1-249-441-11	s	CARBON 100K 5% 1/4W
R4	1-249-417-11	s	CARBON 1K 5% 1/4W
R5	1-249-441-11	s	CARBON 100K 5% 1/4W
R6	1-249-417-11	s	CARBON 1K 5% 1/4W
R7	1-249-397-11	s	CARBON 22 5% 1/4W
R8	1-249-441-11	s	CARBON 100K 5% 1/4W
R9	1-249-417-11	s	CARBON 1K 5% 1/4W
R10	1-249-397-11	s	CARBON 22 5% 1/4W
R11	1-249-397-11	s	CARBON 22 5% 1/4W
R100	1-215-428-00	s	METAL 2K 1% 1/6W
R101	1-215-428-00	s	METAL 2K 1% 1/6W
R102	1-215-428-00	s	METAL 2K 1% 1/6W
R103	1-215-428-00	s	METAL 2K 1% 1/6W
R104	1-215-428-00	s	METAL 2K 1% 1/6W
R105	1-215-428-00	s	METAL 2K 1% 1/6W
R106	1-215-428-00	s	METAL 2K 1% 1/6W

NOTE: Please see page 9-1 for the parts that are not listed in the parts list.

(LE-118(A) BOARD)

Ref. No. or Q'ty	Part No.	SP	Description
R107	1-215-428-00	s	METAL 2K 1% 1/6W
R108	1-215-428-00	s	METAL 2K 1% 1/6W
R109	1-215-428-00	s	METAL 2K 1% 1/6W
R110	1-249-417-11	s	CARBON 1K 5% 1/4W
R111	1-249-417-11	s	CARBON 1K 5% 1/4W
R112	1-249-417-11	s	CARBON 1K 5% 1/4W
R113	1-249-417-11	s	CARBON 1K 5% 1/4W
R114	1-249-417-11	s	CARBON 1K 5% 1/4W
R115	1-249-417-11	s	CARBON 1K 5% 1/4W
R116	1-249-417-11	s	CARBON 1K 5% 1/4W
R117	1-249-417-11	s	CARBON 1K 5% 1/4W
R118	1-249-417-11	s	CARBON 1K 5% 1/4W
R119	1-249-417-11	s	CARBON 1K 5% 1/4W
R120	1-249-425-11	s	CARBON 4.7K 5% 1/4W
R121	1-249-417-11	s	CARBON 1K 5% 1/4W
R122	1-249-417-11	s	CARBON 1K 5% 1/4W
R123	1-249-409-11	s	CARBON 220 5% 1/4W
R124	1-247-804-11	s	CARBON 75 5% 1/4W
R125	1-249-397-11	s	CARBON 22 5% 1/4W
R126	1-249-397-11	s	CARBON 22 5% 1/4W
R127	1-249-397-11	s	CARBON 22 5% 1/4W
R128	1-249-397-11	s	CARBON 22 5% 1/4W
R129	1-249-397-11	s	CARBON 22 5% 1/4W
R130	1-249-397-11	s	CARBON 22 5% 1/4W
R131	1-249-397-11	s	CARBON 22 5% 1/4W
R132	1-249-397-11	s	CARBON 22 5% 1/4W
R133	1-249-397-11	s	CARBON 22 5% 1/4W
R134	1-249-397-11	s	CARBON 22 5% 1/4W
R135	1-249-397-11	s	CARBON 22 5% 1/4W
R136	1-249-441-11	s	CARBON 100K 5% 1/4W
R137	1-249-441-11	s	CARBON 100K 5% 1/4W
R138	1-249-441-11	s	CARBON 100K 5% 1/4W
R139	1-249-441-11	s	CARBON 100K 5% 1/4W
R140	1-249-441-11	s	CARBON 100K 5% 1/4W
R141	1-249-441-11	s	CARBON 100K 5% 1/4W
R142	1-249-441-11	s	CARBON 100K 5% 1/4W
R143	1-249-441-11	s	CARBON 100K 5% 1/4W
R144	1-249-441-11	s	CARBON 100K 5% 1/4W
R145	1-249-441-11	s	CARBON 100K 5% 1/4W
R146	1-249-441-11	s	CARBON 100K 5% 1/4W
S1	1-571-146-11	s	SWITCH, ROTARY
S2	1-554-399-21	s	SWITCH, TOGGLE
S3	1-554-399-21	s	SWITCH, TOGGLE

MAT-4 BOARD

Ref. No. or Q'ty	Part No.	SP	Description
1pc	A-8271-812-A	o	MOUNTED CIRCUIT BOARD, MAT-4
1pc	3-166-184-01	o	LEVER, PC BOARD
2pcs	3-166-185-01	s	NUT, PLATE
2pcs	3-179-150-01	o	BRACKET, EXTENSION
2pcs	7-622-207-05	s	N 2.6, TYPE 2
1pc	7-626-320-11	s	PIN, SPRING 3X8
6pcs	7-628-254-40	s	SCREW +PS 2.6X12
6pcs	7-682-903-01	s	SCREW +PWH 3X5
8pcs	7-682-947-01	s	SCREW +PSW 3X6
8pcs	7-682-948-01	s	SCREW +PSW 3X8
8pcs	7-685-104-19	s	SCREW +P 2X6 TYPE2 SLIT
C1	1-163-251-11	s	CERAMIC, CHIP 100PF 5% 50V
CNA2	1-750-066-11	o	CONNECTOR, BB 50P, FEMALE
CNB2	1-750-066-11	o	CONNECTOR, BB 50P, FEMALE
CND2	1-750-066-11	o	CONNECTOR, BB 50P, FEMALE
CNX1	1-565-207-21	s	CONNECTOR, DIN 128P, MALE
CNY1	1-565-207-21	s	CONNECTOR, DIN 128P, MALE
CNZ1	1-506-748-11	o	CONNECTOR, DIN 96P, MALE
D1	8-719-800-76	s	DIODE 1SS226
F1	⚠1-576-031-11	s	FUSE 10A 125V
IC2	8-759-505-27	s	IC SN75ALS195J
IC3	8-759-945-30	s	IC SN75ALS194N
IC4	8-759-505-00	s	IC CXD8052Q
IC5	8-759-505-00	s	IC CXD8052Q
IC6	8-759-057-32	s	IC CAT35C104K
IC7	8-759-505-06	s	IC CXD8058Q
IC8	8-759-505-06	s	IC CXD8058Q
IC9	8-759-244-71	s	IC TC74AC540F
IC10	8-759-244-71	s	IC TC74AC540F
IC11	8-759-505-00	s	IC CXD8052Q
IC13	8-759-244-75	s	IC TC74AC541F
IC14	8-759-244-75	s	IC TC74AC541F
IC15	8-759-244-71	s	IC TC74AC540F
IC16	8-759-244-71	s	IC TC74AC540F
IC17	8-759-926-82	s	IC SN74HC574ANS
IC18	8-759-926-76	s	IC SN74HC540NS
IC19	8-759-927-46	s	IC SN74HC00NS
IC20	8-759-234-77	s	IC TC4S66F
IC21	8-759-947-47	s	IC SN74LS594N
IC22	8-759-945-30	s	IC SN75ALS194N
IC23	8-759-243-66	s	IC TC74ACT74F
IC24	8-759-160-12	s	IC CXD8827Q
IC25	8-759-160-12	s	IC CXD8827Q
IC26	8-759-926-42	s	IC SN74HC238NS
IC27	8-759-244-15	s	IC TC74AC240F
IC201	8-759-518-05	s	IC CXD8300Q
IC202	8-759-518-05	s	IC CXD8300Q
IC203	8-759-518-05	s	IC CXD8300Q
IC204	8-759-518-05	s	IC CXD8300Q
IC205	8-759-518-05	s	IC CXD8300Q
IC206	8-759-518-05	s	IC CXD8300Q

NOTE: Please see page 9-1 for the parts that are not listed in the parts list.

(MAT-4 BOARD)

Ref. No. or Q'ty	Part No.	SP	Description
TH1	1-809-179-11	s	THERMISTOR 1k 102AT-2

MB-482 BOARD

Ref. No. or Q'ty	Part No.	SP	Description
2pcs	3-178-213-21	s	SCREW +B 3X10
6pcs	3-179-120-01	o	SUPPORT
1pc	3-179-121-01	o	BRACKET, AC INLET
2pcs	3-711-649-01	s	STUD
80pcs	7-622-207-05	s	N 2.6, TYPE 2
80pcs	7-628-254-20	s	SCREW +PS 2.6X8
6pcs	7-682-249-09	s	SCREW +K 3X10
10pcs	7-682-903-01	s	SCREW +PWH 3X5
8pcs	1-580-355-11	o	HOUSING, DIN 96P
CNAT1	⚠1-580-375-21	o	INLET, AC 3P, MALE
CN10	---PENDING---	s	CONNECTOR 20P, MALE
CN20	---PENDING---	s	CONNECTOR 20P, MALE
CN30	⚠---PENDING---	s	CONNECTOR 8P, MALE

MIX-8 BOARD

Ref. No. or Q'ty	Part No.	SP	Description
1pc	A-8271-810-A	o	MOUNTED CIRCUIT BOARD, MIX-8
2pcs	3-166-184-01	o	LEVER, PC BOARD
2pcs	3-166-185-01	s	NUT, PLATE
2pcs	7-622-207-05	s	N 2.6, TYPE 2
2pcs	7-626-320-11	s	PIN, SPRING 3X8
6pcs	7-628-254-40	s	SCREW +PS 2.6X12
8pcs	7-682-948-01	s	SCREW +PSW 3X8
C1	1-163-251-11	s	CERAMIC, CHIP 100PF 5% 50V
C2	1-163-251-11	s	CERAMIC, CHIP 100PF 5% 50V
CNX1	1-565-207-21	s	CONNECTOR, DIN 128P, MALE
CNY1	1-565-207-21	s	CONNECTOR, DIN 128P, MALE
CNZ1	1-506-748-11	o	CONNECTOR, DIN 96P, MALE
COP1	1-564-948-21	o	PIN, SHORTING
COP2	1-564-948-21	o	PIN, SHORTING
COR1	1-562-579-21	s	PLUG, SHORTING
COR2	1-562-579-21	s	PLUG, SHORTING
D1	8-719-800-76	s	DIODE 1SS226
F1	⚠1-576-031-11	s	FUSE 10A 125V
IC1	8-759-505-27	s	IC SN75ALS195J
IC2	8-759-945-30	s	IC SN75ALS194N
IC3	8-759-505-00	s	IC CXD8052Q
IC4	8-759-720-48	s	IC CAT35C104HP
IC5	8-759-234-77	s	IC TC4S66F
IC7	8-759-244-75	s	IC TC74AC541F
IC8	8-759-244-71	s	IC TC74AC540F
IC20	8-759-926-82	s	IC SN74HC574ANS
IC21	8-759-243-09	s	IC TC74AC74F
IC22	8-759-320-87	s	IC HM63021P-28
IC30	8-759-244-71	s	IC TC74AC540F
IC31	8-759-244-15	s	IC TC74AC240F
IC32	8-759-244-71	s	IC TC74AC540F
IC33	8-759-244-71	s	IC TC74AC540F
IC34	8-759-244-75	s	IC TC74AC541F
IC35	8-759-244-15	s	IC TC74AC240F
IC36	8-759-926-23	s	IC SN74HC163NS
IC37	8-759-243-09	s	IC TC74AC74F
IC51	8-759-505-06	s	IC CXD8058Q
IC52	8-759-505-06	s	IC CXD8058Q
IC54	8-759-505-06	s	IC CXD8058Q
IC55	8-759-505-06	s	IC CXD8058Q
IC101	8-759-505-05	s	IC CXD8055
IC103	8-759-505-05	s	IC CXD8055
IC104	8-759-504-91	s	IC CXD8062Q
IC106	8-759-244-85	s	IC TC74AC574F
IC107	8-759-244-85	s	IC TC74AC574F
IC108	8-759-244-85	s	IC TC74AC574F
IC109	8-759-926-82	s	IC SN74HC574ANS
IC110	8-759-926-82	s	IC SN74HC574ANS
IC111	8-759-926-82	s	IC SN74HC574ANS
IC112	8-759-926-82	s	IC SN74HC574ANS
IC113	8-759-926-82	s	IC SN74HC574ANS
IC114	8-759-320-87	s	IC HM63021P-28
IC115	8-759-320-87	s	IC HM63021P-28

NOTE: Please see page 9-1 for the parts that are not listed in the parts list.

(MIX-8 BOARD)

Ref. No. or Q'ty	Part No.	SP	Description
IC116	8-759-320-87	s	IC HM63021P-28
IC117	8-759-320-87	s	IC HM63021P-28
IC118	8-759-320-87	s	IC HM63021P-28
IC120	8-759-320-87	s	IC HM63021P-28
IC122	8-759-320-87	s	IC HM63021P-28
IC124	8-759-320-87	s	IC HM63021P-28
IC201	8-759-505-05	s	IC CXD8055
IC203	8-759-505-05	s	IC CXD8055
IC204	8-759-504-91	s	IC CXD8062Q
IC206	8-759-244-85	s	IC TC74AC574F
IC207	8-759-244-85	s	IC TC74AC574F
IC208	8-759-244-85	s	IC TC74AC574F
IC209	8-759-926-82	s	IC SN74HC574ANS
IC210	8-759-926-82	s	IC SN74HC574ANS
IC211	8-759-926-82	s	IC SN74HC574ANS
IC212	8-759-926-82	s	IC SN74HC574ANS
IC213	8-759-926-82	s	IC SN74HC574ANS
IC214	8-759-320-87	s	IC HM63021P-28
IC215	8-759-320-87	s	IC HM63021P-28
IC216	8-759-320-87	s	IC HM63021P-28
IC217	8-759-320-87	s	IC HM63021P-28
IC218	8-759-320-87	s	IC HM63021P-28
IC220	8-759-320-87	s	IC HM63021P-28
IC222	8-759-320-87	s	IC HM63021P-28
IC224	8-759-320-87	s	IC HM63021P-28
IC300	8-759-505-05	s	IC CXD8055
IC302	8-759-505-05	s	IC CXD8055
IC306	8-759-244-85	s	IC TC74AC574F
IC307	8-759-244-85	s	IC TC74AC574F
IC308	8-759-244-85	s	IC TC74AC574F
IC312	8-759-926-82	s	IC SN74HC574ANS
IC313	8-759-926-82	s	IC SN74HC574ANS
IC314	8-759-926-82	s	IC SN74HC574ANS
IC320	8-759-504-97	s	IC CXD8190Q
IC321	8-759-504-97	s	IC CXD8190Q
IC322	8-759-320-87	s	IC HM63021P-28
IC324	8-759-320-87	s	IC HM63021P-28
IC326	8-759-320-87	s	IC HM63021P-28
IC328	8-759-320-87	s	IC HM63021P-28
IC334	8-759-505-03	s	IC CXD8066
IC336	8-759-505-04	s	IC CXD8067
IC338	8-759-504-97	s	IC CXD8190Q
IC342	8-759-244-85	s	IC TC74AC574F
IC343	8-759-244-85	s	IC TC74AC574F
R8	1-216-619-11	s	METAL, CHIP 47 0.5% 1/10W
R9	1-216-619-11	s	METAL, CHIP 47 0.5% 1/10W
TH1	1-809-179-11	s	THERMISTOR 1k 102AT-2

MIX-8(A) BOARD

Ref. No. or Q'ty	Part No.	SP	Description
1pc	A-8271-889-A	o	MOUNTED CIRCUIT BOARD, MIX-8 (A)
2pcs	3-166-184-01	o	LEVER, PC BOARD
2pcs	3-166-185-01	s	NUT, PLATE
6pcs	7-621-259-75	s	SCREW +P 2.6X12
2pcs	7-622-207-05	s	N 2.6, TYPE 2
2pcs	7-626-320-11	s	PIN, SPRING 3X8
8pcs	7-682-948-01	s	SCREW +PSW 3X8
C1	1-163-251-11	s	CERAMIC, CHIP 100PF 5% 50V
C2	1-163-251-11	s	CERAMIC, CHIP 100PF 5% 50V
CNX1	1-565-207-21	s	CONNECTOR, DIN 128P, MALE
CNY1	1-565-207-21	s	CONNECTOR, DIN 128P, MALE
CNZ1	1-506-748-11	o	CONNECTOR, DIN 96P, MALE
COP1	1-564-948-21	o	PIN, SHORTING
COP2	1-564-948-21	o	PIN, SHORTING
COR1	1-562-579-21	s	PLUG, SHORTING
COR2	1-562-579-21	s	PLUG, SHORTING
D1	8-719-800-76	s	DIODE 1SS226
F1	⚠1-576-031-11	s	FUSE 10A 125V
IC1	8-759-505-27	s	IC SN75ALS195J
IC2	8-759-945-30	s	IC SN75ALS194N
IC3	8-759-505-00	s	IC CXD8052Q
IC4	8-759-720-48	s	IC CAT35C104HP
IC5	8-759-234-77	s	IC TC4S66F
IC7	8-759-244-75	s	IC TC74AC541F
IC8	8-759-244-71	s	IC TC74AC540F
IC20	8-759-926-82	s	IC SN74HC574ANS
IC21	8-759-243-09	s	IC TC74AC74F
IC22	8-759-320-87	s	IC HM63021P-28
IC30	8-759-244-71	s	IC TC74AC540F
IC31	8-759-244-15	s	IC TC74AC240F
IC32	8-759-244-71	s	IC TC74AC540F
IC33	8-759-244-71	s	IC TC74AC540F
IC34	8-759-244-75	s	IC TC74AC541F
IC35	8-759-244-15	s	IC TC74AC240F
IC36	8-759-926-23	s	IC SN74HC163NS
IC37	8-759-243-09	s	IC TC74AC74F
IC51	8-759-505-06	s	IC CXD8058Q
IC52	8-759-505-06	s	IC CXD8058Q
IC53	8-759-505-06	s	IC CXD8058Q
IC54	8-759-505-06	s	IC CXD8058Q
IC55	8-759-505-06	s	IC CXD8058Q
IC101	8-759-505-05	s	IC CXD8055
IC103	8-759-505-05	s	IC CXD8055
IC104	8-759-504-91	s	IC CXD8062Q
IC105	8-759-504-91	s	IC CXD8062Q
IC106	8-759-244-85	s	IC TC74AC574F
IC107	8-759-244-85	s	IC TC74AC574F
IC108	8-759-244-85	s	IC TC74AC574F
IC109	8-759-926-82	s	IC SN74HC574ANS
IC110	8-759-926-82	s	IC SN74HC574ANS
IC111	8-759-926-82	s	IC SN74HC574ANS
IC112	8-759-926-82	s	IC SN74HC574ANS
IC113	8-759-926-82	s	IC SN74HC574ANS

NOTE: Please see page 9-1 for the parts that are not listed in the parts list.

(MIX-8(A) BOARD)

Ref. No. or Q'ty	Part No.	SP	Description
IC114	8-759-320-87	s	IC HM63021P-28
IC115	8-759-320-87	s	IC HM63021P-28
IC116	8-759-320-87	s	IC HM63021P-28
IC117	8-759-320-87	s	IC HM63021P-28
IC118	8-759-320-87	s	IC HM63021P-28
IC119	8-759-320-87	s	IC HM63021P-28
IC120	8-759-320-87	s	IC HM63021P-28
IC121	8-759-320-87	s	IC HM63021P-28
IC122	8-759-320-87	s	IC HM63021P-28
IC123	8-759-320-87	s	IC HM63021P-28
IC124	8-759-320-87	s	IC HM63021P-28
IC125	8-759-320-87	s	IC HM63021P-28
IC126	8-759-926-82	s	IC SN74HC574ANS
IC127	8-759-926-82	s	IC SN74HC574ANS
IC128	8-759-926-82	s	IC SN74HC574ANS
IC129	8-759-926-82	s	IC SN74HC574ANS
IC130	8-759-926-82	s	IC SN74HC574ANS
IC201	8-759-505-05	s	IC CXD8055
IC203	8-759-505-05	s	IC CXD8055
IC204	8-759-504-91	s	IC CXD8062Q
IC205	8-759-504-91	s	IC CXD8062Q
IC206	8-759-244-85	s	IC TC74AC574F
IC207	8-759-244-85	s	IC TC74AC574F
IC208	8-759-244-85	s	IC TC74AC574F
IC209	8-759-926-82	s	IC SN74HC574ANS
IC210	8-759-926-82	s	IC SN74HC574ANS
IC211	8-759-926-82	s	IC SN74HC574ANS
IC212	8-759-926-82	s	IC SN74HC574ANS
IC213	8-759-926-82	s	IC SN74HC574ANS
IC214	8-759-320-87	s	IC HM63021P-28
IC215	8-759-320-87	s	IC HM63021P-28
IC216	8-759-320-87	s	IC HM63021P-28
IC217	8-759-320-87	s	IC HM63021P-28
IC218	8-759-320-87	s	IC HM63021P-28
IC219	8-759-320-87	s	IC HM63021P-28
IC220	8-759-320-87	s	IC HM63021P-28
IC221	8-759-320-87	s	IC HM63021P-28
IC222	8-759-320-87	s	IC HM63021P-28
IC223	8-759-320-87	s	IC HM63021P-28
IC224	8-759-320-87	s	IC HM63021P-28
IC225	8-759-320-87	s	IC HM63021P-28
IC226	8-759-926-82	s	IC SN74HC574ANS
IC227	8-759-926-82	s	IC SN74HC574ANS
IC228	8-759-926-82	s	IC SN74HC574ANS
IC229	8-759-926-82	s	IC SN74HC574ANS
IC230	8-759-926-82	s	IC SN74HC574ANS
IC300	8-759-505-05	s	IC CXD8055
IC302	8-759-505-05	s	IC CXD8055
IC306	8-759-244-85	s	IC TC74AC574F
IC307	8-759-244-85	s	IC TC74AC574F
IC308	8-759-244-85	s	IC TC74AC574F
IC309	8-759-926-82	s	IC SN74HC574ANS
IC310	8-759-926-82	s	IC SN74HC574ANS
IC311	8-759-926-82	s	IC SN74HC574ANS
IC312	8-759-926-82	s	IC SN74HC574ANS
IC313	8-759-926-82	s	IC SN74HC574ANS
IC314	8-759-926-82	s	IC SN74HC574ANS
IC320	8-759-504-97	s	IC CXD8190Q
IC321	8-759-504-97	s	IC CXD8190Q

(MIX-8(A) BOARD)

Ref. No. or Q'ty	Part No.	SP	Description
IC322	8-759-320-87	s	IC HM63021P-28
IC323	8-759-320-87	s	IC HM63021P-28
IC324	8-759-320-87	s	IC HM63021P-28
IC325	8-759-320-87	s	IC HM63021P-28
IC326	8-759-320-87	s	IC HM63021P-28
IC327	8-759-320-87	s	IC HM63021P-28
IC328	8-759-320-87	s	IC HM63021P-28
IC329	8-759-320-87	s	IC HM63021P-28
IC334	8-759-505-03	s	IC CXD8066
IC335	8-759-505-03	s	IC CXD8066
IC336	8-759-505-04	s	IC CXD8067
IC337	8-759-505-04	s	IC CXD8067
IC338	8-759-504-97	s	IC CXD8190Q
IC339	8-759-948-31	s	IC CXD1319AQ
IC342	8-759-244-85	s	IC TC74AC574F
IC343	8-759-244-85	s	IC TC74AC574F
R8	1-216-619-11	s	METAL, CHIP 47 0.5% 1/10W
R9	1-216-619-11	s	METAL, CHIP 47 0.5% 1/10W
TH1	1-809-179-11	s	THERMISTOR 1k 102AT-2

MT-90 BOARD

Ref. No. or Q'ty	Part No.	SP	Description
2pcs	3-166-184-01	o	LEVER, PC BOARD
1pc	3-179-230-01	o	JOINT
2pcs	3-655-139-21	o	SHAFT, FLANGE, 1.2
2pcs	3-703-074-00	s	CAP 3, SHAFT
3pcs	7-682-903-01	s	SCREW +PWH 3X5
16pcs	7-685-104-19	s	SCREW +P 2X6 TYPE2 SLIT
CNA1	1-750-250-11	o	CONNECTOR, BB 50P, MALE
CNA2	1-750-066-11	o	CONNECTOR, BB 50P, FEMALE
CNB1	1-750-250-11	o	CONNECTOR, BB 50P, MALE
CNB2	1-750-066-11	o	CONNECTOR, BB 50P, FEMALE
CND1	1-750-250-11	o	CONNECTOR, BB 50P, MALE
CND2	1-750-066-11	o	CONNECTOR, BB 50P, FEMALE
IC101	8-759-505-07	s	IC CXD8059
IC102	8-759-505-07	s	IC CXD8059
IC103	8-759-504-90	s	IC CXD8063Q
IC104	8-759-504-90	s	IC CXD8063Q
IC105	8-759-504-97	s	IC CXD8190Q
IC106	8-759-504-91	s	IC CXD8062Q
IC107	8-759-505-08	s	IC CXD8060Q
IC108	8-759-504-99	s	IC CXD8065
IC109	8-759-057-32	s	IC CAT35C104K
IC110	8-759-239-23	s	IC TC74HC86AF

NOTE: Please see page 9-1 for the parts that are not listed in the parts list.

OUT-3 BOARD

Ref. No. or Q'ty	Part No.	SP	Description
1pc	A-8271-811-A	o	MOUNTED CIRCUIT BOARD, OUT-3
2pcs	3-166-184-01	o	LEVER, PC BOARD
2pcs	3-166-185-01	s	NUT, PLATE
2pcs	7-622-207-05	s	N 2.6, TYPE 2
2pcs	7-626-320-11	s	PIN, SPRING 3X8
6pcs	7-628-254-40	s	SCREW +PS 2.6X12
9pcs	7-682-948-01	s	SCREW +PSW 3X8
C56	1-163-251-11	s	CERAMIC, CHIP 100PF 5% 50V
C57	1-163-251-11	s	CERAMIC, CHIP 100PF 5% 50V
C58	1-126-346-41	s	ELECT 100uF 20% 6.3V
C59	1-126-346-41	s	ELECT 100uF 20% 6.3V
C60	1-126-346-41	s	ELECT 100uF 20% 6.3V
C61	1-126-346-41	s	ELECT 100uF 20% 6.3V
C70	1-163-239-11	s	CERAMIC, CHIP 33PF 5% 50V
C71	1-163-239-11	s	CERAMIC, CHIP 33PF 5% 50V
CN10A2	1-563-752-11	o	SOCKET, SIL 10P
CN10B2	1-563-752-11	o	SOCKET, SIL 10P
CN10C2	1-563-752-11	o	SOCKET, SIL 10P
CN10D2	1-563-752-11	o	SOCKET, SIL 10P
CN10E2	1-563-752-11	o	SOCKET, SIL 10P
CN11A2	1-563-752-11	o	SOCKET, SIL 10P
CN11B2	1-563-752-11	o	SOCKET, SIL 10P
CN11C2	1-563-752-11	o	SOCKET, SIL 10P
CN11D2	1-563-752-11	o	SOCKET, SIL 10P
CN11E2	1-563-752-11	o	SOCKET, SIL 10P
CN12A2	1-563-752-11	o	SOCKET, SIL 10P
CN12B2	1-563-752-11	o	SOCKET, SIL 10P
CN12C2	1-563-752-11	o	SOCKET, SIL 10P
CN12D2	1-563-752-11	o	SOCKET, SIL 10P
CN12E2	1-563-752-11	o	SOCKET, SIL 10P
CN13A2	1-563-752-11	o	SOCKET, SIL 10P
CN13B2	1-563-752-11	o	SOCKET, SIL 10P
CN13C2	1-563-752-11	o	SOCKET, SIL 10P
CN13D2	1-563-752-11	o	SOCKET, SIL 10P
CN13E2	1-563-752-11	o	SOCKET, SIL 10P
CN14A2	1-563-752-11	o	SOCKET, SIL 10P
CN14B2	1-563-752-11	o	SOCKET, SIL 10P
CN14C2	1-563-752-11	o	SOCKET, SIL 10P
CN14D2	1-563-752-11	o	SOCKET, SIL 10P
CN14E2	1-563-752-11	o	SOCKET, SIL 10P
CN15A2	1-563-752-11	o	SOCKET, SIL 10P
CN15B2	1-563-752-11	o	SOCKET, SIL 10P
CN15C2	1-563-752-11	o	SOCKET, SIL 10P
CN15D2	1-563-752-11	o	SOCKET, SIL 10P
CN15E2	1-563-752-11	o	SOCKET, SIL 10P
CN16A2	1-563-752-11	o	SOCKET, SIL 10P
CN16B2	1-563-752-11	o	SOCKET, SIL 10P
CN16C2	1-563-752-11	o	SOCKET, SIL 10P
CN16D2	1-563-752-11	o	SOCKET, SIL 10P
CN16E2	1-563-752-11	o	SOCKET, SIL 10P
CN17A2	1-563-752-11	o	SOCKET, SIL 10P
CN17B2	1-563-752-11	o	SOCKET, SIL 10P
CN17C2	1-563-752-11	o	SOCKET, SIL 10P
CN17D2	1-563-752-11	o	SOCKET, SIL 10P
CN17E2	1-563-752-11	o	SOCKET, SIL 10P
CN18A2	1-563-752-11	o	SOCKET, SIL 10P
CN18B2	1-563-752-11	o	SOCKET, SIL 10P
CN18C2	1-563-752-11	o	SOCKET, SIL 10P

(OUT-3 BOARD)

Ref. No. or Q'ty	Part No.	SP	Description
CN18D2	1-563-752-11	o	SOCKET, SIL 10P
CN18E2	1-563-752-11	o	SOCKET, SIL 10P
CN19A2	1-563-752-11	o	SOCKET, SIL 10P
CN19B2	1-563-752-11	o	SOCKET, SIL 10P
CN19C2	1-563-752-11	o	SOCKET, SIL 10P
CN19D2	1-563-752-11	o	SOCKET, SIL 10P
CN19E2	1-563-752-11	o	SOCKET, SIL 10P
CNX1	1-565-207-21	s	CONNECTOR, DIN 128P, MALE
CNY1	1-565-207-21	s	CONNECTOR, DIN 128P, MALE
D1	8-719-800-76	s	DIODE 1SS226
D2	8-719-800-76	s	DIODE 1SS226
F1	⚠1-576-031-11	s	FUSE 10A 125V
F2	⚠1-576-031-11	s	FUSE 10A 125V
IC1	8-759-505-27	s	IC SN75ALS195J
IC2	8-759-945-30	s	IC SN75ALS194N
IC3	8-759-234-77	s	IC TC4S66F
IC4	8-759-244-71	s	IC TC74AC540F
IC5	8-759-505-00	s	IC CXD8052Q
IC6	8-759-013-95	s	IC MC74HC589F
IC7	8-759-013-95	s	IC MC74HC589F
IC9	8-759-244-75	s	IC TC74AC541F
IC10	8-759-032-59	s	IC MC74HC595AF
IC11	8-759-947-47	s	IC SN74LS594N
IC13	8-759-244-71	s	IC TC74AC540F
IC14	8-759-244-71	s	IC TC74AC540F
IC15	8-759-076-03	s	IC MB88346BPF
IC16	8-759-505-06	s	IC CXD8058Q
IC17	8-759-244-85	s	IC TC74AC574F
IC18	8-759-948-40	s	IC DS1000M-50
IC19	8-759-505-06	s	IC CXD8058Q
IC20	8-759-244-71	s	IC TC74AC540F
IC22	8-759-012-02	s	IC MC10H124M
IC23	8-759-505-06	s	IC CXD8058Q
IC24	8-759-323-08	s	IC HM63021FP-28
IC25	8-759-323-08	s	IC HM63021FP-28
IC26	8-759-012-13	s	IC MC10H125M
IC27	8-759-012-13	s	IC MC10H125M
IC28	8-759-012-13	s	IC MC10H125M
IC29	8-759-245-77	s	IC TC74ACT574F
IC30	8-759-245-77	s	IC TC74ACT574F
IC32	8-759-926-50	s	IC SN74HC251ANS
IC33	8-759-926-50	s	IC SN74HC251ANS
IC34	8-759-926-42	s	IC SN74HC238NS
IC35	8-759-926-42	s	IC SN74HC238NS
IC36	8-759-243-09	s	IC TC74AC74F
IC37	8-759-504-97	s	IC CXD8190Q
IC38	8-759-057-32	s	IC CAT35C104K
IC39	8-759-505-02	s	IC CXD8053Q
IC40	8-759-505-02	s	IC CXD8053Q
IC41	8-759-504-97	s	IC CXD8190Q
IC42	8-759-518-79	s	IC MB88325PF
IC43	8-759-927-46	s	IC SN74HC00NS
IC44	8-759-243-19	s	IC TC7SU04F
IC45	8-759-505-00	s	IC CXD8052Q
IC46	8-759-076-03	s	IC MB88346BPF
IC47	8-759-012-02	s	IC MC10H124M

NOTE: Please see page 9-1 for the parts that are not listed in the parts list.

(OUT-3 BOARD)

Ref. No. or Q'ty	Part No.	SP	Description
IC48	8-759-012-02	s	IC MC10H124M
IC101	8-759-244-85	s	IC TC74AC574F
IC102	8-759-244-85	s	IC TC74AC574F
IC103	8-759-244-85	s	IC TC74AC574F
IC104	8-759-244-85	s	IC TC74AC574F
IC105	8-759-244-85	s	IC TC74AC574F
IC106	8-759-244-85	s	IC TC74AC574F
IC107	8-759-244-85	s	IC TC74AC574F
IC108	8-759-244-85	s	IC TC74AC574F
IC109	8-759-244-85	s	IC TC74AC574F
IC110	8-759-244-85	s	IC TC74AC574F
IC111	8-759-244-85	s	IC TC74AC574F
IC112	8-759-244-85	s	IC TC74AC574F
IC113	8-759-244-85	s	IC TC74AC574F
IC114	8-759-244-85	s	IC TC74AC574F
IC115	8-759-244-85	s	IC TC74AC574F
IC116	8-759-244-85	s	IC TC74AC574F
IC117	8-759-244-85	s	IC TC74AC574F
IC118	8-759-244-85	s	IC TC74AC574F
IC119	8-759-244-85	s	IC TC74AC574F
IC120	8-759-244-85	s	IC TC74AC574F
IC121	8-759-244-85	s	IC TC74AC574F
IC122	8-759-244-85	s	IC TC74AC574F
IC123	8-759-244-85	s	IC TC74AC574F
IC124	8-759-244-85	s	IC TC74AC574F
IC125	8-759-244-85	s	IC TC74AC574F
IC126	8-759-244-85	s	IC TC74AC574F
IC127	8-759-244-85	s	IC TC74AC574F
IC128	8-759-504-95	s	IC CXD8026Q
IC129	8-759-504-95	s	IC CXD8026Q
IC130	8-759-244-71	s	IC TC74AC540F
L1	1-421-370-00	s	COIL, CHOKE
L2	1-421-370-00	s	COIL, CHOKE
Q1	8-729-216-22	s	TRANSISTOR 2SA1162
Q2	8-729-216-22	s	TRANSISTOR 2SA1162
Q3	8-729-216-22	s	TRANSISTOR 2SA1162
R32	1-216-659-11	s	METAL, CHIP 2.2K 0.5% 1/10W
R33	1-216-659-11	s	METAL, CHIP 2.2K 0.5% 1/10W
R60	1-216-647-11	s	METAL, CHIP 680 0.5% 1/10W
R61	1-216-647-11	s	METAL, CHIP 680 0.5% 1/10W
R62	1-216-647-11	s	METAL, CHIP 680 0.5% 1/10W
R63	1-216-647-11	s	METAL, CHIP 680 0.5% 1/10W
R64	1-216-647-11	s	METAL, CHIP 680 0.5% 1/10W
R65	1-216-647-11	s	METAL, CHIP 680 0.5% 1/10W
R88	1-218-776-11	s	METAL, CHIP 1M 0.5% 1/10W
R871	1-216-623-11	s	METAL, CHIP 68 0.5% 1/10W
R872	1-216-623-11	s	METAL, CHIP 68 0.5% 1/10W
R873	1-216-623-11	s	METAL, CHIP 68 0.5% 1/10W
R874	1-216-623-11	s	METAL, CHIP 68 0.5% 1/10W
R875	1-216-623-11	s	METAL, CHIP 68 0.5% 1/10W
R876	1-216-623-11	s	METAL, CHIP 68 0.5% 1/10W
R877	1-216-623-11	s	METAL, CHIP 68 0.5% 1/10W
R878	1-216-623-11	s	METAL, CHIP 68 0.5% 1/10W
R879	1-216-623-11	s	METAL, CHIP 68 0.5% 1/10W
R880	1-216-623-11	s	METAL, CHIP 68 0.5% 1/10W
TH1	1-809-179-11	s	THERMISTOR 1k 102AT-2

NOTE: Please see page 9-1 for the parts that are not listed in the parts list.

(OUT-3 BOARD)

Ref. No. or Q'ty	Part No.	SP	Description
X1	1-567-927-11	s	RESONATOR, CERAMIC 16.00MHz

RE-96 BOARD

Ref. No. or Q'ty	Part No.	SP	Description
1pc	A-8271-814-A	o	MOUNTED CIRCUIT BOARD, RE-96
18pcs	2-280-622-21	o	SUPPORT (M3X10), HEXAGON
3pcs	3-179-123-01	o	PAD, THERMAL
3pcs	3-179-163-01	o	HEAT SINK
2pcs	3-331-713-01	o	HEAT SINK (B)
2pcs	7-682-547-04	s	SCREW +B3X6
18pcs	7-682-549-04	s	SCREW +B 3X10
18pcs	7-682-948-01	s	SCREW +PSW 3X8
4pcs	7-685-871-01	s	SCREW +BVTT 3X6 (S)
C1	⚠1-137-108-61	s	FILM 0.1uF 20% 250V
C2	⚠1-161-742-00	s	CERAMIC 0.0022uF 20% 400V
C3	⚠1-161-742-00	s	CERAMIC 0.0022uF 20% 400V
C4	⚠1-162-578-81	s	CERAMIC 0.0047uF 20% 400V
C5	⚠1-162-578-81	s	CERAMIC 0.0047uF 20% 400V
C6	⚠1-137-111-11	s	FILM 1uF 20% 250V
C7	⚠1-137-111-11	s	FILM 1uF 20% 250V
C9	1-161-485-00	s	CERAMIC 0.1uF 50V
C10	1-161-898-11	s	CERAMIC 0.47uF 50V
C11	⚠1-161-744-81	s	CERAMIC 0.01uF 400V
C12	⚠1-161-744-81	s	CERAMIC 0.01uF 400V
C13	⚠1-161-744-81	s	CERAMIC 0.01uF 400V
C14	⚠1-161-744-81	s	CERAMIC 0.01uF 400V
C15	1-125-470-11	s	ELECT 560uF 20% 400V
C16	1-125-470-11	s	ELECT 560uF 20% 400V
C17	1-125-470-11	s	ELECT 560uF 20% 400V
C18	1-125-470-11	s	ELECT 560uF 20% 400V
C19	1-125-470-11	s	ELECT 560uF 20% 400V
C20	1-125-470-11	s	ELECT 560uF 20% 400V
C21	1-125-470-11	s	ELECT 560uF 20% 400V
C22	1-125-470-11	s	ELECT 560uF 20% 400V
C31	1-161-896-11	s	CERAMIC 0.22uF 50V
C32	⚠1-164-320-11	s	CERAMIC 0.001uF 20% 400V
C33	1-162-765-11	s	CERAMIC 0.001uF 5% 50V
C34	1-161-896-11	s	CERAMIC 0.22uF 50V
C35	⚠1-164-320-11	s	CERAMIC 0.001uF 20% 400V
C36	1-162-765-11	s	CERAMIC 0.001uF 5% 50V
C37	1-161-896-11	s	CERAMIC 0.22uF 50V
C38	⚠1-164-320-11	s	CERAMIC 0.001uF 20% 400V
C39	1-162-765-11	s	CERAMIC 0.001uF 5% 50V
C40	1-124-520-11	s	ELECT 3300uF 20% 10V
C41	1-161-900-11	s	CERAMIC 1uF 50V
C42	1-161-896-11	s	CERAMIC 0.22uF 50V
C43	1-161-896-11	s	CERAMIC 0.22uF 50V
C44	1-161-896-11	s	CERAMIC 0.22uF 50V
CN1	⚠1-564-104-00	o	CONNECTOR, VH 3P, MALE
CN2	⚠1-564-104-00	o	CONNECTOR, VH 3P, MALE
CN3	⚠1-564-321-00	o	CONNECTOR, VH 2P, MALE
CN4	⚠1-564-321-00	o	CONNECTOR, VH 2P, MALE
CN5	⚠1-564-321-00	o	CONNECTOR, VH 2P, MALE
CN6	⚠1-564-321-00	o	CONNECTOR, VH 2P, MALE
CN7	1-564-242-00	o	CONNECTOR 5P, MALE
CN8	1-564-242-00	o	CONNECTOR 5P, MALE
CN9	1-564-242-00	o	CONNECTOR 5P, MALE
CN10	1-564-242-00	o	CONNECTOR 5P, MALE
CN11	1-564-242-00	o	CONNECTOR 5P, MALE
CN12	1-564-242-00	o	CONNECTOR 5P, MALE
CN13	1-506-468-11	s	CONNECTOR 3P, MALE
CN14	1-506-702-11	o	CONNECTOR, ILG 3P, MALE
CN15	1-506-702-11	o	CONNECTOR, ILG 3P, MALE

NOTE: Please see page 9-1 for the parts that are not listed in the parts list.

(RE-96 BOARD)

Ref. No. or Q'ty	Part No.	SP	Description
CN16	1-506-702-11	o	CONNECTOR, ILG 3P, MALE
CN17	1-564-241-00	o	CONNECTOR 4P, MALE
CP1	1-466-411-11	s	CONVERTER, DC-DC
CP2	1-466-411-11	s	CONVERTER, DC-DC
CP3	1-466-411-11	s	CONVERTER, DC-DC
D1	8-719-026-50	s	DIODE 10E4
D2	8-719-026-50	s	DIODE 10E4
D3	8-719-912-20	s	DIODE 1SS120
D4	8-719-912-20	s	DIODE 1SS120
D5	8-719-525-40	s	DIODE S25VB40
D6	8-719-230-04	s	DIODE 30D4
D7	8-719-912-20	s	DIODE 1SS120
D8	8-719-912-20	s	DIODE 1SS120
D9	8-719-912-20	s	DIODE 1SS120
D11	8-729-021-04	s	THYRISTOR CR6CM-8
D12	8-729-021-04	s	THYRISTOR CR6CM-8
D13	8-719-920-05	s	DIODE SLP281C-50
D14	8-719-920-05	s	DIODE SLP281C-50
D15	8-719-920-05	s	DIODE SLP281C-50
F1	⚠1-532-496-00	s	FUSE, THERMAL 109DEG-C 10A 250V
IC1	8-759-908-15	s	IC TL431CLP
IC2	8-759-158-16	s	IC TLC372CP
L1	1-409-309-00	s	COIL, CHOKE 72uH
LF1	⚠1-424-402-11	s	FILTER, LINE
PH1	8-719-820-89	s	PHOTOCOUPLER TLP560J
Q4	8-729-012-83	s	TRANSISTOR 2SK679A
Q5	8-729-012-83	s	TRANSISTOR 2SK679A
Q6	8-729-012-83	s	TRANSISTOR 2SK679A
R1	⚠1-214-937-00	s	METAL 1M 1% 1/2W
R2	1-214-832-00	s	METAL 47 1% 1/2W
R3	⚠1-207-699-00	s	WIREWOUND 4.7 10% 8W
R4	⚠1-207-699-00	s	WIREWOUND 4.7 10% 8W
R5	⚠1-205-921-11	s	WIREWOUND 22k 5% 5W
R6	⚠1-216-468-21	s	METAL 82K 5% 2W
R7	1-214-913-00	s	METAL 100K 1% 1/2W
R8	1-214-911-00	s	METAL 82K 1% 1/2W
R9	1-214-937-00	s	METAL 1M 1% 1/2W
R10	1-214-937-00	s	METAL 1M 1% 1/2W
R11	1-214-901-81	s	METAL 33K 1% 1/2W
R12	1-214-896-81	s	METAL 20K 1% 1/2W
R13	1-214-888-00	s	METAL 10K 1% 1/2W
R14	⚠1-207-975-00	s	WIREWOUND 1k 10% 8W
R15	1-249-422-11	s	CARBON 2.7K 5% 1/4W
R16	1-249-422-11	s	CARBON 2.7K 5% 1/4W
R17	1-249-422-11	s	CARBON 2.7K 5% 1/4W
R18	1-249-417-11	s	CARBON 1K 5% 1/4W
R19	1-215-403-00	s	METAL 180 1% 1/6W
R20	1-215-403-00	s	METAL 180 1% 1/6W
R21	1-215-403-00	s	METAL 180 1% 1/6W
R22	1-215-445-00	s	METAL 10K 1% 1/6W
R23	1-215-445-00	s	METAL 10K 1% 1/6W
R24	1-215-445-00	s	METAL 10K 1% 1/6W
R25	1-215-445-00	s	METAL 10K 1% 1/6W
R26	1-215-445-00	s	METAL 10K 1% 1/6W

(RE-96 BOARD)

Ref. No. or Q'ty	Part No.	SP	Description
R27	1-215-445-00	s	METAL 10K 1% 1/6W
RV1	1-237-500-21	s	RES, ADJ METAL 1K
RV2	1-237-500-21	s	RES, ADJ METAL 1K
RV3	1-237-500-21	s	RES, ADJ METAL 1K
TH1	1-809-179-11	s	THERMISTOR 1k 102AT-2
VDR1	1-806-356-00	s	VARISTOR ENB461-10A

SD-30 BOARD

Ref. No. or Q'ty	Part No.	SP	Description
2pcs	3-166-184-01	o	LEVER, PC BOARD
4pcs	7-622-207-05	s	N 2.6, TYPE 2
2pcs	7-626-320-11	s	PIN, SPRING 3X8
4pcs	7-628-254-40	s	SCREW +PS 2.6X12
C9	1-163-251-11	s	CERAMIC, CHIP 100PF 5% 50V
C10	1-163-251-11	s	CERAMIC, CHIP 100PF 5% 50V
C105	1-163-239-11	s	CERAMIC, CHIP 33PF 5% 50V
C106	1-163-239-11	s	CERAMIC, CHIP 33PF 5% 50V
C217	1-163-121-00	s	CERAMIC, CHIP 150PF 5% 50V
C218	1-163-127-00	s	CERAMIC, CHIP 270PF 5% 50V
C223	1-163-222-11	s	CERAMIC, CHIP 5PF 50V
C224	1-163-222-11	s	CERAMIC, CHIP 5PF 50V
C225	1-163-222-11	s	CERAMIC, CHIP 5PF 50V
C310	1-163-239-11	s	CERAMIC, CHIP 33PF 5% 50V
C311	1-163-239-11	s	CERAMIC, CHIP 33PF 5% 50V
C400	1-163-125-00	s	CERAMIC, CHIP 220PF 5% 50V
C403	1-163-243-11	s	CERAMIC, CHIP 47PF 5% 50V
C410	1-163-275-11	s	CERAMIC, CHIP 0.001uF 5% 50V
C411	1-135-091-00	s	TANTALUM, CHIP 1uF 10% 16V
C419	1-135-091-00	s	TANTALUM, CHIP 1uF 10% 16V
C420	1-164-232-11	s	CERAMIC 0.01uF 10% 100V
C425	1-135-216-11	s	TANTALUM, CHIP 10uF 20% 10V
C435	1-163-275-11	s	CERAMIC, CHIP 0.001uF 5% 50V
C436	1-135-091-00	s	TANTALUM, CHIP 1uF 10% 16V
C445	1-124-287-00	s	ELECT 10uF 20% 10V
C446	1-163-251-11	s	CERAMIC, CHIP 100PF 5% 50V
C449	1-163-251-11	s	CERAMIC, CHIP 100PF 5% 50V
C460	1-135-211-11	s	TANTALUM, CHIP 6.8uF 20% 6.3V
C461	1-135-211-11	s	TANTALUM, CHIP 6.8uF 20% 6.3V
C462	1-163-085-00	s	CERAMIC, CHIP 2PF 50V
CN5	1-566-513-11	s	CONNECTOR, FPC 13P
CN6	1-563-323-11	s	CONNECTOR, D-SUB 9P, FEMALE
CN7	1-569-170-11	o	CONNECTOR, COAXIAL, MALE
CNX2	1-506-748-11	o	CONNECTOR, DIN 96P, MALE
CNY2	1-506-748-11	o	CONNECTOR, DIN 96P, MALE
CV400	1-141-423-61	s	CAP, TRIMMER 20PF
D3	8-719-421-11	s	DIODE LN15BP
D200	8-719-800-76	s	DIODE 1SS226
D400	8-719-800-76	s	DIODE 1SS226
D402	8-719-800-76	s	DIODE 1SS226
FL400	1-236-174-11	s	FILTER, LOW-PASS
IC1	8-759-925-74	s	IC TC74HC04NS
IC2	8-759-057-32	s	IC CAT35C104K
IC100	8-759-948-40	s	IC DS1000M-50
IC101	8-759-244-85	s	IC TC74AC574F
IC102	8-759-244-85	s	IC TC74AC574F
IC200	8-759-244-85	s	IC TC74AC574F
IC201	8-759-244-85	s	IC TC74AC574F
IC202	8-759-504-97	s	IC CXD8190Q
IC203	8-759-505-02	s	IC CXD8053Q
IC204	8-759-505-02	s	IC CXD8053Q
IC205	8-759-099-78	s	IC CXD8338AQ
IC206	8-759-012-02	s	IC MC10H124M
IC207	8-759-012-02	s	IC MC10H124M
IC208	8-759-012-02	s	IC MC10H124M

NOTE: Please see page 9-1 for the parts that are not listed in the parts list.

(SD-30 BOARD)

Ref. No. or Q'ty	Part No.	SP	Description
IC209	8-741-601-02	s	IC SBX1601A
IC210	8-752-050-69	s	IC CXA1389AQ
IC211	8-759-012-13	s	IC MC10H125M
IC212	8-759-505-06	s	IC CXD8058Q
IC213	8-759-925-74	s	IC TC74HC04NS
IC300	8-759-244-15	s	IC TC74AC240F
IC301	8-759-244-85	s	IC TC74AC574F
IC302	8-759-925-74	s	IC TC74HC04NS
IC303	8-759-505-06	s	IC CXD8058Q
IC304	8-759-233-44	s	IC TC74HC595AF
IC305	8-759-518-79	s	IC MB88325PF
IC306	8-759-076-03	s	IC MB88346BPF
IC307	8-759-506-92	s	IC LT1009CZ
IC308	8-759-908-17	s	IC TL082CPS
IC309	8-759-927-46	s	IC SN74HC00NS
IC310	8-759-243-19	s	IC TC7SU04F
IC400	8-759-996-34	s	IC LM360M
IC401	8-759-239-55	s	IC TC74HC123AF
IC402	8-759-948-40	s	IC DS1000M-50
IC403	8-759-948-40	s	IC DS1000M-50
IC404	8-759-971-71	s	IC CXD1312Q
IC405	8-759-243-09	s	IC TC74AC74F
IC409	8-759-099-78	s	IC CXD8338AQ
IC410	8-759-421-09	s	IC MN6557AS
IC412	8-759-098-17	s	IC LT1191CS8
IC413	8-752-015-81	s	IC CX20158
IC414	8-759-505-06	s	IC CXD8058Q
IC416	8-752-306-51	s	IC CX23065A
IC417	8-759-927-46	s	IC SN74HC00NS
IC418	8-752-332-67	s	IC CXD1217M
IC419	8-759-925-74	s	IC TC74HC04NS
L100	1-408-785-21	s	INDUCTOR CHIP 47UH
L200	1-408-777-00	s	INDUCTOR, CHIP 10uH
L201	1-410-312-11	s	INDUCTOR 0.22uH
L202	1-410-358-41	s	INDUCTOR 0.39uH
L400	1-408-777-00	s	INDUCTOR, CHIP 10uH
L401	1-408-797-11	s	INDUCTOR CHIP 470UH
L402	1-408-777-00	s	INDUCTOR, CHIP 10uH
L403	1-408-777-00	s	INDUCTOR, CHIP 10uH
L404	1-408-777-00	s	INDUCTOR, CHIP 10uH
L405	1-408-777-00	s	INDUCTOR, CHIP 10uH
L406	1-408-777-00	s	INDUCTOR, CHIP 10uH
Q100	8-729-175-72	s	TRANSISTOR 2SC2757-T33
Q101	8-729-112-65	s	TRANSISTOR 2SA1462-Y33
Q200	8-729-175-72	s	TRANSISTOR 2SC2757-T33
Q201	8-729-175-72	s	TRANSISTOR 2SC2757-T33
Q204	8-729-175-72	s	TRANSISTOR 2SC2757-T33
Q205	8-729-112-65	s	TRANSISTOR 2SA1462-Y33
Q206	8-729-112-65	s	TRANSISTOR 2SA1462-Y33
Q207	8-729-112-65	s	TRANSISTOR 2SA1462-Y33
Q208	8-729-112-65	s	TRANSISTOR 2SA1462-Y33
Q400	8-729-112-65	s	TRANSISTOR 2SA1462-Y33
Q401	8-729-175-72	s	TRANSISTOR 2SC2757-T33
Q402	8-729-175-72	s	TRANSISTOR 2SC2757-T33
R120	1-216-667-11	s	METAL, CHIP 4.7K 0.5% 1/10W
R123	1-216-634-11	s	METAL, CHIP 200 0.5% 1/10W
R251	1-216-663-11	s	METAL, CHIP 3.3K 0.5% 1/10W

NOTE: Please see page 9-1 for the parts that are not listed in the parts list.

(SD-30 BOARD)

Ref. No. or Q'ty	Part No.	SP	Description
R252	1-216-676-11	s	METAL, CHIP 11K 0.5% 1/10W
R253	1-216-686-11	s	METAL, CHIP 30K 0.5% 1/10W
R254	1-216-683-11	s	METAL, CHIP 22K 0.5% 1/10W
R256	1-216-631-11	s	METAL, CHIP 150 0.5% 1/10W
R257	1-216-631-11	s	METAL, CHIP 150 0.5% 1/10W
R258	1-216-631-11	s	METAL, CHIP 150 0.5% 1/10W
R262	1-216-623-11	s	METAL, CHIP 68 0.5% 1/10W
R263	1-216-623-11	s	METAL, CHIP 68 0.5% 1/10W
R264	1-216-623-11	s	METAL, CHIP 68 0.5% 1/10W
R321	1-216-643-11	s	METAL, CHIP 470 0.5% 1/10W
R326	1-216-668-11	s	METAL, CHIP 5.1K 0.5% 1/10W
R327	1-216-654-11	s	METAL, CHIP 1.3K 0.5% 1/10W
R328	1-218-776-11	s	METAL, CHIP 1M 0.5% 1/10W
R405	1-216-620-11	s	METAL, CHIP 51 0.5% 1/10W
R407	1-216-677-11	s	METAL, CHIP 12K 0.5% 1/10W
R412	1-216-647-11	s	METAL, CHIP 680 0.5% 1/10W
R413	1-216-647-11	s	METAL, CHIP 680 0.5% 1/10W
R414	1-216-687-11	s	METAL, CHIP 33K 0.5% 1/10W
R415	1-216-693-11	s	METAL, CHIP 56K 0.5% 1/10W
R430	1-216-647-11	s	METAL, CHIP 680 0.5% 1/10W
R431	1-216-631-11	s	METAL, CHIP 150 0.5% 1/10W
R432	1-216-631-11	s	METAL, CHIP 150 0.5% 1/10W
R433	1-216-668-11	s	METAL, CHIP 5.1K 0.5% 1/10W
R434	1-216-668-11	s	METAL, CHIP 5.1K 0.5% 1/10W
R435	1-216-668-11	s	METAL, CHIP 5.1K 0.5% 1/10W
R439	1-216-693-11	s	METAL, CHIP 56K 0.5% 1/10W
R440	1-216-693-11	s	METAL, CHIP 56K 0.5% 1/10W
R441	1-218-776-11	s	METAL, CHIP 1M 0.5% 1/10W
R442	1-216-640-11	s	METAL, CHIP 360 0.5% 1/10W
R443	1-216-655-11	s	METAL, CHIP 1.5K 0.5% 1/10W
R446	1-216-668-11	s	METAL, CHIP 5.1K 0.5% 1/10W
R462	1-216-653-11	s	METAL, CHIP 1.2K 0.5% 1/10W
R463	1-216-668-11	s	METAL, CHIP 5.1K 0.5% 1/10W
S1	1-571-146-11	s	SWITCH, ROTARY
S2	1-554-399-21	s	SWITCH, TOGGLE
S3	1-554-399-21	s	SWITCH, TOGGLE
S400	1-554-399-21	s	SWITCH, TOGGLE
VCO400	1-577-181-11	s	VCO, CRYSTAL 28.63636MHz
VCO401	1-577-089-11	s	VCO, CRYSTAL 14.318180MHz
VCO402	1-577-294-11	s	VCO, CRYSTAL 14.187500MHz
X300	1-567-927-11	s	RESONATOR, CERAMIC 16.00MHz

SD-31 BOARD

Ref. No. or Q'ty	Part No.	SP	Description
1pc	9-911-849-XX	o	CUSHION
C26	1-163-263-11	s	CERAMIC, CHIP 330PF 5% 50V
C27	1-163-121-00	s	CERAMIC, CHIP 150PF 5% 50V
CNA1	1-750-074-11	o	PIN, SIL 10P
CNB1	1-750-074-11	o	PIN, SIL 10P
CNC1	1-750-074-11	o	PIN, SIL 10P
CND1	1-750-074-11	o	PIN, SIL 10P
CNE1	1-750-074-11	o	PIN, SIL 10P
IC1	8-759-926-82	s	IC SN74HC574ANS
IC2	8-759-926-82	s	IC SN74HC574ANS
IC3	8-759-099-78	s	IC CXD8338AQ
IC4	8-752-202-90	s	IC CX22029
IC5	8-759-057-32	s	IC CAT35C104K
IC6	8-741-601-02	s	IC SBX1601A
L1	1-412-026-11	s	INDUCTOR, CHIP 1uH
L2	1-412-026-11	s	INDUCTOR, CHIP 1uH
L3	1-410-358-41	s	INDUCTOR 0.39uH
L4	1-410-312-11	s	INDUCTOR 0.22uH
Q1	8-729-601-58	s	TRANSISTOR 2SC3053-C
Q2	8-729-216-22	s	TRANSISTOR 2SA1162
Q3	8-729-143-46	s	TRANSISTOR 2SC3356-R24
Q4	8-729-143-46	s	TRANSISTOR 2SC3356-R24
Q5	8-729-143-46	s	TRANSISTOR 2SC3356-R24
Q6	8-729-143-46	s	TRANSISTOR 2SC3356-R24
Q7	8-729-143-46	s	TRANSISTOR 2SC3356-R24
Q8	8-729-143-46	s	TRANSISTOR 2SC3356-R24
Q9	8-729-143-46	s	TRANSISTOR 2SC3356-R24
R1	1-216-629-11	s	METAL, CHIP 120 0.5% 1/10W
R2	1-216-629-11	s	METAL, CHIP 120 0.5% 1/10W
R4	1-216-647-11	s	METAL, CHIP 680 0.5% 1/10W
R9	1-216-674-11	s	METAL, CHIP 9.1K 0.5% 1/10W
R11	1-216-647-11	s	METAL, CHIP 680 0.5% 1/10W
R12	1-216-644-11	s	METAL, CHIP 510 0.5% 1/10W
R13	1-216-683-11	s	METAL, CHIP 22K 0.5% 1/10W
R14	1-216-686-11	s	METAL, CHIP 30K 0.5% 1/10W
R17	1-216-615-11	s	METAL, CHIP 33 0.5% 1/10W
R18	1-216-615-11	s	METAL, CHIP 33 0.5% 1/10W
R19	1-216-615-11	s	METAL, CHIP 33 0.5% 1/10W
R20	1-216-615-11	s	METAL, CHIP 33 0.5% 1/10W
R21	1-216-625-11	s	METAL, CHIP 82 0.5% 1/10W
R22	1-216-625-11	s	METAL, CHIP 82 0.5% 1/10W
R33	1-216-630-11	s	METAL, CHIP 130 0.5% 1/10W
R34	1-216-630-11	s	METAL, CHIP 130 0.5% 1/10W

SG-210 BOARD

Ref. No. or Q'ty	Part No.	SP	Description
1pc	A-8271-815-A	o	MOUNTED CIRCUIT BOARD, SG-210
2pcs	3-166-185-01	s	NUT, PLATE
6pcs	7-622-207-05	s	N 2.6, TYPE 2
10pcs	7-628-254-40	s	SCREW +PS 2.6X12
C104	1-164-232-11	s	CERAMIC 0.01uF 10% 100V
C105	1-164-232-11	s	CERAMIC 0.01uF 10% 100V
C106	1-164-232-11	s	CERAMIC 0.01uF 10% 100V
C107	1-164-232-11	s	CERAMIC 0.01uF 10% 100V
C108	1-164-232-11	s	CERAMIC 0.01uF 10% 100V
C111	1-163-275-11	s	CERAMIC, CHIP 0.001uF 5% 50V
C112	1-163-275-11	s	CERAMIC, CHIP 0.001uF 5% 50V
C119	1-163-239-11	s	CERAMIC, CHIP 33PF 5% 50V
C120	1-163-239-11	s	CERAMIC, CHIP 33PF 5% 50V
C200	1-124-287-00	s	ELECT 10uF 20% 10V
C205	1-163-121-00	s	CERAMIC, CHIP 150PF 5% 50V
C209	1-163-125-00	s	CERAMIC, CHIP 220PF 5% 50V
C212	1-163-121-00	s	CERAMIC, CHIP 150PF 5% 50V
C301	1-163-243-11	s	CERAMIC, CHIP 47PF 5% 50V
C307	1-163-275-11	s	CERAMIC, CHIP 0.001uF 5% 50V
C308	1-135-091-00	s	TANTALUM, CHIP 1uF 10% 16V
CNO1	1-750-065-11	o	CONNECTOR, BB 60P, FEMALE
CNO2	1-750-065-11	o	CONNECTOR, BB 60P, FEMALE
CNX1	1-565-207-21	s	CONNECTOR, DIN 128P, MALE
CNX2	1-563-341-11	o	CONNECTOR, DIN 96P, FEMALE
CNY1	1-565-207-21	s	CONNECTOR, DIN 128P, MALE
CNY2	1-563-341-11	o	CONNECTOR, DIN 96P, FEMALE
CNZ1	1-506-748-11	o	CONNECTOR, DIN 96P, MALE
D1	8-719-800-76	s	DIODE 1SS226
D2	8-719-800-76	s	DIODE 1SS226
D200	8-719-800-76	s	DIODE 1SS226
D201	8-719-800-76	s	DIODE 1SS226
F1	⚠1-576-031-11	s	FUSE 10A 125V
F2	⚠1-576-031-11	s	FUSE 10A 125V
IC100	8-759-945-30	s	IC SN75ALS194N
IC101	8-759-505-27	s	IC SN75ALS195J
IC102	8-759-234-77	s	IC TC4S66F
IC103	8-759-057-32	s	IC CAT35C104K
IC104	8-759-947-47	s	IC SN74LS594N
IC105	8-759-505-00	s	IC CXD8052Q
IC106	8-759-244-71	s	IC TC74AC540F
IC107	8-759-233-44	s	IC TC74HC595AF
IC108	8-759-244-75	s	IC TC74AC541F
IC109	8-759-927-46	s	IC SN74HC00NS
IC110	8-759-239-55	s	IC TC74HC123AF
IC111	8-759-926-42	s	IC SN74HC238NS
IC112	8-759-076-03	s	IC MB88346BPF
IC113	8-759-013-95	s	IC MC74HC589F
IC200	8-752-015-81	s	IC CX20158
IC201	8-759-987-27	s	IC LM1881M
IC202	8-759-996-34	s	IC LM360M
IC203	8-759-230-99	s	IC TC74HC4053AF
IC204	8-759-908-92	s	IC TL084CNS
IC205	8-759-996-34	s	IC LM360M
IC206	8-759-506-92	s	IC LT1009CZ
IC300	8-759-948-40	s	IC DS1000M-50

NOTE: Please see page 9-1 for the parts that are not listed in the parts list.

(SG-210 BOARD)

Ref. No. or Q'ty	Part No.	SP	Description
IC301	8-759-239-55	s	IC TC74HC123AF
IC302	8-759-948-40	s	IC DS1000M-50
IC303	8-759-971-71	s	IC CXD1312Q
IC304	8-759-243-09	s	IC TC74AC74F
IC305	8-759-244-15	s	IC TC74AC240F
IC306	8-759-244-15	s	IC TC74AC240F
IC308	8-759-244-15	s	IC TC74AC240F
IC309	8-759-244-15	s	IC TC74AC240F
IC400	8-759-505-06	s	IC CXD8058Q
IC401	8-759-505-06	s	IC CXD8058Q
IC402	8-759-505-06	s	IC CXD8058Q
IC403	8-759-505-06	s	IC CXD8058Q
IC404	8-759-505-06	s	IC CXD8058Q
IC405	8-759-505-06	s	IC CXD8058Q
IC406	8-759-505-06	s	IC CXD8058Q
IC407	8-759-243-50	s	IC TC74AC08F
IC408	8-759-243-62	s	IC TC74AC32F
IC410	8-759-244-04	s	IC TC74AC163F
IC411	8-759-243-70	s	IC TC74AC109F
IC412	8-759-244-85	s	IC TC74AC574F
IC413	8-759-244-85	s	IC TC74AC574F
IC414	8-759-505-06	s	IC CXD8058Q
IC700	8-759-244-85	s	IC TC74AC574F
IC701	8-759-244-85	s	IC TC74AC574F
IC702	8-759-244-85	s	IC TC74AC574F
IC703	8-759-244-85	s	IC TC74AC574F
L200	1-408-785-21	s	INDUCTOR CHIP 47UH
L201	1-408-785-21	s	INDUCTOR CHIP 47UH
L202	1-408-777-00	s	INDUCTOR, CHIP 10uH
Q200	8-729-175-72	s	TRANSISTOR 2SC2757-T33
Q201	8-729-175-72	s	TRANSISTOR 2SC2757-T33
R107	1-216-695-11	s	METAL, CHIP 68K 0.5% 1/10W
R120	1-216-695-11	s	METAL, CHIP 68K 0.5% 1/10W
R202	1-216-667-11	s	METAL, CHIP 4.7K 0.5% 1/10W
R203	1-216-661-11	s	METAL, CHIP 2.7K 0.5% 1/10W
R204	1-216-667-11	s	METAL, CHIP 4.7K 0.5% 1/10W
R206	1-216-667-11	s	METAL, CHIP 4.7K 0.5% 1/10W
R210	1-218-772-11	s	METAL 680K 0.5% 1/10W
R211	1-216-634-11	s	METAL, CHIP 200 0.5% 1/10W
R212	1-218-776-11	s	METAL, CHIP 1M 0.5% 1/10W
R213	1-218-776-11	s	METAL, CHIP 1M 0.5% 1/10W
R220	1-216-620-11	s	METAL, CHIP 51 0.5% 1/10W
R230	1-216-643-11	s	METAL, CHIP 470 0.5% 1/10W
R232	1-216-668-11	s	METAL, CHIP 5.1K 0.5% 1/10W
R301	1-216-677-11	s	METAL, CHIP 12K 0.5% 1/10W
R307	1-216-647-11	s	METAL, CHIP 680 0.5% 1/10W
R308	1-216-647-11	s	METAL, CHIP 680 0.5% 1/10W
R309	1-216-687-11	s	METAL, CHIP 33K 0.5% 1/10W
R310	1-216-693-11	s	METAL, CHIP 56K 0.5% 1/10W
TH1	1-809-179-11	s	THERMISTOR 1k 102AT-2
VCO1	1-577-181-11	s	VCO, CRYSTAL 28.63636MHz

NOTE: Please see page 9-1 for the parts that are not listed in the parts list.

SG-211 BOARD

Ref. No. or Q'ty	Part No.	SP	Description
1pc	A-8271-892-A	o	MOUNTED CIRCUIT BOARD, SG-211
2pcs	3-166-185-01	s	NUT, PLATE
10pcs	7-621-259-75	s	SCREW +P 2.6X12
6pcs	7-622-207-05	s	N 2.6, TYPE 2
6pcs	7-682-903-01	s	SCREW +PWH 3X5
11pcs	7-682-948-01	s	SCREW +PSW 3X8
C104	1-164-232-11	s	CERAMIC 0.01uF 10% 100V
C105	1-164-232-11	s	CERAMIC 0.01uF 10% 100V
C106	1-164-232-11	s	CERAMIC 0.01uF 10% 100V
C107	1-164-232-11	s	CERAMIC 0.01uF 10% 100V
C108	1-164-232-11	s	CERAMIC 0.01uF 10% 100V
C111	1-163-275-11	s	CERAMIC, CHIP 0.001uF 5% 50V
C112	1-163-275-11	s	CERAMIC, CHIP 0.001uF 5% 50V
C119	1-163-239-11	s	CERAMIC, CHIP 33PF 5% 50V
C120	1-163-239-11	s	CERAMIC, CHIP 33PF 5% 50V
C200	1-124-287-00	s	ELECT 10uF 20% 10V
C205	1-163-121-00	s	CERAMIC, CHIP 150PF 5% 50V
C212	1-163-121-00	s	CERAMIC, CHIP 150PF 5% 50V
C222	1-163-237-11	s	CERAMIC, CHIP 27PF 5% 50V
C223	1-163-237-11	s	CERAMIC, CHIP 27PF 5% 50V
C224	1-163-237-11	s	CERAMIC, CHIP 27PF 5% 50V
C225	1-163-237-11	s	CERAMIC, CHIP 27PF 5% 50V
C228	1-163-135-00	s	CERAMIC, CHIP 560PF 5% 50V
C230	1-163-237-11	s	CERAMIC, CHIP 27PF 5% 50V
C232	1-163-251-11	s	CERAMIC, CHIP 100PF 5% 50V
C234	1-163-251-11	s	CERAMIC, CHIP 100PF 5% 50V
C315	1-163-275-11	s	CERAMIC, CHIP 0.001uF 5% 50V
C316	1-135-091-00	s	TANTALUM, CHIP 1uF 10% 16V
CN01	1-750-065-11	o	CONNECTOR, BOARD TO BOARD 60P
CN02	1-750-065-11	o	CONNECTOR, BOARD TO BOARD 60P
CNX1	1-565-207-21	s	CONNECTOR, DIN 128P, MALE
CNX2	1-563-341-11	o	CONNECTOR, DIN 96P, FEMALE
CNY1	1-565-207-21	s	CONNECTOR, DIN 128P, MALE
CNY2	1-563-341-11	o	CONNECTOR, DIN 96P, FEMALE
CNZ1	1-506-748-11	o	CONNECTOR, DIN 96P, MALE
D1	8-719-800-76	s	DIODE 1SS226
D2	8-719-800-76	s	DIODE 1SS226
D200	8-719-800-76	s	DIODE 1SS226
F1	⚠1-576-031-11	s	FUSE 10A 125V
F2	⚠1-576-031-11	s	FUSE 10A 125V
IC100	8-759-945-30	s	IC SN75ALS194N
IC101	8-759-505-27	s	IC SN75ALS195J
IC102	8-759-234-77	s	IC TC4S66F
IC103	8-759-057-32	s	IC CAT35C104K
IC104	8-759-947-47	s	IC SN74LS594N
IC105	8-759-505-00	s	IC CXD8052Q
IC106	8-759-244-71	s	IC TC74AC540F
IC107	8-759-233-44	s	IC TC74HC595AF
IC108	8-759-244-75	s	IC TC74AC541F
IC109	8-759-927-46	s	IC SN74HC00NS
IC110	8-759-239-55	s	IC TC74HC123AF
IC111	8-759-926-42	s	IC SN74HC238NS
IC112	8-759-013-95	s	IC MC74HC589F
IC200	8-752-015-81	s	IC CX20158
IC201	8-759-987-27	s	IC LM1881M

(SG-211 BOARD)

Ref. No. or Q'ty	Part No.	SP	Description
IC203	8-759-230-99	s	IC TC74HC4053AF
IC204	8-759-908-92	s	IC TL084CNS
IC205	8-759-996-34	s	IC LM360M
IC206	8-759-239-58	s	IC TC74HC221AF
IC207	8-759-239-58	s	IC TC74HC221AF
IC208	8-759-239-58	s	IC TC74HC221AF
IC301	8-759-239-55	s	IC TC74HC123AF
IC303	8-752-306-51	s	IC CX23065A
IC304	8-759-243-09	s	IC TC74AC74F
IC305	8-759-244-15	s	IC TC74AC240F
IC306	8-759-244-15	s	IC TC74AC240F
IC307	8-759-244-15	s	IC TC74AC240F
IC308	8-759-244-15	s	IC TC74AC240F
IC309	8-759-244-15	s	IC TC74AC240F
IC400	8-759-505-06	s	IC CXD8058Q
IC401	8-759-505-06	s	IC CXD8058Q
IC402	8-759-505-06	s	IC CXD8058Q
IC403	8-759-505-06	s	IC CXD8058Q
IC404	8-759-505-06	s	IC CXD8058Q
IC405	8-759-505-06	s	IC CXD8058Q
IC406	8-759-505-06	s	IC CXD8058Q
IC407	8-759-243-50	s	IC TC74AC08F
IC408	8-759-243-62	s	IC TC74AC32F
IC412	8-759-244-85	s	IC TC74AC574F
IC413	8-759-244-85	s	IC TC74AC574F
IC700	8-759-244-85	s	IC TC74AC574F
IC701	8-759-244-85	s	IC TC74AC574F
IC702	8-759-244-85	s	IC TC74AC574F
L200	1-408-785-21	s	INDUCTOR, CHIP 47UH
L201	1-408-785-21	s	INDUCTOR, CHIP 47UH
L202	1-408-777-00	s	INDUCTOR, CHIP 10uH
Q200	8-729-175-72	s	TRANSISTOR 2SC2757-T33
Q201	8-729-175-72	s	TRANSISTOR 2SC2757-T33
R107	1-216-695-11	s	METAL, CHIP 68K 0.5% 1/10W
R120	1-216-695-11	s	METAL, CHIP 68K 0.5% 1/10W
R202	1-216-667-11	s	METAL, CHIP 4.7K 0.5% 1/10W
R203	1-216-661-11	s	METAL, CHIP 2.7K 0.5% 1/10W
R204	1-216-667-11	s	METAL, CHIP 4.7K 0.5% 1/10W
R206	1-216-667-11	s	METAL, CHIP 4.7K 0.5% 1/10W
R210	1-218-772-11	s	METAL 680K 0.5% 1/10W
R212	1-218-776-11	s	METAL 1M 0.5% 1/10W
R213	1-218-776-11	s	METAL 1M 0.5% 1/10W
R222	1-216-637-11	s	METAL, CHIP 270 0.5% 1/10W
R226	1-216-685-11	s	METAL, CHIP 27K 0.5% 1/10W
R228	1-216-685-11	s	METAL, CHIP 27K 0.5% 1/10W
R229	1-216-685-11	s	METAL, CHIP 27K 0.5% 1/10W
R231	1-216-685-11	s	METAL, CHIP 27K 0.5% 1/10W
R232	1-216-695-11	s	METAL, CHIP 68K 0.5% 1/10W
R233	1-216-685-11	s	METAL, CHIP 27K 0.5% 1/10W
R301	1-216-677-11	s	METAL, CHIP 12K 0.5% 1/10W
R310	1-216-693-11	s	METAL, CHIP 56K 0.5% 1/10W
TH1	1-809-179-11	s	THERMISTOR 1k 102AT-2
VCO1	1-577-597-11	s	VCO, CRYSTAL 27.00000MHz

NOTE: Please see page 9-1 for the parts that are not listed in the parts list.

WKG-10 BOARD

Ref. No. or Q'ty	Part No.	SP	Description
1pc	A-8271-806-A	o	MOUNTED CIRCUIT BOARD, WKG-10
1pc	3-166-184-01	o	LEVER, PC BOARD
2pcs	3-166-185-01	s	NUT, PLATE
1pc	3-179-150-01	o	BRACKET, EXTENSION
2pcs	7-622-207-05	s	N 2.6, TYPE 2
1pc	7-626-320-11	s	PIN, SPRING 3X8
6pcs	7-628-254-40	s	SCREW +PS 2.6X12
3pcs	7-682-903-01	s	SCREW +PWH 3X5
8pcs	7-682-948-01	s	SCREW +PSW 3X8
8pcs	7-685-104-19	s	SCREW +P 2X6 TYPE2 SLIT
C56	1-163-251-11	s	CERAMIC, CHIP 100PF 5% 50V
CN101	1-695-640-31	s	CONNECTOR, FPC 13P
CN102	1-695-640-31	s	CONNECTOR, FPC 13P
CN103	1-695-640-31	s	CONNECTOR, FPC 13P
CN201	1-695-640-31	s	CONNECTOR, FPC 13P
CN202	1-695-640-31	s	CONNECTOR, FPC 13P
CN203	1-695-640-31	s	CONNECTOR, FPC 13P
CNA2	1-750-066-11	o	CONNECTOR, BB 50P, FEMALE
CNB2	1-750-066-11	o	CONNECTOR, BB 50P, FEMALE
CNC2	1-750-066-11	o	CONNECTOR, BB 50P, FEMALE
CND2	1-750-066-11	o	CONNECTOR, BB 50P, FEMALE
CNI101	1-526-816-21	o	SOCKET, IC (DP) 24P
CNI102	1-526-816-21	o	SOCKET, IC (DP) 24P
CNI201	1-526-816-21	o	SOCKET, IC (DP) 24P
CNI202	1-526-816-21	o	SOCKET, IC (DP) 24P
CNX1	1-565-207-21	s	CONNECTOR, DIN 128P, MALE
CNY1	1-565-207-21	s	CONNECTOR, DIN 128P, MALE
CNZ1	1-506-748-11	o	CONNECTOR, DIN 96P, MALE
D1	8-719-800-76	s	DIODE 1SS226
F1	⚠1-576-031-11	s	FUSE 10A 125V
IC1	8-759-505-00	s	IC CXD8052Q
IC2	8-759-505-27	s	IC SN75ALS195J
IC3	8-759-945-30	s	IC SN75ALS194N
IC4	8-759-057-32	s	IC CAT35C104K
IC5	8-759-234-77	s	IC TC4S66F
IC6	8-759-244-75	s	IC TC74AC541F
IC7	8-759-926-82	s	IC SN74HC574ANS
IC8	8-759-244-71	s	IC TC74AC540F
IC9	8-759-244-71	s	IC TC74AC540F
IC10	8-759-244-77	s	IC TC74ACT541F
IC11	8-759-244-75	s	IC TC74AC541F
IC12	8-759-925-74	s	IC TC74HC04NS
IC13	8-759-505-06	s	IC CXD8058Q
IC14	8-759-505-06	s	IC CXD8058Q
IC15	8-759-925-74	s	IC TC74HC04NS
IC16	8-759-244-71	s	IC TC74AC540F
IC17	8-759-239-23	s	IC TC74HC86AF
IC18	8-759-927-46	s	IC SN74HC00NS
IC19	8-759-925-90	s	IC SN74HC74NS
IC101	8-759-704-27	s	IC WS57C45-SIN1-V1.0, EPROM
IC102	8-759-704-28	s	IC WS57C45-SIN2-V1.0, EPROM

(WKG-10 BOARD)

Ref. No. or Q'ty	Part No.	SP	Description
IC103	8-759-504-91	s	IC CXD8062Q
IC104	8-759-505-02	s	IC CXD8053Q
IC105	8-759-505-07	s	IC CXD8059
IC106	8-759-505-07	s	IC CXD8059
IC107	8-759-504-90	s	IC CXD8063Q
IC108	8-759-504-90	s	IC CXD8063Q
IC109	8-759-504-97	s	IC CXD8190Q
IC110	8-759-504-90	s	IC CXD8063Q
IC111	8-759-504-90	s	IC CXD8063Q
IC112	8-759-504-91	s	IC CXD8062Q
IC113	8-759-505-08	s	IC CXD8060Q
IC114	8-759-244-85	s	IC TC74AC574F
IC115	8-759-244-85	s	IC TC74AC574F
IC116	8-759-505-09	s	IC CXD8061
IC117	8-759-926-82	s	IC SN74HC574ANS
IC118	8-759-926-82	s	IC SN74HC574ANS
IC119	8-759-926-82	s	IC SN74HC574ANS
IC120	8-759-926-82	s	IC SN74HC574ANS
IC121	8-759-244-81	s	IC TC74AC564F
IC122	8-759-244-81	s	IC TC74AC564F
IC123	8-759-926-82	s	IC SN74HC574ANS
IC124	8-759-926-82	s	IC SN74HC574ANS
IC201	8-759-704-27	s	IC WS57C45-SIN1-V1.0, EPROM
IC202	8-759-704-28	s	IC WS57C45-SIN2-V1.0, EPROM
IC203	8-759-504-91	s	IC CXD8062Q
IC204	8-759-505-02	s	IC CXD8053Q
IC205	8-759-505-07	s	IC CXD8059
IC206	8-759-505-07	s	IC CXD8059
IC207	8-759-504-90	s	IC CXD8063Q
IC208	8-759-504-90	s	IC CXD8063Q
IC209	8-759-504-97	s	IC CXD8190Q
IC210	8-759-504-90	s	IC CXD8063Q
IC211	8-759-504-90	s	IC CXD8063Q
IC212	8-759-504-91	s	IC CXD8062Q
IC213	8-759-505-08	s	IC CXD8060Q
IC214	8-759-244-85	s	IC TC74AC574F
IC215	8-759-244-85	s	IC TC74AC574F
IC216	8-759-505-09	s	IC CXD8061
IC217	8-759-926-82	s	IC SN74HC574ANS
IC218	8-759-926-82	s	IC SN74HC574ANS
IC219	8-759-926-82	s	IC SN74HC574ANS
IC220	8-759-926-82	s	IC SN74HC574ANS
IC221	8-759-244-81	s	IC TC74AC564F
IC222	8-759-244-81	s	IC TC74AC564F
IC223	8-759-926-82	s	IC SN74HC574ANS
IC224	8-759-926-82	s	IC SN74HC574ANS
TH1	1-809-179-11	s	THERMISTOR 1k 102AT-2

NOTE: Please see page 9-1 for the parts that are not listed in the parts list.

WP-37 BOARD

Ref. No. or Q'ty	Part No.	SP	Description
16pcs	1-526-653-21	s	SOCKET, IC (DP) 14P
2pcs	3-166-184-01	o	LEVER, PC BOARD
1pc	3-179-230-01	o	JOINT
2pcs	7-626-320-11	s	PIN, SPRING 3X8
3pcs	7-682-903-01	s	SCREW +PWH 3X5
8pcs	7-685-104-19	s	SCREW +P 2X6 TYPE2 SLIT
CNA1	1-750-250-11	o	CONNECTOR, BB 50P, MALE
CNB1	1-750-250-11	o	CONNECTOR, BB 50P, MALE
CNC1	1-750-250-11	o	CONNECTOR, BB 50P, MALE
CND1	1-750-250-11	o	CONNECTOR, BB 50P, MALE
CNI417	1-526-660-21	o	SOCKET, IC 32P
CNI418	1-526-660-21	o	SOCKET, IC 32P
IC101	8-759-505-00	s	IC CXD8052Q
IC102	8-759-057-32	s	IC CAT35C104K
IC103	8-759-505-06	s	IC CXD8058Q
IC104	8-759-505-06	s	IC CXD8058Q
IC105	8-759-244-75	s	IC TC74AC541F
IC106	8-759-244-71	s	IC TC74AC540F
IC107	8-759-925-74	s	IC TC74HC04NS
IC108	8-759-927-46	s	IC SN74HC00NS
IC109	8-759-926-82	s	IC SN74HC574ANS
IC201	8-759-926-23	s	IC SN74HC163NS
IC202	8-759-926-23	s	IC SN74HC163NS
IC203	8-759-925-72	s	IC SN74HC02NS
IC204	8-759-925-74	s	IC TC74HC04NS
IC205	8-759-926-23	s	IC SN74HC163NS
IC206	8-759-926-23	s	IC SN74HC163NS
IC207	8-759-926-23	s	IC SN74HC163NS
IC208	8-759-926-23	s	IC SN74HC163NS
IC209	8-759-926-18	s	IC SN74HC157ANS
IC210	8-759-926-18	s	IC SN74HC157ANS
IC211	8-759-925-90	s	IC SN74HC74NS
IC212	8-759-925-72	s	IC SN74HC02NS
IC213	8-759-242-51	s	IC TC74AC86F
IC214	8-759-242-51	s	IC TC74AC86F
IC215	8-759-242-51	s	IC TC74AC86F
IC216	8-759-925-99	s	IC SN74HC109NS
IC219	8-759-927-23	s	IC SN74HCT574NS
IC220	8-759-927-23	s	IC SN74HCT574NS
IC221	8-759-926-82	s	IC SN74HC574ANS
IC222	8-759-926-82	s	IC SN74HC574ANS
IC223	8-759-927-23	s	IC SN74HCT574NS
IC224	8-759-927-23	s	IC SN74HCT574NS
IC301	8-759-926-24	s	IC SN74HC164NS
IC302	8-759-926-24	s	IC SN74HC164NS
IC303	8-759-926-24	s	IC SN74HC164NS
IC304	8-759-926-24	s	IC SN74HC164NS
IC305	8-759-242-51	s	IC TC74AC86F
IC306	8-759-519-26	s	IC MSM514221A-4RS
IC307	8-759-519-26	s	IC MSM514221A-4RS
IC308	8-759-519-26	s	IC MSM514221A-4RS
IC309	8-759-926-82	s	IC SN74HC574ANS
IC310	8-759-504-91	s	IC CXD8062Q
IC311	8-759-504-91	s	IC CXD8062Q
IC312	8-759-504-91	s	IC CXD8062Q

(WP-37 BOARD)

Ref. No. or Q'ty	Part No.	SP	Description
IC313	8-759-323-08	s	IC HM63021FP-28
IC314	8-759-323-08	s	IC HM63021FP-28
IC315	8-759-926-82	s	IC SN74HC574ANS
IC316	8-759-504-90	s	IC CXD8063Q
IC317	8-759-927-23	s	IC SN74HCT574NS
IC318	8-759-927-23	s	IC SN74HCT574NS
IC319	8-759-927-23	s	IC SN74HCT574NS
IC320	8-759-927-23	s	IC SN74HCT574NS
IC401	8-759-926-82	s	IC SN74HC574ANS
IC402	8-759-926-82	s	IC SN74HC574ANS
IC403	8-759-926-82	s	IC SN74HC574ANS
IC404	8-759-926-82	s	IC SN74HC574ANS
IC405	8-759-504-91	s	IC CXD8062Q
IC406	8-759-504-91	s	IC CXD8062Q
IC407	8-759-927-23	s	IC SN74HCT574NS
IC408	8-759-927-23	s	IC SN74HCT574NS
IC409	8-759-927-23	s	IC SN74HCT574NS
IC410	8-759-927-23	s	IC SN74HCT574NS
IC417	8-759-551-75	s	IC WS27C010L-UMSC-V1.1, EPROM
IC418	8-759-551-76	s	IC WS27C010L-LMSC-V1.1, EPROM
IC505	8-759-927-23	s	IC SN74HCT574NS
IC506	8-759-927-23	s	IC SN74HCT574NS
IC511	8-759-927-23	s	IC SN74HCT574NS
IC512	8-759-927-23	s	IC SN74HCT574NS

NOTE: Please see page 9-1 for the parts that are not listed in the parts list.

XPT-3 BOARD

Ref. No. or Q'ty	Part No.	SP	Description
2pcs	3-166-184-01	o	LEVER, PC BOARD
2pcs	3-166-185-01	s	NUT, PLATE
2pcs	7-622-207-05	s	N 2.6, TYPE 2
2pcs	7-626-320-11	s	PIN, SPRING 3X8
6pcs	7-628-254-40	s	SCREW +PS 2.6X12
8pcs	7-682-948-01	s	SCREW +PSW 3X8
C60	1-163-251-11	s	CERAMIC, CHIP 100PF 5% 50V
C61	1-163-251-11	s	CERAMIC, CHIP 100PF 5% 50V
C111	1-164-161-11	s	CERAMIC, CHIP 0.0022uF 10% 100V
C113	1-163-243-11	s	CERAMIC, CHIP 47PF 5% 50V
C211	1-164-161-11	s	CERAMIC, CHIP 0.0022uF 10% 100V
C213	1-163-243-11	s	CERAMIC, CHIP 47PF 5% 50V
C311	1-164-161-11	s	CERAMIC, CHIP 0.0022uF 10% 100V
C313	1-163-243-11	s	CERAMIC, CHIP 47PF 5% 50V
C411	1-164-161-11	s	CERAMIC, CHIP 0.0022uF 10% 100V
C413	1-163-243-11	s	CERAMIC, CHIP 47PF 5% 50V
C511	1-164-161-11	s	CERAMIC, CHIP 0.0022uF 10% 100V
C513	1-163-243-11	s	CERAMIC, CHIP 47PF 5% 50V
C611	1-164-161-11	s	CERAMIC, CHIP 0.0022uF 10% 100V
C613	1-163-243-11	s	CERAMIC, CHIP 47PF 5% 50V
C711	1-164-161-11	s	CERAMIC, CHIP 0.0022uF 10% 100V
C713	1-163-243-11	s	CERAMIC, CHIP 47PF 5% 50V
C811	1-164-161-11	s	CERAMIC, CHIP 0.0022uF 10% 100V
C813	1-163-243-11	s	CERAMIC, CHIP 47PF 5% 50V
CN101	1-569-170-11	o	CONNECTOR, COAXIAL, MALE
CN201	1-569-170-11	o	CONNECTOR, COAXIAL, MALE
CN301	1-569-170-11	o	CONNECTOR, COAXIAL, MALE
CN401	1-569-170-11	o	CONNECTOR, COAXIAL, MALE
CN501	1-569-170-11	o	CONNECTOR, COAXIAL, MALE
CN601	1-569-170-11	o	CONNECTOR, COAXIAL, MALE
CN701	1-569-170-11	o	CONNECTOR, COAXIAL, MALE
CN801	1-569-170-11	o	CONNECTOR, COAXIAL, MALE
CNX1	1-565-207-21	s	CONNECTOR, DIN 128P, MALE
CNY1	1-565-207-21	s	CONNECTOR, DIN 128P, MALE
CNZ1	1-506-748-11	o	CONNECTOR, DIN 96P, MALE
D12	8-719-800-76	s	DIODE 1SS226
D13	8-719-800-76	s	DIODE 1SS226
D101	8-719-800-76	s	DIODE 1SS226
D102	8-719-800-76	s	DIODE 1SS226
D201	8-719-800-76	s	DIODE 1SS226
D202	8-719-800-76	s	DIODE 1SS226
D301	8-719-800-76	s	DIODE 1SS226
D302	8-719-800-76	s	DIODE 1SS226
D401	8-719-800-76	s	DIODE 1SS226
D402	8-719-800-76	s	DIODE 1SS226
D501	8-719-800-76	s	DIODE 1SS226
D502	8-719-800-76	s	DIODE 1SS226
D601	8-719-800-76	s	DIODE 1SS226
D602	8-719-800-76	s	DIODE 1SS226
D701	8-719-800-76	s	DIODE 1SS226
D702	8-719-800-76	s	DIODE 1SS226
D801	8-719-800-76	s	DIODE 1SS226
D802	8-719-800-76	s	DIODE 1SS226
F1	⚠1-576-031-11	s	FUSE 10A 125V
F2	⚠1-576-031-11	s	FUSE 10A 125V

(XPT-3 BOARD)

Ref. No. or Q'ty	Part No.	SP	Description
FB902	1-535-178-00	s	BEAD, FERRITE
FB903	1-535-178-00	s	BEAD, FERRITE
FB904	1-535-178-00	s	BEAD, FERRITE
FB905	1-535-178-00	s	BEAD, FERRITE
FB906	1-535-178-00	s	BEAD, FERRITE
FB907	1-535-178-00	s	BEAD, FERRITE
IC10	8-759-505-27	s	IC SN75ALS195J
IC11	8-759-945-30	s	IC SN75ALS194N
IC12	8-759-505-00	s	IC CXD8052Q
IC20	8-759-244-71	s	IC TC74AC540F
IC21	8-759-244-71	s	IC TC74AC540F
IC22	8-759-244-75	s	IC TC74AC541F
IC23	8-759-244-85	s	IC TC74AC574F
IC24	8-759-505-06	s	IC CXD8058Q
IC25	8-759-505-06	s	IC CXD8058Q
IC26	8-759-505-06	s	IC CXD8058Q
IC27	8-759-234-77	s	IC TC4S66F
IC31	8-759-032-59	s	IC MC74HC595AF
IC32	8-759-057-32	s	IC CAT35C104K
IC33	8-759-926-50	s	IC SN74HC251ANS
IC35	8-759-076-03	s	IC MB88346BPF
IC36	8-759-243-06	s	IC TC74AC04F
IC37	8-759-505-00	s	IC CXD8052Q
IC101	8-741-602-11	s	IC SBX1602A
IC102	8-759-948-53	s	IC MB766P
IC104	8-759-001-25	s	IC MC10125L
IC105	8-759-071-82	s	IC CXD8364Q
IC106	8-759-320-87	s	IC HM63021P-28
IC107	8-759-320-87	s	IC HM63021P-28
IC109	8-759-035-93	s	IC TC7S32F-TE85L
IC110	8-759-035-93	s	IC TC7S32F-TE85L
IC201	8-741-602-11	s	IC SBX1602A
IC202	8-759-948-53	s	IC MB766P
IC204	8-759-001-25	s	IC MC10125L
IC205	8-759-071-82	s	IC CXD8364Q
IC206	8-759-320-87	s	IC HM63021P-28
IC207	8-759-320-87	s	IC HM63021P-28
IC209	8-759-035-93	s	IC TC7S32F-TE85L
IC210	8-759-035-93	s	IC TC7S32F-TE85L
IC301	8-741-602-11	s	IC SBX1602A
IC302	8-759-948-53	s	IC MB766P
IC304	8-759-001-25	s	IC MC10125L
IC305	8-759-071-82	s	IC CXD8364Q
IC306	8-759-320-87	s	IC HM63021P-28
IC307	8-759-320-87	s	IC HM63021P-28
IC309	8-759-035-93	s	IC TC7S32F-TE85L
IC310	8-759-035-93	s	IC TC7S32F-TE85L
IC401	8-741-602-11	s	IC SBX1602A
IC402	8-759-948-53	s	IC MB766P
IC404	8-759-001-25	s	IC MC10125L
IC405	8-759-071-82	s	IC CXD8364Q
IC406	8-759-320-87	s	IC HM63021P-28
IC407	8-759-320-87	s	IC HM63021P-28
IC409	8-759-035-93	s	IC TC7S32F-TE85L
IC410	8-759-035-93	s	IC TC7S32F-TE85L
IC501	8-741-602-11	s	IC SBX1602A
IC502	8-759-948-53	s	IC MB766P
IC504	8-759-001-25	s	IC MC10125L

NOTE: Please see page 9-1 for the parts that are not listed in the parts list.

(XPT-3 BOARD)

Ref. No. or Q'ty	Part No.	SP	Description
IC505	8-759-071-82	s	IC CXD8364Q
IC506	8-759-320-87	s	IC HM63021P-28
IC507	8-759-320-87	s	IC HM63021P-28
IC509	8-759-035-93	s	IC TC7S32F-TE85L
IC510	8-759-035-93	s	IC TC7S32F-TE85L
IC601	8-741-602-11	s	IC SBX1602A
IC602	8-759-948-53	s	IC MB766P
IC604	8-759-001-25	s	IC MC10125L
IC605	8-759-071-82	s	IC CXD8364Q
IC606	8-759-320-87	s	IC HM63021P-28
IC607	8-759-320-87	s	IC HM63021P-28
IC609	8-759-035-93	s	IC TC7S32F-TE85L
IC610	8-759-035-93	s	IC TC7S32F-TE85L
IC701	8-741-602-11	s	IC SBX1602A
IC702	8-759-948-53	s	IC MB766P
IC704	8-759-001-25	s	IC MC10125L
IC705	8-759-071-82	s	IC CXD8364Q
IC706	8-759-320-87	s	IC HM63021P-28
IC707	8-759-320-87	s	IC HM63021P-28
IC709	8-759-035-93	s	IC TC7S32F-TE85L
IC710	8-759-035-93	s	IC TC7S32F-TE85L
IC801	8-741-602-11	s	IC SBX1602A
IC802	8-759-948-53	s	IC MB766P
IC804	8-759-001-25	s	IC MC10125L
IC805	8-759-071-82	s	IC CXD8364Q
IC806	8-759-320-87	s	IC HM63021P-28
IC807	8-759-320-87	s	IC HM63021P-28
IC809	8-759-035-93	s	IC TC7S32F-TE85L
IC810	8-759-035-93	s	IC TC7S32F-TE85L
IC902	8-759-513-68	s	IC CXD8258Q
IC903	8-759-513-68	s	IC CXD8258Q
IC904	8-759-513-68	s	IC CXD8258Q
IC905	8-759-513-68	s	IC CXD8258Q
IC906	8-759-513-68	s	IC CXD8258Q
IC907	8-759-513-68	s	IC CXD8258Q
L2	1-421-370-00	s	COIL, CHOKE
L101	1-412-026-11	s	INDUCTOR, CHIP 1uH
L201	1-412-026-11	s	INDUCTOR, CHIP 1uH
L301	1-412-026-11	s	INDUCTOR, CHIP 1uH
L401	1-412-026-11	s	INDUCTOR, CHIP 1uH
L501	1-412-026-11	s	INDUCTOR, CHIP 1uH
L601	1-412-026-11	s	INDUCTOR, CHIP 1uH
L701	1-412-026-11	s	INDUCTOR, CHIP 1uH
L801	1-412-026-11	s	INDUCTOR, CHIP 1uH
Q11	8-729-216-22	s	TRANSISTOR 2SA1162
Q101	8-729-143-46	s	TRANSISTOR 2SC3356-R24
Q102	8-729-601-58	s	TRANSISTOR 2SC3053-C
Q104	8-729-601-58	s	TRANSISTOR 2SC3053-C
Q201	8-729-143-46	s	TRANSISTOR 2SC3356-R24
Q202	8-729-601-58	s	TRANSISTOR 2SC3053-C
Q204	8-729-601-58	s	TRANSISTOR 2SC3053-C
Q301	8-729-143-46	s	TRANSISTOR 2SC3356-R24
Q302	8-729-601-58	s	TRANSISTOR 2SC3053-C
Q304	8-729-601-58	s	TRANSISTOR 2SC3053-C
Q401	8-729-143-46	s	TRANSISTOR 2SC3356-R24
Q402	8-729-601-58	s	TRANSISTOR 2SC3053-C
Q404	8-729-601-58	s	TRANSISTOR 2SC3053-C
Q501	8-729-143-46	s	TRANSISTOR 2SC3356-R24
Q502	8-729-601-58	s	TRANSISTOR 2SC3053-C

(XPT-3 BOARD)

Ref. No. or Q'ty	Part No.	SP	Description
Q504	8-729-601-58	s	TRANSISTOR 2SC3053-C
Q601	8-729-143-46	s	TRANSISTOR 2SC3356-R24
Q602	8-729-601-58	s	TRANSISTOR 2SC3053-C
Q604	8-729-601-58	s	TRANSISTOR 2SC3053-C
Q701	8-729-143-46	s	TRANSISTOR 2SC3356-R24
Q702	8-729-601-58	s	TRANSISTOR 2SC3053-C
Q704	8-729-601-58	s	TRANSISTOR 2SC3053-C
Q801	8-729-143-46	s	TRANSISTOR 2SC3356-R24
Q802	8-729-601-58	s	TRANSISTOR 2SC3053-C
Q804	8-729-601-58	s	TRANSISTOR 2SC3053-C
R13	1-216-679-11	s	METAL, CHIP 15K 0.5% 1/10W
R17	1-216-295-00	s	METAL, CHIP 0
R90	1-216-659-11	s	METAL, CHIP 2.2K 0.5% 1/10W
R91	1-216-659-11	s	METAL, CHIP 2.2K 0.5% 1/10W
R105	1-216-659-11	s	METAL, CHIP 2.2K 0.5% 1/10W
R106	1-216-679-11	s	METAL, CHIP 15K 0.5% 1/10W
R107	1-216-655-11	s	METAL, CHIP 1.5K 0.5% 1/10W
R108	1-216-678-11	s	METAL, CHIP 13K 0.5% 1/10W
R152	1-216-660-11	s	METAL, CHIP 2.4K 0.5% 1/10W
R205	1-216-659-11	s	METAL, CHIP 2.2K 0.5% 1/10W
R206	1-216-679-11	s	METAL, CHIP 15K 0.5% 1/10W
R207	1-216-655-11	s	METAL, CHIP 1.5K 0.5% 1/10W
R208	1-216-678-11	s	METAL, CHIP 13K 0.5% 1/10W
R252	1-216-660-11	s	METAL, CHIP 2.4K 0.5% 1/10W
R305	1-216-659-11	s	METAL, CHIP 2.2K 0.5% 1/10W
R306	1-216-679-11	s	METAL, CHIP 15K 0.5% 1/10W
R307	1-216-655-11	s	METAL, CHIP 1.5K 0.5% 1/10W
R308	1-216-678-11	s	METAL, CHIP 13K 0.5% 1/10W
R352	1-216-660-11	s	METAL, CHIP 2.4K 0.5% 1/10W
R405	1-216-659-11	s	METAL, CHIP 2.2K 0.5% 1/10W
R406	1-216-679-11	s	METAL, CHIP 15K 0.5% 1/10W
R407	1-216-655-11	s	METAL, CHIP 1.5K 0.5% 1/10W
R408	1-216-678-11	s	METAL, CHIP 13K 0.5% 1/10W
R452	1-216-660-11	s	METAL, CHIP 2.4K 0.5% 1/10W
R505	1-216-659-11	s	METAL, CHIP 2.2K 0.5% 1/10W
R506	1-216-679-11	s	METAL, CHIP 15K 0.5% 1/10W
R507	1-216-655-11	s	METAL, CHIP 1.5K 0.5% 1/10W
R508	1-216-678-11	s	METAL, CHIP 13K 0.5% 1/10W
R552	1-216-660-11	s	METAL, CHIP 2.4K 0.5% 1/10W
R605	1-216-659-11	s	METAL, CHIP 2.2K 0.5% 1/10W
R606	1-216-679-11	s	METAL, CHIP 15K 0.5% 1/10W
R607	1-216-655-11	s	METAL, CHIP 1.5K 0.5% 1/10W
R608	1-216-678-11	s	METAL, CHIP 13K 0.5% 1/10W
R652	1-216-660-11	s	METAL, CHIP 2.4K 0.5% 1/10W
R705	1-216-659-11	s	METAL, CHIP 2.2K 0.5% 1/10W
R706	1-216-679-11	s	METAL, CHIP 15K 0.5% 1/10W
R707	1-216-655-11	s	METAL, CHIP 1.5K 0.5% 1/10W
R708	1-216-678-11	s	METAL, CHIP 13K 0.5% 1/10W
R752	1-216-660-11	s	METAL, CHIP 2.4K 0.5% 1/10W
R805	1-216-659-11	s	METAL, CHIP 2.2K 0.5% 1/10W
R806	1-216-679-11	s	METAL, CHIP 15K 0.5% 1/10W
R807	1-216-655-11	s	METAL, CHIP 1.5K 0.5% 1/10W
R808	1-216-678-11	s	METAL, CHIP 13K 0.5% 1/10W
R852	1-216-660-11	s	METAL, CHIP 2.4K 0.5% 1/10W
TH10	1-809-179-11	s	THERMISTOR 1k 102AT-2

NOTE: Please see page 9-1 for the parts that are not listed in the parts list.

9-5. PACKING MATERIALS & SUPPLIED ACCESSORIES (For DVS-6000/6000C)

PACKING MATERIALS & SUPPLIED ACCESSORIES

Ref. No. or Q'ty	Part No.	SP	Description
For DVS-6000/6000C			
1	⚠1-506-411-21	s	ADAPTOR, AC PLUG 3P-2P
1	⚠1-557-377-11	s	CORD, POWER
1	1-695-542-11	o	RESISTOR,CONNECTOR TERMINATION
1	2-990-242-01	s	HOLDER (B), PLUG
1	3-701-634-00	o	BAG, POLYETHYLENE
1	3-701-648-00	s	BAG, POLYETHYLENE

9-6. PACKING MATERIALS & SUPPLIED ACCESSORIES (For BKDS-6010)

PACKING MATERIALS & SUPPLIED ACCESSORIES

Ref. No. or Q'ty	Part No.	SP	Description
For BKDS-6010			
1	⚠1-506-411-21	s	ADAPTOR, AC PLUG 3P-2P
1	⚠1-557-377-11	s	CORD, POWER
1	2-990-242-01	s	HOLDER (B), PLUG
2	3-678-081-01	o	TIP (1), SW
7	3-678-082-01	o	TIP (2), SW

9-7. OPTIONAL FIXTURE

OPTIONAL FIXTURE

Part No.	SP	Description
1pc	A-6279-727-A	o EX-209 ASSY
The EX-209 ASSY is composed of the following parts.		
	A-6279-728-A	o RAIL (R) ASSY
	A-6279-729-A	o RAIL (L) ASSY
	3-166-184-01	o LEVER, PC BOARD
	3-167-578-01	o NUT, PLATE
	3-167-579-01	o LEVER, PC BOARD
	3-167-586-01	o PLATE, SHIELD
	7-621-773-87	s SCREW +B 2.6X10
	7-626-320-11	s PIN, SPRING 3X8
	7-682-903-01	s SCREW +PHW 3X5
	7-682-948-01	s SCREW +PSW 3X8
	7-682-949-01	s SCREW +PSW 3X10
	1-565-207-21	s CONNECTOR, DIN 128P, MALE
	1-565-205-12	o CONNECTOR, DIN 128P, FEMALE
	1-565-207-21	s CONNECTOR, DIN 128P, MALE
	1-565-205-12	o CONNECTOR, DIN 128P, FEMALE
	1-506-748-11	s CONNECTOR, DIN 96P, MALE
	1-563-341-11	s CONNECTOR, DIN 96P, FEMALE
1pc	J-6186-270-A	o CABLE, DIGITAL TP
1pc	J-6264-360-A	o CABLE, BNC-UM

NOTE: Please see page 9-1 for the parts that are not listed in the parts list.